Solutions Manual to accompany Millman

MICROELECTRONICS

Digital and Analog Circuits and System

Prepared by:
THOMAS V. PAPATHOMAS
with the assistance of
MURRAY L. BOD

McGraw-Hill

CHAPTER 1

1-1 (a) From Eq. (1-6) for an accelerating potential $V_d = -V$, $\frac{1}{2}mv_o^2 = \frac{1}{2}mv^2 - qV$. For $v_o = 0$ we have

$$V = mv^2/2q = \frac{9.11\times10^{-31}\times(1.88\times10^{7})^2}{2\times(1.60\times10^{-19})} = \underline{1006\ V}$$

(b) Eq. (1-6) gives for a positive charge and a negative potential V: $\frac{1}{2}m'v^2 = \frac{1}{2}m'v^2 + qV$

From Appendix A, $m' = 2.01\times1.66\times10^{-27}$
$= 3.337\times10^{-27}$ kg.

$$v = \sqrt{v_o^2 + \frac{2qV}{m'}} = \sqrt{10^{10} + \frac{2\times1.60\times10^{-19}\times1006}{3.337\times10^{-27}}} = \underline{3.27\times10^{5}\ m/s}$$

1-2 (a) Since $1eV = 1.60\times10^{-19}$ J, the initial energy of the electron in eV is $10^{-17}/1.60\times10^{-19} = \underline{62.5\ eV}$
Since the retarding potential is -65V, the electron will <u>not</u> reach the second plate.

(b) <u>62.5 V</u>

1-3 (a) Let $v_o = 0$ in Eq. (1-6) to obtain:

$$\frac{1}{2}mv_x^2 = qV_a \quad \text{or} \quad v_x = \sqrt{\frac{2qV_a}{m}}$$

(b) As soon as the electron enters the vertical field of the parallel plates P_1P_2 it is accelerated upward with a constant accelaration a_y, which is found as follows:

$$ma_y = qE_y = q\frac{V_p}{d} \quad \text{or} \quad a_y = \frac{qV_p}{md}$$

Therefore, its velocity upon leaving the plates P_1P_2 is

$$v_y = a_y t_p$$

where t_p is the time for crossing the plates i.e.

$$t_p = \ell_d/v_x$$

From the above equations, $v_y = \frac{qV_p\ell_d}{mdv_x}$

(c) $d_s = y_p + y_s$ where y_p and y_s are the distances in the y-direction traveled at the end of t_p and t_s (=time it takes an electron to hit the screen after exiting from the plates P_1P_2), respectively.

$$d_s = \frac{1}{2}a_y t_y^2 + v_y t_s = \frac{1}{2}\left(\frac{qV_p}{md}\right)\left(\frac{\ell_d}{v_x}\right)^2 + \left(\frac{qV_p\ell_d}{mdv_x}\right)\left(\frac{\ell_s - \ell_d/2}{v_x}\right)$$

$$d_s = \frac{1}{v_x^2}\frac{qV_p}{md}\left[\frac{1}{2}\ell_d^2 + \ell_d(\ell_s - \ell_d/2)\right] = \frac{1}{v_x^2}\frac{qV_p}{md}\ell_d\ell_s$$

Substituting for v_x the expression found in part (a) we get

$$d_s = \frac{m}{2qV_a}\frac{qV_p}{md}\ell_d\ell_s = \frac{1}{2}\frac{\ell_d\ell_s}{d}\frac{V_p}{V_a}$$

(d) $$v_x = \sqrt{\frac{2\times1.60\times10^{-19}\times1000}{9.11\times10^{-31}}} = \sqrt{3.513\times10^{14}} = \underline{1.874\times10^{7}\ m/s}$$

$$v_y = \frac{qV_p\ell_d}{mdv_x} = \frac{1.60\times10^{-19}\times100\times1.27\times10^{-2}}{9.11\times10^{-31}\times0.5\times10^{-2}\times1.874\times10^{7}}$$

$$= \underline{2.38\times10^{6}\ m/s}$$

$$d_s = \frac{1}{2}\times\frac{1.27\times20}{0.5}\times\frac{100}{1000} = \underline{2.54\ cm}$$

(e) Since, from part (c), V_a is inversely proportional to d_s then $V_a = \frac{2.54}{5}\times1000 = \underline{508\ V}$

1-4

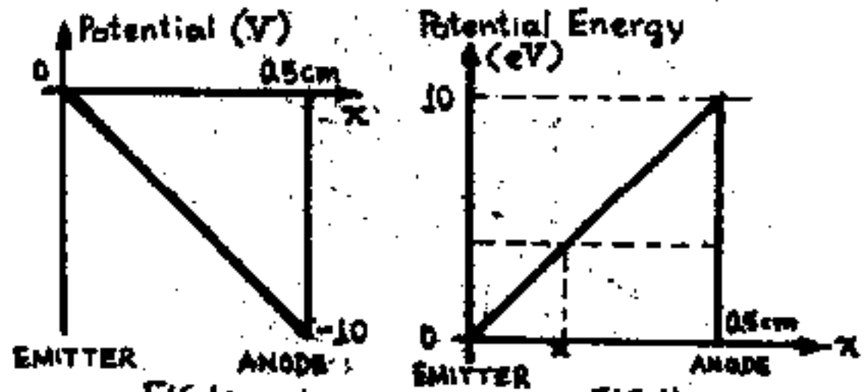

Fig 1a Fig 1b

(a) Total energy of electron at the emitter = W_E, where

$$W_E = \frac{1}{2}mv_o^2 + qV = \frac{1}{2}9.11\times10^{-31}\times10^{12} + 0$$

$$= 4.555\times10^{-19}\ J = \frac{4.555\times10^{-19}}{1.6\times10^{-19}}\ eV = \underline{2.85\ eV}$$

We have

$$\frac{x}{0.5} = \frac{2.85}{10} \quad \text{or} \quad x = \frac{2.85}{10}\times0.5 = \underline{0.143\ cm}$$

(b) The electron must have $W_E = 10eV = 10\times1.6\times10^{-19}$ J
$= 1.6\times10^{-18}$ J

$$W_E = \frac{1}{2}mv_o^2 + qV = \frac{1}{2}mv_o^2 \quad \text{or}$$

$$v_o = \sqrt{\frac{2W_E}{m}} = \sqrt{\frac{2\times1.6\times10^{-18}}{9.11\times10^{-31}}} = \underline{1.874\times10^{6}\ m/s}$$

1-5

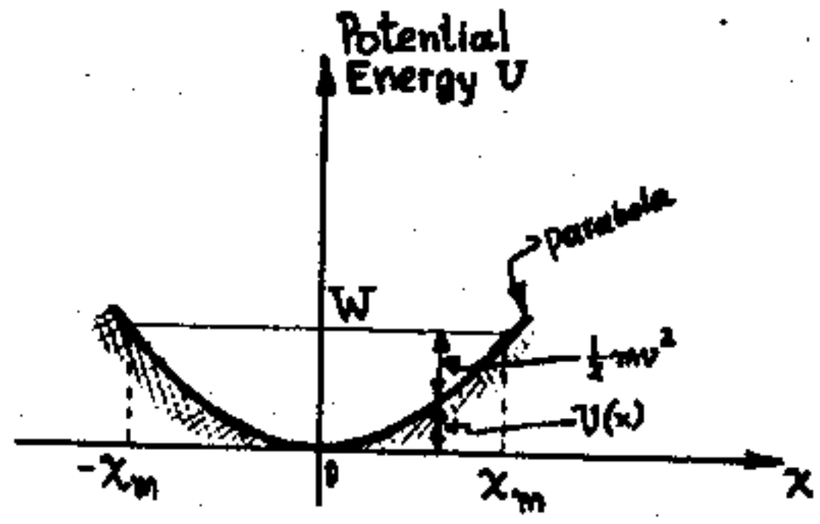

FIG 2

The potential energy as a function of x is given by

$$U(x) = -\int_0^x f(z)dz = \int_0^x kz\,dz = \frac{1}{2}kx^2$$

and it is shown in Fig. 2.

If we let W be the total energy we have $W = \frac{1}{2}mv^2 + U = \frac{1}{2}mv^2 + \frac{1}{2}kx^2$ as shown in Fig. 2.

The maximum displacement x_m occurs when $v=0$ or $x_m = \sqrt{\frac{2W}{k}}$

The particle will move between x_m and $-x_m$ and its speed will be a maximum at $x = 0$.

1-6

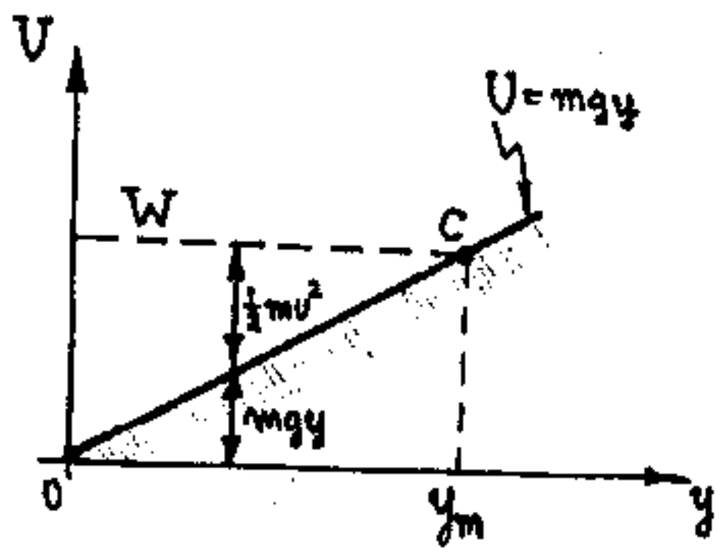

FIG 3

(a) $U = mgy$

The maximum height y_m occurs at the point where $v = 0$. From Eq. (1-5),

$$W = \text{constant} = \frac{1}{2}mv_o^2 = mgy_m$$

or $y_m = v_o^2/2g$

(b) This is clear in Fig. 3; at the point of reversal C where $v=0$, we have a "collision" with the potential barrier.

1-7 By definition, the weight of an atom of a certain element is equal to its atomic weight times the weight of "unit atomic weight", i.e. weight of an atom = AM, and

$$n = \left(\frac{\#\text{atoms}}{AM}\right)\left(\nu\,\frac{\text{electrons}}{\text{atom}}\right)\left(d\,\frac{kg}{m^3}\right) = \frac{d\nu}{AM}\ \text{electrons/m}^3$$

Again, by definition, the molecular weight is equal to the weight of one mole of a substance (in grams). Thus, if there are a_m atoms/molecule, we have Molecular weight = $a_m A$ and

$$n = \left(\frac{1}{a_m A}\right)\left(\frac{\text{mole}}{g}\right)\left(10^3\,\frac{g}{kg}\right)\left(A_o\ \frac{\text{molecules}}{\text{mole}}\right)$$

$$\left(a_m\,\frac{\text{atoms}}{\text{molecule}}\right)\left(d\,\frac{kg}{m^3}\right)\left(\nu\,\frac{\text{electrons}}{\text{atom}}\right)$$

or $n = \frac{10^3 A_o d\nu}{A}$ electrons/m^3

1-8 The resistance of the wire is

$$R = \rho\ell/A = \frac{3.44\times10^{-8}\times0.5}{\pi\times(1\times10^{-3})^2} = 5.48\times10^{-3}\,\Omega$$

Finally, $V = RI = 5.48\times10^{-3}\times30\times10^{-3} = \underline{1.64\times10^{-4}\,V}$

1-9 The cross section area A of the wire is

$$A = \pi r^2 = 3.14\times(1.03\times10^{-3}/2)^2 = 8.33\times10^{-7}\,m^2$$

(a) $I = JA = 2\times10^6\times8.33\times10^{-7} = \underline{1.666\,A}$

(b) $v = J/nq = \frac{2\times10^6}{8.40\times10^{28}\times1.6\times10^{-19}} = \underline{1.488\times10^{-4}\,m/s}$

(c) ϵ is the voltage per unit length, i.e.

ϵ = Voltage drop in 1m = I x Resistance of 1m

$= 1.666\times0.0214 = 0.0357$ V/m, and

$\mu = v/\epsilon = 1.488\times10^{-4}/0.0357 = \underline{4.17\times10^{-3}\,m^2/V\text{-}s}$

(d) Finally, $\sigma = nq\mu = 8.40\times10^{28}\times1.60\times10^{-19}\times4.17\times10^{-3} =$

$= \underline{5.61\times10^7\,(\Omega\text{-}m)^{-1}}$

1-10 (a) The energy of an electron of mass m which is moving with an average drift velocity v is

$$W = \frac{1}{2}mv^2 = \frac{1}{2}m(\mu_n\epsilon)^2$$

If m is in kg, μ in m^2/V-s and ϵ in V/m, then

$$W = \frac{\frac{1}{2}m\mu_n^2\epsilon^2\ J}{1.6\times10^{-19}\,J/eV} = \frac{m\mu_n^2\epsilon^2}{3.2\times10^{-19}} = 1\,eV$$

Using μ_n from Table 1-1

$$\epsilon = \left[\frac{3.2\times10^{-19}}{9.11\times10^{-31}\times(1300\times10^{-4})^2}\right]^{1/2} = 4.56\times10^6\,V/m$$

$$= \underline{45.6\,kV/cm}$$

(b) Since the energy to break a covalent bond in Silicon is 1.1eV (Sec. 1-5) and the required voltage is 45.6kV/cm, we see that it is not practical to generate electron-hole pairs by applying a voltage.

1-11 1.23×10^{23} electrons/cm^3 = (6.02×10^{23} atoms/mole) x (1 mole/184 g) x (18.8 g/cm^3) x (ν electrons/atom) or

$$\nu = \frac{1.23}{6.02}\times\frac{184}{18.8} = 2$$

1-12 (a) $n = 6.02\times10^{23}\,\frac{\text{atoms}}{\text{mole}}\times\frac{1\,\text{mole}}{63.54g}\times\frac{8.9g}{cm^3}\times\frac{10^6\,cm^3}{m^3}\times$

$$1\,\frac{\text{electron}}{\text{atom}} = 8.436\times10^{28}\,\text{electrons/m}^3$$

From Eq. (1-15) $\sigma = nq\mu = 8.436\times10^{28}\times1.60\times10^{-19}\times$

$34.8\times10^{-4} = \underline{4.697\times10^7\,(\Omega\text{-cm})^{-1}}$

(b) $v_{drift} = \mu\epsilon = (34.8\times10^{-4})(500) = \underline{1.74\,m/s}$

1-13 $n = 6.02\times10^{23}\,\frac{\text{atoms}}{\text{mole}}\times\frac{1\,\text{mole}}{26.98g}\times\frac{3\,\text{electrons}}{\text{atom}}\times\frac{2.70g}{cm^3}$

$$1.81\times10^{23}\,\frac{\text{electrons}}{cm^3}$$

From Eq. (1-15) $\mu = \frac{\sigma}{nq} = \frac{1}{nq\rho} =$

$(1.81\text{x}10^{23}\text{x}1.60\text{x}10^{-19}\text{x}3.44\text{x}10^{-6})^{-1} = \underline{10\text{cm}^2/\text{V-s}}$

1-14(a) Using Eq's(1-19) and (1-20) we get

$p^2 + (N_D - N_A)p - n_i^2 = 0$ or

$p = \frac{-(N_D-N_A) \pm \sqrt{(N_D-N_A)^2 + 4n_i^2}}{2}$; choose the "+" sign since $p > 0$.

Substituting for $(N_D - N_A)$ the value $(2-3)\text{x}10^{14} =$

$-1\text{x}10^{14}\text{atoms/cm}^3$

and for $n_i^2 = (2.5\text{x}10^{13}\text{atoms/cm}^3)^2 =$

$6.25\text{x}10^{26}\text{atoms}^2/\text{cm}^6$ we get

$$p = \frac{1\text{x}10^{14} + \sqrt{10^{28} + 2.5\text{x}10^{27}}}{2} = \frac{10^{14} + \sqrt{1.25\text{x}10^{28}}}{2} =$$

$\underline{1.06\text{x}10^{14}\text{ holes/cm}^3}$

Eq. (1-20) yields $n = p + N_D - N_A = 1.06\text{x}10^{14} - 1.\text{x}10^{14} =$

$= 0.06\text{x}10^{14} = \underline{6\text{x}10^{12}\text{ electrons/cm}^3}$

Therefore the sample is p-type.

(b) From Eq. (1-20) and the fact that $N_D = N_A$ we get $n = P$, hence we get from Eq.(1-19) $n^2 = p^2 = n_i^2$ or

$n = p = n_i = \underline{2.5\text{x}10^{13}\text{ electrons/cm}^3}$

and we have intrinsic Germanium by compensation

(c) Here, since $N_A \ll N_D$, we have $n \gg p$ and Eq. (1-20) yields

$n \approx N_D = \underline{10^{16}\text{ electrons/cm}^3}$

Now, from Eq.(1-19) $p = n_i^2/n = 6.25\text{x}10^{26}/10^{16} =$

$\underline{6.25\text{x}10^{10}\text{ holes/cm}^3}$

Clearly, the sample is n-type.

1-15 (a) In this part we have $p_p \gg n_p$, and

$\sigma = \frac{1}{\rho} = q(n_p\mu_n + p_p\mu_p)$

becomes $\frac{1}{\rho} \approx qp_p\mu_p = \frac{1}{0.02\text{x}1.6\text{x}10^{-19}\text{x}1800} =$

$\underline{1.736\text{x}10^{17}\text{ holes/cm}^3}$

Finally, from Eq(1-19), $n_p = n_i^2/p_p \approx \underline{3.6\text{x}10^9\text{ electrons/cm}^3}$

(b) Here $p_n \ll n_n$, and Eq(1-26) gives $\frac{1}{\rho} \approx qn_n\mu_n$ or

$n_n \approx \frac{1}{1.6\text{x}10^{-19}\text{x}20\text{x}1300} = \underline{2.40\text{x}10^{14}\text{ electrons/cm}^3}$

and $p_n = n_i^2/n_n = (1.5\text{x}10^{10})^2/2.4\text{x}10^{14} = \underline{9.375\text{x}10^5\text{ holes/cm}^3}$

1-16 (a) $n = p = n_i$. From Eq. (1-26) and Table 1-1

$\sigma = qn_i(\mu_n + \mu_p) = 1.60\text{x}10^{-19}\text{x}2.5\text{x}10^{13}\text{x}(3800+1800) =$

$\underline{2.24\text{x}10^{-2}}$ Ω-cm

$\rho = \frac{1}{\sigma} = \underline{44.64\ \Omega\text{-cm}}$

(b) From Table 1-1, $n_{GE} = 4.4\text{x}10^{22}\text{atoms/cm}^3$

$n \approx N_D = n_{GE}/10^8 = 4.4\text{x}10^{14}\text{atoms/cm}^3$

$p = n_i^2/n = 6.25\text{x}10^{26}/4.4\text{x}10^{14} = 1.42\text{x}10^{12}\text{holes/cm}^3$

Finally $\rho = \frac{1}{\sigma} = \frac{1}{q(\mu_p p + \mu_n n)}$

$= \frac{1}{1.60\text{x}10^{-19}(1800\text{x}1.42\text{x}10^{12} + 3800\text{x}4.4\text{x}10^{14})} =$

$\underline{3.73\ \Omega\text{-cm}}$

1-17 (a) $n = p = n_i$. From Eq. (1-26) and Table 1-1

$\rho = \frac{1}{\sigma} = \frac{1}{qn_i(\mu_p + \mu_n)} = \frac{1}{1.60\text{x}10^{-19}\text{x}1.5\text{x}10^{10}\text{x}(1300+500)}$

$= \underline{2.315\ \Omega\text{-cm}}$

(b) Assuming that, with the additionof donor atoms, $N_D \approx n \gg p$, $\sigma = qn\mu_n$ and $n = \frac{\sigma}{q\mu_n} = \frac{1}{\rho q \mu_n} =$

$\frac{1}{9.6\text{x}1.60\text{x}10^{-19}\text{x}1300} = 5.0\text{x}10^{14}/\text{cm}^3$

From Table 1-1, the concentration of silicon is $5.0\text{x}10^{22}/\text{cm}^3$, and therefore there are

$\frac{5.0\text{x}10^{14}}{5.0\text{x}10^{22}} = \underline{1\text{ donor atom per }10^8\text{ Si atoms}}$

1-18 Use $R = \rho\frac{\ell}{A}$, where

$\ell = 5$ cm, $A = 2\text{x}4\text{mm}^2 = 8\text{x}10^{-2}\text{cm}^2$, and proceeding as in Prob. 1-17a we find $\rho = 2.315\text{x}10^5\ \Omega$-cm

Hence

$R = 2.315\text{x}10^5\text{x}5/8\text{x}10^{-2} = \underline{1.447\text{x}10^7\ \Omega}$

1-19 For intrinsic material $\sigma = q(\mu_p + \mu_n)n_i$

Therefore, assuming a slow variation in μ, we have $\frac{d\sigma}{\sigma} = \frac{dn_i}{n_i} = d[\ln n_i(T)]$ (1). An expression for $\ln[n_i(T)]$ is found from $n_i(T) = A_o^{1/2}\ T^{3/2} e^{-E_{GO}/2kT}$

(1-27)

$$\ln[n_i(T)] = \frac{1}{2}\ln A_o + \frac{3}{2}\ln T + \frac{E_{GO}}{2kT} \qquad (2)$$

From Eq's(1) and (2) $\frac{d\sigma}{\sigma} = \frac{3dT}{2T} + \frac{E_{GO}dT}{2kT^2} =$

$\left(\frac{3}{2} + \frac{E_{GO}}{2kT}\right)\frac{dT}{T}$

At $T = 300$K we have $kT = (8.62\text{x}10^{-5}\text{eV/K})\ 300\text{K} =$ 0.0259eV and from Table 1-1 $E_{GO} = 1.21$eV for Si. Hence

$\frac{d\sigma}{\sigma} = \left(\frac{3}{2} + \frac{1.21}{0.0518}\right)\left(\frac{1}{300}\right)(100\%) = \underline{8.286\%\text{ per degree K.}}$

1-20 Proceeding as in Prob. 1-19, with $E_{GO} = 0.785$ eV for Ge,

$\frac{d\sigma}{\sigma} = \left(\frac{3}{2} + \frac{0.785}{0.0518}\right)\left(\frac{1}{300}\right)(100\%) = \underline{5.551\%\text{ per degree K.}}$

1-21 The equations from which p and n are determined are

$$np = n_i^2 \quad (1\text{-}19) \quad \text{and} \quad p + N_D = n + N_A \quad (1\text{-}20)$$

Here $N_D = 1.874\times10^{13}/cm^3$ and $N_A = 3.748\times10^{13}/cm^3$ and $n_i(T)$ is given by $n_i^2(T) = A_o T^3 e^{-E_{GO}/kT}$ (1-27)

from which

$$\frac{n_i^2(500K)}{n_i^2(300K)} = \frac{500^3}{300^3}\exp\left[(-E_{GO}/k)\left(\frac{1}{500} - \frac{1}{300}\right)\right] =$$

$$4.630\exp\left[(1.21/8.62\times10^{-5})\times0.00133\right] =$$

$$4.630\times1.349\times10^8 = 6.246\times10^8$$

Hence $n_i^2(500K) = 6.246\times10^8\times(1.5\times10^{10})^2 = 1.405\times10^{29}/cm^3$

From Eq's (1-19) and (1-20)

$$n[(n+(N_A-N_D)] = n_i^2 \quad \text{or} \quad n^2+(N_A-N_D)n-n_i^2 = 0$$

$$n = \frac{-(N_A-N_D)}{2} + \frac{\sqrt{(N_A-N_D)^2+4n_i^2}}{2} =$$

$$\frac{-1.874\times10^{13}}{2} + \frac{\sqrt{(1.874\times10^{13})^2+4\times1.405\times10^{29}}}{2} = 3.656\times10^{14} \text{ per cm}^3$$

$$p = n_i^2/n = 1.405\times10^{29}/3.656\times10^{14} = 3.843\times10^{14}/cm^3$$

Hence the material is practically <u>intrinsic.</u> The reason why the sample is intrinsic is that $n_i = 3.748\times10^{14}/cm^3$ which is much greater than N_A or N_D

1-22 We have to find n and p [from Eqs. (1-19) and (1-20)] but we need n_i, which is found from Eq. (1-26) with $n=p=n_i$

$$n_i = \frac{\sigma}{q(\mu_n+\mu_p)} = \frac{1}{60\times1.60\times10^{-19}\times(3800+1800)} =$$

$$1.86\times10^{13} \text{ atoms}/cm^3$$

Now, from Eqs. (1-19) and (1-20) we find (as in prob. 1-21)

$$n = \frac{-(N_A-N_D)}{2} + \frac{\sqrt{(N_A-N_D)^2+4n_i^2}}{2} = \frac{3\times10^{13}}{2} + \frac{4.78\times10^{13}}{2} =$$

$$3.89\times10^{13} \text{ electrons}/cm^3$$

$$p = n_i^2/n = (1.86\times10^{13})^2/3.89\times10^{13} = 8.89\times10^{12} \text{ holes}/cm^3$$

Hence the conductivity of the sample

$$\sigma = q(n\mu_n+p\mu_p) = 1.6\times10^{-19}(3.89\times10^{13}\times3800+8.89\times10^{12}\times1800)$$

$$= 2.62\times10^{-2}$$

Finally, from Eq. (1-14) we have

$$\epsilon = \frac{J}{\sigma} = \frac{52.3 mA/cm^2}{2.62\times10^{-2}/\Omega\text{-cm}} \quad \text{or}$$

$$\epsilon = 1.996\times10^3 (mA\cdot\Omega)/cm = 1.996\times10^3 mV/cm = \underline{1.996 V/cm}$$

1-23 (a) Using Table 1-1

$$\text{Concentration} = 6.02\times10^{23}\frac{\text{atoms}}{\text{mole}}\times\frac{1 \text{ mole}}{72.6g}\times\frac{5.32g}{cm^3}$$

$$= 4.41\times10^{22} \text{ atoms}/cm^3$$

(b) Under such circumstances, $N_D = 4.41\times10^{14}$ atoms/cm^3. Thus

$$n \approx N_D \text{ and } p = \frac{n_i^2}{n} = \frac{(2.5\times10^{13})}{4.41\times10^{14}} = 1.42\times10^{12} \text{ holes}/cm^3$$

Since $n \gg p$, $\sigma \approx nq\mu_n = 4.41\times10^{14}\times1.6\times10^{-19}\times3,800 =$

$$0.268(\Omega\text{-cm})^{-1}$$

$$\rho = \frac{1}{\sigma} = 3.72\,\Omega\text{-cm.}$$

(c) If each atom contributed one free electron to the "metal", then

$$n = 4.41\times10^{22} \text{ electrons}/cm^3, \text{ hence}$$

$$\sigma = nq\mu_n = 4.41\times10^{22}\times1,6\times10^{-19}\times3,800 = 2.58\times10^7(\Omega\text{-cm})^{-1}$$

Hence the conductivity is increased by a factor

$$\frac{2.58\times10^7}{0.268} \approx 10^8$$

1-24 The conductivity of intrinsic silicon at 300K is (from Table 1-1)

$$\sigma_i = \frac{1}{230000\Omega\text{-cm}} = 4.35\times10^{-6}(\Omega\text{-cm})^{-1}$$

If silicon were a monovalent metal, then each atom would contribute one free electron for conduction and (see Table 1-1)

$$n = 5.0\times10^{22} \text{ electrons}/cm^3$$

or

$$\sigma = qn\mu_n = 1.60\times10^{-19}\times5.0\times10^{22}\times1300 = 1.04\times10^7(\Omega\text{-cm})^{-1}$$

$$\therefore \frac{\sigma}{\sigma_i} = \underline{2.39\times10^{12}}$$

1-25 (a) $V_H = \frac{BJd}{\rho}$ with $J = \sigma\epsilon_x$ and $\rho = \frac{\sigma}{\mu}$

from which $V_H = B\epsilon_x d\mu$. Since $N_D \gg n_i = 1.5\times10^{10}$ (Table 1-1), then the bar is n-type and $\mu = \mu_n$. Hence $V_H = 0.2\times500\times5\times10^{-3}\times1300\times10^{-4} = 6.5\times10^{-2}V = \underline{65mV}$

(b) Since $N_A \gg n_i$, now $\mu = \mu_p$.

$$V_H = 0.2\times500\times5\times10^{-3}\times500\times10^{-4} = 0.025V = \underline{25mV}$$

1-26 $\mu_p = \frac{\sigma}{\rho}$ where $\sigma = \frac{1}{200,000\Omega\text{-cm}} = 5\times10^{-6}(\Omega\text{-cm})^{-1}$

From Eq. (1-31) we have $\rho = \frac{BI}{V_H w} = \frac{0.1\times5\times10^{-6}}{30\times10^{-3}\times2\times10^{-3}} =$

$$8.33\times10^{-3}C/cm^3 = \underline{8.33\times10^{-9}C/cm^3}$$

Finally $\mu_p = \frac{5\times10^{-6}}{8.33\times10^{-9}} = 600/\Omega\text{-C} = \underline{600 \text{ cm}^2/\text{V-s}}$

1-27 We find ρ from Eq. (1-32)

$$\rho = \frac{\sigma}{\mu_n} = \frac{1\times10^{-3}}{1300\times10^{-4}} = 7.692\times10^{-3}C/m^3$$

From Eq.(1-31) $B = \frac{V_H\rho w}{I} = \frac{40\times10^{-3}\times7.692\times10^{-3}\times10^{-2}}{10\times10^{-6}} =$

$$\underline{0.308\ \frac{Wb}{m^2}}$$

1-28 From the figure of this problem, we find the expression for $p(x)$ to be

$$p(x)=\begin{cases}\dfrac{p_o-p(0)}{W}x+p(0)=hx+p(0), & 0<x<W\\ p_o\ , & x>W\end{cases}$$

where $h=(p_o-p(0))/W<0$

(a) From Eq. (1-33) $J_{po}(x)=-qD_p\dfrac{dp}{dx}$ (with $\epsilon=0$)

$$J_{po}(x)=\begin{cases}-qD_p h = J_o, & 0<x<W\\ 0\ , & x>W\end{cases}$$

(b) From Eq. (1-36) $J_p=q\mu_p p\epsilon-qD_p\dfrac{dp}{dx}=0$

$$\epsilon=\frac{qD_p dp/dx}{q\mu_p p}=\frac{1}{p}\ \frac{D_p}{\mu_p}\ \frac{dp}{dx}$$

$$\epsilon_x=\begin{cases}\dfrac{1}{p}\ \dfrac{D_p}{\mu_p}h, & 0<x<W\\ \dfrac{1}{p_o}\ \dfrac{D_p}{\mu_p}0=0, & x>W\end{cases}$$

and substituting for $p(x)=hx+p(0)$ and V_T for D_p/μ_p [Eq. (1-34)] we obtain

$$\epsilon(x)=\begin{cases}\dfrac{V_T h}{hx+p(0)}\ , & 0<x<W\\ 0\ , & x>W\end{cases}$$

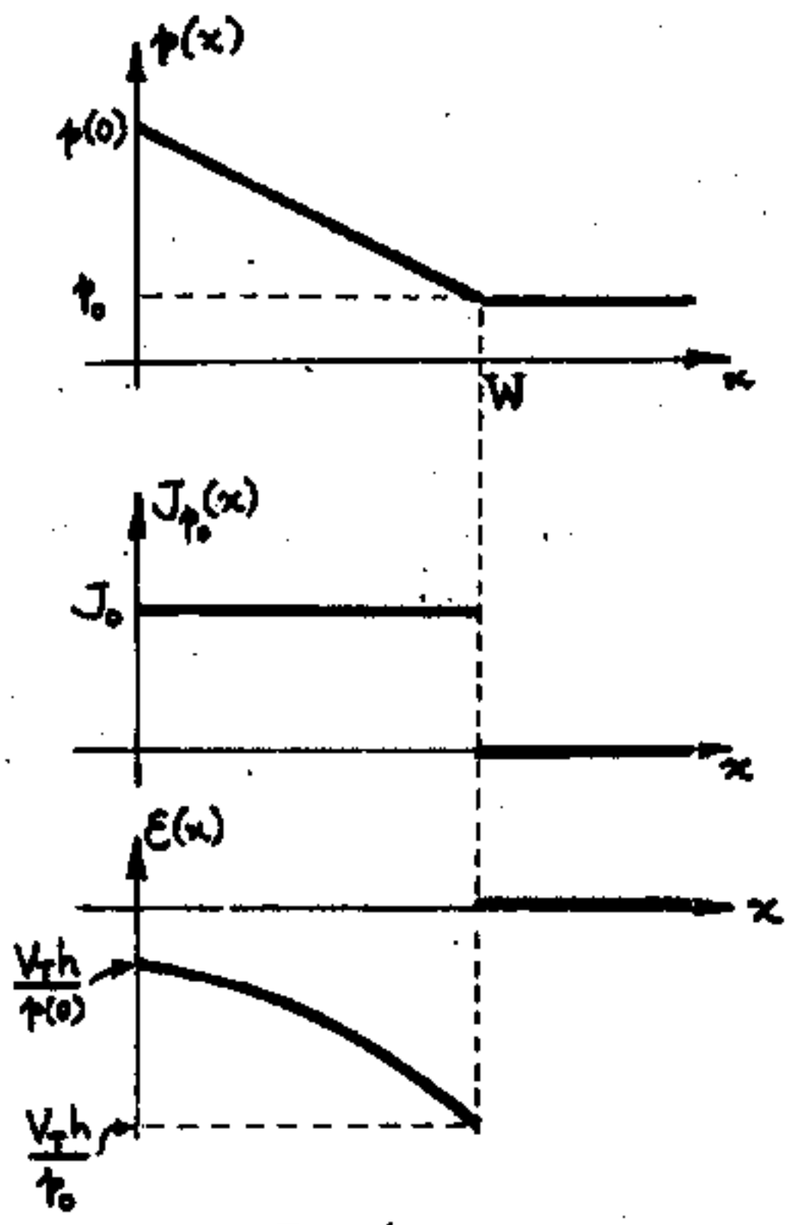

FIG 4

(c) $V=-\int_{x=0}^{W}\epsilon dx=-\int_0^W\dfrac{V_T h dx}{hx+p(0)}=-V_T\ln(hx+p(0))\Big|_0^W=$

$-V_T[\ln p_o-\ln p(0)]$; $V=-V_T\ln\dfrac{p_o}{p(0)}=-V_T\ln 10^{-3}=$

$3V_T\ln 10=3\times 25.9\text{mV}\times 2.302=\underline{178.9\text{mV}}$

1-29 (a) The overall electron current must be zero. Therefore, from Eq. (1-37)

$$J_n=0=q\mu_n n\epsilon+qD_n\frac{dn}{dx}$$

$$\epsilon=-\frac{D_n}{\mu_n n}\frac{dn}{dx}=-\frac{V_T}{n}\frac{dn}{dx}$$ where Eq. (1-34) is used

Since $\epsilon=-\dfrac{dV}{dx}$ we obtain $dV=V_T\dfrac{dn}{n}$, and integrating from x_1 to x_2

$$V_{21}=V_2-V_1=V_T\ln\frac{n_2}{n_1}=-V_T\ln\frac{n_1}{n_2}\quad\text{or}\quad n_1=n_2e^{-V_{21}/V_T}$$

(b) Using the fact that $n_2=n_n\approx N_D$ while $n_1=n_p=n_i^2/N_A$, we have for a step graded p-n junction:

$$V_o=V_T\ln\frac{n_n}{n_p}=V_T\ln\frac{N_DN_A}{n_i^2}$$

1-30 (a) From Table 1-1, the value of the concentration N of Ge atoms is 4.4×10^{28} atoms/m^3

Hence $N_A=4.4\times10^{20}$ atoms/m^3, $N_D=4.4\times10^{22}$ atoms/m^3

From Eq. (1-46)

$$V_o=V_T\ln\frac{N_AN_D}{n_i^2}=(0.0259\text{V})\ln\frac{4.4\times10^{20}\times4.4\times10^{22}}{(2.5\times10^{19})^2}=$$

$$0.0259\ln(3.1\times10^4)$$

or $V_o=0.0259\times 10.34=\underline{0.268\text{V}}$

(b) From Table 1-1

$N=5.0\times10^{28}$ atoms/m^3, $N_A=5.0\times10^{20}$/m^3, $N_D=5.0\times10^{22}$/m^3

and

$$V_o=(0.0259\text{V})\ln\frac{5.0\times5.0\times10^{42}}{(1.5\times10^{16})^2}=(0.0259\text{V})\ln(11.1\times10^{10})=$$

0.0259×25.43

or $V_o=\underline{0.659\text{V}}$

1-31 $$V_o=V_T\ln\frac{N_AN_D}{n_i^2}$$

Let $N_{D1}(V_{o1})$ = the original donor concentration (potential), and

$N_{D2}(V_{o2})$ = the new donor concentration (potential), and

$$V_{o1}=V_T\ln\frac{N_AN_{D1}}{n_i^2}\ ,\quad V_{o2}=V_T\ln\frac{N_AN_{D2}}{n_i^2}\ ,\quad\text{hence}$$

$$V_{o2}-V_{o1}=V_T\ln\frac{N_AN_{D2}}{n_i^2}-V_T\ln\frac{N_AN_{D1}}{n_i^2}=$$

$$V_{o2}-V_{o1}=V_T\ln\frac{N_AN_{D2}}{n_i^2}-V_T\ln\frac{N_AN_{D1}}{n_i^2}=$$

$$V_T\ln\frac{N_{D2}}{N_{D1}}=(0.0259\,V)\ln 10^4=0.0259\times 9.21=0.239\,V$$

1-32 (a) $\rho=\frac{1}{\sigma}=\frac{1}{N_Aq\mu_p}=2\,\Omega\text{-cm}$ or $N_A=\frac{1}{2\times1.60\times10^{-19}\times1800}$

$=1.736\times10^{15}/cm^3$. Similarly,

$$N_D=\frac{1}{1\times1.60\times10^{-19}\times3800}=1.645\times10^{15}/cm^3$$

From Eq. (1-45) $V_o=V_T\ln\frac{N_AN_D}{n_i^2}$

$$0.026\ln\frac{1.736\times10^{15}\times1.645\times10^{15}}{(2.5\times10^{13})^2}=0.026\ln(4.569\times10^3)=$$
$$=\underline{0.219\,V}$$

(b) $N_A=\frac{1}{2\times1.60\times10^{-19}\times500}=6.25\times10^{15}/cm^3$

$$N_D=\frac{1}{1\times1.60\times10^{-19}\times1300}=4.81\times10^{15}/cm^3$$

Then $V_o=0.026\ln\frac{6.25\times10^{15}\times4.81\times10^{15}}{(1.5\times10^{10})^2}=0.026\ln(1.336\times10^{11})=$
$=\underline{0.666\,V}$

CHAPTER 2

2-1 (a) $n_n\approx N_D=5\times10^{14}/cm^3$

$$p_n=\frac{n_i^2}{n_n}=\frac{(1.5\times10^{10})^2}{5\times10^{14}}=4.5\times10^5/cm^3$$

(b) $p_p\approx N_A=5\times10^{16}/cm^3$

$$n_p=\frac{n_i^2}{n_n}=\frac{(1.5\times10^{10})^2}{5\times10^{16}}=4.5\times10^3/cm^3$$

The plots are shown in Fig. 1.

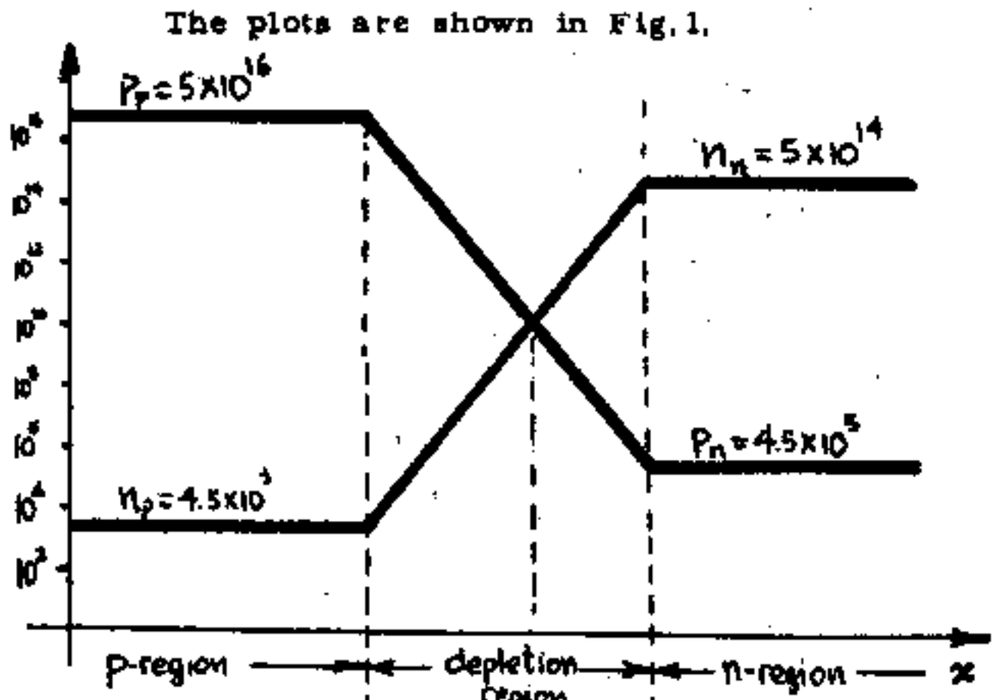

FIG 1

2-2 The sketches here are similar to those of Fig. 1 and the values of n_n and p_p are identical of those of Problem 2-1.

The only difference here is that

$$p_n=\frac{n_i^2}{n_n}=\frac{(2.5\times10^{13})^2}{5\times10^{14}}=1.25\times10^{12}/cm^3$$

and

$$n_p=\frac{n_i^2}{p_p}=\frac{(2.5\times10^{13})^2}{5\times10^{16}}=1.25\times10^{10}/cm^3$$

2-3 In the p-region $\frac{1}{\rho_p}=\sigma_p\approx q\mu_pp_p$ or $p_p=\frac{1}{\rho_pq\mu_p}$

$$p_p=\frac{1}{9.6\times1.60\times10^{-19}\times500}=1.30\times10^{15}/cm^3 \quad \text{with}$$

$$n_p=\frac{n_i^2}{p_p}=\frac{(1.5\times10^{10})^2}{1.30\times10^{15}}=1.73\times10^5/cm^3$$

In the n-region $n_n=\frac{1}{\rho_nq\mu_n}=\frac{1}{100\times1.60\times10^{-19}\times1300}=$

$4.81\times10^{13}/cm^3$ and $p_n=\frac{n_i^2}{n_n}=\frac{(1.5\times10^{10})^2}{4.81\times10^{13}}=4.68\times10^6/cm^3$

Finally, we plot curves similar to those of Prob. 2-1 (Fig. 1)

2-4 (a) $V_T=T/11{,}600=0.026V$ at 300K.

With $I=I_o(e^{V/\eta V_T}-1)$ we have

$-0.95I_o=I_o(e^{V/2\times0.026}-1)$ or $e^{V/0.052}=1-0.95=0.05$

and $V/0.052=\ln(0.05)=-2.995$ or $\underline{V=-0.156\,V}$

(b) The ratio is $\frac{I_o(e^{0.1/0.052})-1)}{I_o(e^{-0.1/0.052}-1)}=\frac{5.842}{-0.854}=\underline{-6.841}$

(c) (i) $I=10(e^{0.5/0.052}-1)=\underline{1.499\times10^5\,nA}$

(ii) $I=10(e^{0.6/0.052}-1)=\underline{1.026\times10^6\,nA}$

(iii) $I=10(e^{0.7/0.052}-1)=\underline{7.019\times10^6\,nA}$

2-5 (a) From Eq. (2-3) $0.5\,\mu A=500nA=1nA(e^{V/2\times0.026}-1)$

or $V/0.052=\ln(501)=6.217$ and $\underline{V=0.323\,V}$

(b) $I=20(e^{V/V_T}-1)=20(e^{0.323/0.026}-1)=4.970\times10^6\mu A=$
$\underline{4.97\,A}$

2-6 (a) We have, from Eq. (2-3)

$$I=I_o(\exp(0.8/0.052)-1)=I_o\times4.802\times10^6$$

$$5=I_o(\exp(0.7/0.052)-1)=I_o\times7.019\times10^5$$

Dividing the above eqs. we get $\frac{I}{5}=\frac{48.02}{7.019}$ or

$I=\underline{34.21\,mA}$

(b) From the second equation we get

$$I_o=5/7.019\times10^5=7.123\times10^{-6}mA=\underline{7.123\,nA}$$

2-7 (a) Eq. (2-3) is $I=I_o(e^{V/\eta V_T}-1)\simeq I_o e^{V/\eta V_T}$

$$I_1=I_o e^{V_1/\eta V_T} \quad ; \quad I_2=10I_1=I_o e^{V_2/\eta V_T}$$

Dividing these two equations

$$10=e^{V_2/\eta V_T}/e^{V_1/\eta V_T}=e^{(V_2-V_1)/\eta V_T}$$

with $\eta V_T = 2\times 0.026 = 0.052$,

$(V_2-V_1)/0.052=\ln 10=2.302$ and $\underline{V_2-V_1=0.12\ V}$

(b) Here, a similar approach yields

$$(V_2-V_1)=0.052\ \ln 100=\underline{0.24\ V}$$

2-8 (a) Observe that the current-axis is a logarithmic scale, hence we have to find an expression for log I in terms of V in the forward-bias region, where from Eq. (2-3) $I\simeq I_o e^{V/\eta V_T}$ or

$$\log I \simeq \log I_o+(\log e)\cdot(V/\eta V_T)=\log I_o+.434\frac{V}{\eta V_T} \qquad (1)$$

which is a linear relationship between logI and V, as shown in Fig. 2-6. We have two points on the straight line, i. e. (I=0.01 mA, V=0.4 V) and (I=10 mA, V=0.75 V). Substituting these values in Eq. (1) above, we have

$-2=\log I_o+0.434\times 0.4/\eta\times 0.026=\log I_o+6.677/\eta$

$1=\log I_o+0.434\times 0.75/\eta\times 0.026=\log I_o+12.519/\eta$

Subtracting the first of the above equations from the second one, we get

$$3=\frac{12.519-6.677}{\eta} \quad \text{or} \quad \eta=\frac{5.842}{3}\simeq\underline{1.947}$$

(b) The procedure here is the same as in part (a)

(i) $T=-55^oC=-55+273=218K$ and $V_T=\frac{T}{11,600}=0.019$

Here the points are (I=0.01mA, V=0.066V) and (I=10mA, V=0.66V) and (I=10mA, V=0.91V) and we get

$-2=\log I_o+0.434\times 0.66/\eta\times 0.019=\log I_o+15.076/\eta$

$1=\log I_o+0.434\times 0.91/\eta\times 0.019=\log I_o+20.786/\eta$

$$\text{or } 3=\frac{20.786-15.076}{\eta} \text{ and } \eta=\frac{5.710}{3}\approx\underline{1.903}$$

(ii) $T=150^oC=150+273=423K$ and $V_T=\frac{423}{11,600}=0.0365\ V$

The points are (I=0.01mA, V=0.1V), (I=10mA, V=0.55 V) and

$-2=\log I_o+0.43\times 0.1/\eta\times 0.0365=\log I_o+1.189/\eta$

$1=\log I_o+0.434\times 0.55/\eta\times 0.0365=\log I_o+6.540/\eta$

$$\text{or } 3=\frac{6.540-1.189}{\eta} \text{ and } \eta=\frac{5.351}{3}=\underline{1.784}$$

2-9 (a) From Eq. (2-5) the factor is $2^{(100-25)/10}=2^{7.5}$ $=\underline{181.1}$

(b) Here, the factor is $2^{(200-25)/10}=2^{17.5}$ $=\underline{1.854\times 10^5}$

2-10 (a) $I_o(300+\Delta T)=I_o(300)2^{\Delta T/10}$ from Eq. (2-5)

Therefore $50I_o(300)=I_o(300)2^{\Delta T/10}$ or $50=2^{\Delta T/10}$

$$\log(50)=(\Delta T/10)\log 2 \text{ or } 1.699=\frac{\Delta T}{10}\times 0.301$$

$$\Delta T=16.99/0.301=\underline{56.44\ ^oC}$$

(b) From Eq. (2-5) $0.1I_o(300)=I_o(300)2^{\Delta T/10}$

$0.1=2^{\Delta T/10}$ or $\log(0.1)=\Delta T/10\ \log 2$

$$-1=\frac{\Delta T}{10}\times 0.301 \text{ and } \Delta T=-10/.301=\underline{-33.22\ ^oC}$$

2-11 The situation is depicted in Fig. 2, where

$$I=I_o+I_R$$

Assume that I_R is totally independent of T (actually we can neglect dI_R/dT because $dI_R/dT \ll dI_o/dT$). Then

$$\frac{dI}{dT}=\frac{dI_o}{dT}$$

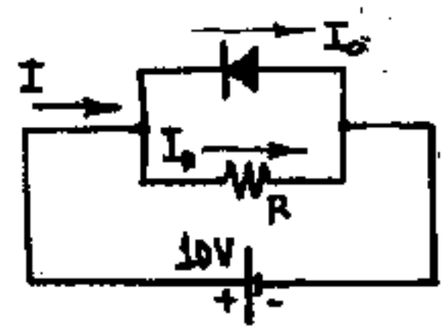

FIG. 2

We are given that

$$\frac{dI_o/dT}{I_o}=0.11 \quad \text{and} \quad \frac{dI/dT}{T}=0.07$$

From the above two equations

$$\frac{dI_o}{dT}=0.11\ I_o=\frac{dI}{dT}=0.07\ I$$

$$\text{or } I_o=\frac{0.07}{0.11}I=0.636\ I$$

$I_R=I-I_o=(1-0.636)\ I=0.364\ I$, Finally

$$R=\frac{V}{I_R}=\frac{10\ V}{0.365\ \mu A}=\underline{5.49\ M\Omega}$$

2-12 From Fig. 3 $I=I_D+I_R=I_o(e^{V/V_T}-1)+\frac{V}{R}$

$$\text{or } I_o e^{V/V_T}+\frac{V}{R}=I+I_o$$

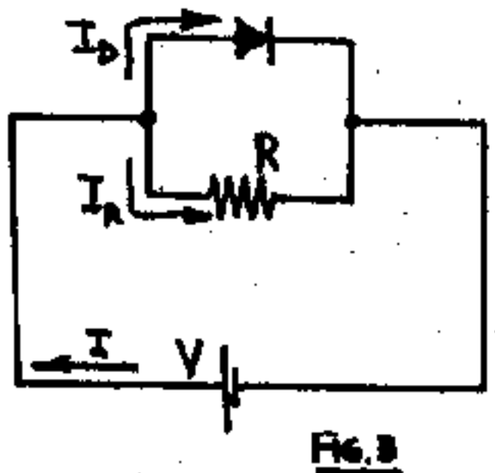

Fig. 3

Now, this equation is hard to solve by analytical methods. We therefore use the V-I characteristic of the diode, i.e.

$$I_D = I_o(e^{V/V_T}-1)$$

We plot sufficient pairs of values for I_D and V to obtain the diode characteristic of Fig. 4. The voltage V has to satisfy this relationship. We have to find one more equation that V has to satisfy. The intersection of these two curves should give us the desired value of V.

Notice that

$$I_R = \frac{V}{R} \quad \text{or} \quad I - I_D = \frac{V}{R}$$

This is another relationship between I_D and V, which happens to be linear. Two points on it are found as follows:

Let $I_D = 0$; then $V = R\,I = (1.25\,k\Omega)\times(40\,\mu A) = 0.05$ V (point A)

Let $V = 0$; then $I_D = I = 40\,\mu A$ (point B)

The intersection of the two curves gives the desired answer $\underline{V \approx 0.027\ V}$

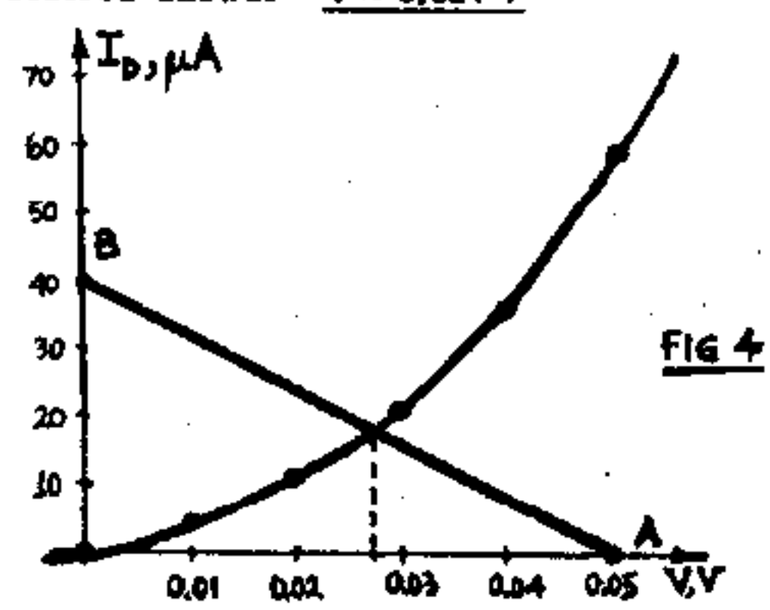

Fig 4

2-13 The thermal resistance R_t is 0.1 mW/°C.

Here we have $\Delta T = 10°C$ and

$$P_{out} = R_t \Delta T = (0.1\,mW/°C)(10°C) = 1\,mW$$

From Eq. (2-5) $I_o(35°C) = I_o(25°C)\times 2^{\Delta T/10} = 5\mu A \times 2 = 10\,\mu A$

For thermal equilibrium we want P_{out} to be equal to the rate of heat generated by the thermal losses due to the current. The latter power is

$$P_{electr.} = V \cdot I_o = P_{out} = 1\,mW$$

Therefore $V = \frac{P_{out}}{I_o} = \frac{1\,mW}{10\,\mu A} = 0.1\,kV = \underline{100V}$

2-14 From Eq. (2-3) $I(T) = I_o(T)[e^{V/\eta V_T}-1]$

$$= I_o(T)\left[\exp\left(\frac{V \times 11600}{2 \times T}\right)-1\right]$$

We want to find $I(-55°C)/I(25°C) = I(218K)/I(298K)$

$$I(-55) = I_o(-55)\left[\exp\left(\frac{0.7 \times 11600}{2 \times 218}\right)-1\right] = I_o(-55)\,1.225\times 10^8$$

Using Eq. (2-5)

$$I(25) = I_o(25)\left[\exp\left(\frac{0.7 \times 11600}{2 \times 298}\right)-1\right] = \left[2^{\Delta T/10} \cdot I_o(-55)\right]$$

$$\times [8.258\times 10^5] = 2^{(298-218)/10} \times I_o(-55) \times 8.258\times 10^5$$

$$= 2.114\times 10^8 \times I_o(-55)$$

Therefore $I(-55°C)/I(25°C) = \underline{0.579}$

2-15 From Eq. (2-5)

$$I_o(105°) = I_o(125°)2^{\Delta T/10} = 0.1\times 2^{(105-125)/10}\,\mu A = 25\,nA$$

$$V_T = T/11600 = (273+105)/11600 = 0.0326\ V$$

From Eqs. (2-7) and (2-3)

(a) $r = \frac{\eta T_T}{I_o \exp(V/\eta V_T)} = \frac{2 \times 0.0326}{25\exp(0.8/2\times 0.0326)} = 1.22\times 10^{-8}\,\frac{V}{nA}$

$= \underline{12.2\,\Omega}$

(b) $r = \frac{\eta V_T}{I_o \exp(V/\eta V_T)} = \frac{0.0652}{25\exp(-0.8/0.0652)} = 556\,\frac{V}{nA}$

$= \underline{5.56\times 10^{11}\,\Omega}$

2-16 Since the static resistance R is defined as V/I we have

$$V = R \cdot I = 4.57\times 43.8\,\Omega\,mA = 200.17\,mV \approx 0.2\,V$$

From $I = I_o(e^{V/\eta V_T}-1)$ we get (with $\eta = 1$, $V_T = 0.026V$, and $V = 0.2\,V$)

$$I_o = \frac{I}{\exp(V/\eta V_T)-1} = \frac{43.8\,mA}{2190.4} = 1.999\times 10^{-2}\,mA \approx 20\,\mu A$$

At $V = 0.1$ V we have from Eq. (2-7)

$$r = \frac{\eta V_T}{I_o e^{V/\eta V_T}} = \frac{0.026}{20\times 46.8} = 2.777\times 10^{-5}\,\frac{V}{\mu A} = \underline{27.77\,\Omega}$$

2-17 We have, from Eq. (2-15) $W=\left(\frac{2\epsilon V_j}{qN_A}\right)^{1/2}$

But since $\sigma_p \simeq qN_A\mu_p$ we obtain

$$W=\left(\frac{2\epsilon V_j\mu_p}{\sigma_p}\right)^{1/2}$$

2-18 (a) $C_T=\frac{\epsilon A}{W}$ and from Eq. (2-15) $W=\left(\frac{2\epsilon V_j}{qN_A}\right)^{1/2}$.

We have

$$\frac{C_T}{A}=\frac{\epsilon}{W}=\epsilon\left(\frac{qN_A}{2\epsilon V_j}\right)^{1/2}=\left(\frac{q\epsilon}{2}\right)^{1/2}\left(\frac{N_A}{V_j}\right)^{1/2}$$

Now, from Appendix A1

$$\left(\frac{q\epsilon}{2}\right)^{1/2}=(0.5\text{x}1.6\text{x}10^{-19}\text{x}12\text{x}8.849\text{x}10^{-12}\text{x}10^{-11})^{1/2}=$$

$$2.913\text{x}10^{-16}, \text{ hence}$$

$$C_T/A=2.913\text{x}10^{-16}(N_A/V_j)^{1/2}F/cm^2=$$

$$2.913\text{x}10^{-4}(N_A/V_j)^{1/2}pF/cm^2$$

(b) In this case $A=\pi R^2=\pi D^2/4$

$$=\pi\text{x}(50\text{x}10^{-3}\text{inx}2.54\text{cm/in})^2/4$$

or $A=1.267\text{x}10^{-2}cm^2$

We find N_A from $\rho=\frac{1}{N_A\mu_p q}$ or $N_A=\frac{1}{\rho\mu_p q}$

from which

$$N_A=(4\text{x}500\text{x}1.6\text{x}10^{-19})^{-1}=3.125\text{x}10^{15}/cm^3$$

$V_j=4+0.3=4.3V$. Hence

$$C_T=2.913\text{x}10^{-4}(3.125\text{x}10^{15}/4.3)^{1/2}\text{x}1.267\text{x}10^{-2}=\underline{99.49pF}$$

2-19 $A=\pi R^2=\frac{\pi D^2}{4}=\frac{\pi}{4}(40\text{x}10^{-3}\text{inx}2.54\text{cm/in})^2=8.107\text{x}10^{-3}cm^2$

Hence, using the result of Prob. 2-1 a

$$N_A=V_j\left(\frac{C_T}{A}\right)^2\left(\frac{1}{2.913\text{x}10^{-4}}\right)^2$$

$$=(5+0.35)\left(\frac{61}{8.107\text{x}10^{-3}\text{x}2.913\text{x}10^{-4}}\right)^2=3.57\text{x}10^{15}/cm^3$$

$$\therefore \rho_p=\frac{1}{\sigma_p}\approx\frac{1}{qp_p\mu_p}\approx\frac{1}{qN_A\mu_p}=\frac{1}{1.60\text{x}10^{-19}3.57\text{x}10^{15}\text{x}500}$$

$$=\underline{3.50\Omega\text{-cm}}$$

2-20 (a) We first derive an expression for $\epsilon(x)$

$$\epsilon(x)=\int_{x_0}^{x}\frac{\rho}{\epsilon}dx$$

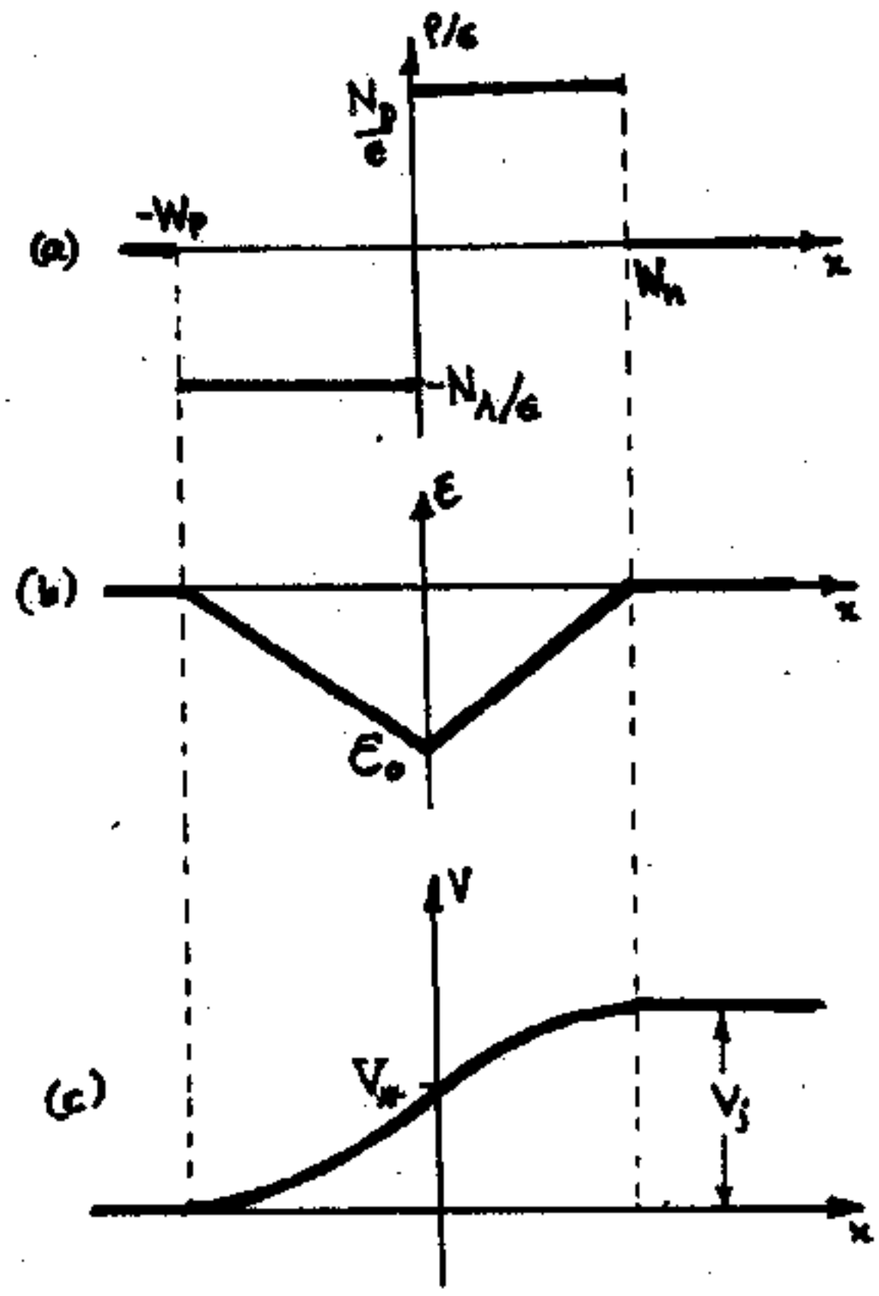

FIG. 5

From Fig. 5a

$$\frac{\rho(x)}{\epsilon}=\begin{cases}0 & \text{for } x<-W_p\\ -qN_A/\epsilon & \text{for } -W_p<x<0\\ qN_D/\epsilon & \text{for } 0<x<W_n\\ 0 & \text{for } x>W_n\end{cases}$$

with the condition

$$W_pN_A=W_n\cdot N_D \qquad (1)$$

Therefore

$\epsilon(x)$ has the following expressions for various ranges of x.

i) $x<-W_p$: $\epsilon=0$

ii) $-W_p<x<0$: $\epsilon=\int_{-W_p}^{x}\rho dx=\int_{-W_p}^{x}\frac{-qN_A}{\epsilon}dx$

$$=-\frac{qN_A}{\epsilon}(x+W_p)$$

iii) At $x=0$ $\epsilon=\epsilon_o=\frac{-qN_AW_p}{\epsilon}$ (1a)

iv) $0<x<W_n$: $\epsilon=\int_{-W_p}^{x}\frac{\rho}{\epsilon}dx=\int_{-W_p}^{0}\frac{\rho}{\epsilon}dx+\int_{0}^{x}\frac{\rho}{\epsilon}dx$

$$= \epsilon_o + \int_o^x \frac{qN_D}{\epsilon} dx = \epsilon_o + \frac{qN_D x}{\epsilon}$$

v) Notice that at $x = W_n$, $\epsilon = \epsilon_o + \frac{qN_D W_n}{\epsilon} =$

$$-\frac{qN_A W_p}{\epsilon} + \frac{qN_D W_n}{\epsilon} = 0$$

We next obtain formulas for $V(x)$ from

$$V(x) = -\int_{x_o}^{x} \epsilon(x)dx$$

we distinguish again various ranges of values for x.

i) $x < -W_p$: $V = 0$

ii) $-W_p < x < 0$: $V = -\int_{-W_p}^{x} \frac{-qN_A}{\epsilon}(x+W_p)dx$

$$= +\frac{qN_A}{2\epsilon}(x+W_p)^2 \Big|_{-W_p}^{x} = \frac{qN_A}{2\epsilon}(x+W_p)^2$$

Let V^* stand for $V(0)$, i.e. $V(0) = -\int_{-W_p}^{o} \epsilon dx$

$$= \frac{qN_A W_p^2}{2\epsilon} = V^*$$

iii) $0 < x < W_n$: $V(x) = V^* - \int_0^x \epsilon dx = V^* - \int_0^x [\epsilon_o + \frac{qN_D x}{\epsilon}]dx$ or

$$V(x) = V^* - \epsilon_o x - \frac{qN_D}{2\epsilon} x^2$$

iv) Beyond $x = W_n$, $V(x) = V(W_n)$, found from the last equation.

(b) $V_j = V(W_n)$, and using the last equation,

$$V_j = V^* - \epsilon_o W_n - \frac{qN_D}{2\epsilon} W_n^2 = \frac{qN_A W_p^2}{2\epsilon} + \frac{qN_A W_p W_n}{\epsilon} - \frac{qN_D W_n^2}{2\epsilon}$$

If we substitute $W_n = W_p N_A / N_D$ in the middle term above

$$V_j = \frac{qN_A W_p^2}{2\epsilon} + \frac{qN_A W_p W_n}{\epsilon} - \frac{qN_A W_n W_p}{2\epsilon} = \frac{qN_A W_p}{2\epsilon}(W_p + W_n)$$

Substituting for N_A the value from Eq. (1) we get $V_j = \frac{qN_D W_n}{2\epsilon} W$ where $W = W_n + W_p$. But we observe that

$$N_D W_n = N_A (W - W_n) \text{ or } W_n = \frac{N_A}{N_A + N_A} W, \text{ hence}$$

$$V_j = \frac{N_A}{N_A + N_D} \frac{qN_D}{2\epsilon} W^2 \qquad \text{Q.E.D.} \qquad (2)$$

(c) $C_T = \frac{dQ}{dV_j} = \frac{d}{dV_j}(qN_D W_n A) = qN_D A \frac{dW_n}{dV_j}$

$$= qN_D A \frac{N_A}{N_A + N_D} \frac{dW}{dV_j} \qquad (3)$$

From (2) $V_j^{1/2} = \left(\frac{N_A N_D}{N_A + N_D} \frac{q}{2\epsilon}\right)^{1/2} W$ from which

$$\frac{1}{2} V_j^{-1/2} = \left(\frac{N_A N_D}{N_A + N_D} \frac{q}{2\epsilon}\right)^{1/2} \frac{dW}{dV_j}$$

and replacing this expression for $\frac{dW}{dV_j}$ in (3) we get

$$C_T = \left(\frac{q\epsilon}{2} \frac{N_A N_D}{N_A + N_D}\right)^{1/2} V_j^{-1/2} \qquad \text{Q.E.D.}$$

(d) If we substitute in the last equation the expression for V_j from Eq. (2) we get

$$C_T = \frac{\epsilon A}{W} = \frac{\epsilon A}{W_n + W_p}$$

(a) Here $W_p \ll W_n \approx W$.

2-21 (a) Here $W_p << W_n \approx W$ from Table 1-1, $\epsilon_r = 12$ and from Appendix A1 $\epsilon_o = 8.849 \times 10^{-14}$ F/cm.

Hence $\epsilon = \epsilon_r \epsilon_o = 1.062 \times 10^{-12}$ F/cm

Since $V_j = \frac{qN_D W^2}{2\epsilon}$ from Eq. (2-15), then

$$W = \left(\frac{2\epsilon V_j}{qN_D}\right)^{1/2} = \left[\frac{2 \times 1.062 \times 10^{-12}(10+0.5)}{1.60 \times 10^{-19} \times 10^{15}}\right]^{1/2} =$$

$$3.733 \times 10^{-4} \text{cm} = 3.733 \times 10^{-4} \text{cm} \times (\tfrac{1}{2.54} \text{ in/cm})$$

$$= 1.47 \times 10^{-4} \text{in} = \underline{0.147 \text{ mil}}$$

(b) From Eq. (2-13) with $x = 0$, $\epsilon_o = -\frac{qN_D W}{\epsilon}$

$$\epsilon_o = \frac{1.60 \times 10^{-19} \times 10^{15} \times 3.733 \times 10^{-4}}{1.062 \times 10^{-12}} = \underline{-5.624 \times 10^4 \text{ V/cm}}$$

(c) From Eq. (2-17) $\frac{C_T}{A} = \frac{\epsilon}{W}$ From (a)

$$W = 3.733 \times 10^{-4} \text{cm} \quad \text{and} \quad \frac{C_T}{A} = \frac{1.062 \times 10^{-12}}{3.733 \times 10^{-4}}$$

$$= 2.845 \times 10^{-9} \frac{\text{F}}{\text{cm}^2} = 2.845 \times 10^{-9} \frac{\text{F}}{\text{cm}^2} \times \frac{\text{pF}}{10^{-12} \text{F}}$$

$$\times \left(2.54 \frac{\text{cm}}{\text{in}}\right)^2 \times \left(10^{-3} \frac{\text{in}}{\text{mil}}\right)^2 = \underline{0.0184 \text{ pF/mil}^2}$$

2-22 We know that $C_T = \frac{b}{V^{1/2}}$ for an abrupt junction with b a constant. Since $C_T = 10$pF at $V = 4$V, we have $10 = \frac{b}{4^{1/2}} = \frac{b}{2}$ or $b = 20(\text{pF V}^{1/2})$

Now, for $V = 4.5$V $C_T = \frac{20}{4.5^{1/2}} = 9.428$pF

This is a 0.572 pF decrease in capacitance.

2-23 $\epsilon = \epsilon_r \epsilon_o = 16 \times 8.849 \times 10^{-12} F/m = 1.416 \times 10^{-10} F/m$

(see App. A1)

$$C_T = \frac{\epsilon A}{W} = \frac{1.416 \times 10^{-10} \times (0.5 \times 10^{-3})^2}{3 \times 10^{-6}} F = \underline{11.8\ pF}$$

2-24 From Eq. (2-15) we have $V_j = V_o - V_d = 0.6 - V_d$

$$= \frac{qN_A}{2\epsilon} W^2$$

$$\therefore\ W = \left(\frac{2\epsilon}{qN_A}\right)^{1/2} (0.6 - V_d)^{1/2} = \left[\frac{2 \times 12 \times 8.849 \times 10^{-14}}{1.6 \times 10^{-19} \times 5 \times 10^{16}}\right]^{1/2} (0.6 - V_d)^{1/2}$$

where we have used $\epsilon = \epsilon_r \epsilon_o$; ϵ_r and ϵ_o are taken from Table 1-1 and Appendix A1, respectively.

$W = 1.629 \times 10^{-5} (0.6 - V_d)^{1/2}$. Therefore

(a) $W = 1.629 \times 10^{-5} (0.6 + 5.6)^{1/2} = \underline{4.056 \times 10^{-5}\ cm}$

(b) $W = 1.629 \times 10^{-5} (0.6 + 0.2)^{1/2} = \underline{1.457 \times 10^{-5}\ cm}$

(c) $W = 1.629 \times 10^{-5} (0.6 - 0.5)^{1/2} = \underline{1.629 \times 10^{-7}\ cm}$

(d) $C_T = \frac{\epsilon A}{W}$. For (a) $C_T = \frac{12 \times 8.849 \times 10^{-14} \times 10^{-2}}{4.056 \times 10^{-5}}$

$$= \underline{2.618 \times 10^{-10} F}$$

For (b) $C_T = \frac{12 \times 8.849 \times 10^{-14} 10^{-2}}{1.629 \times 10^{-7}}$

$$= \underline{7.288 \times 10^{-10} F}$$

2-25 (a) From Poisson's equation

$$\frac{d^2V}{dx^2} = -\frac{\rho}{\epsilon} = -\frac{ax}{\epsilon};\ \frac{dV}{dx} = -\frac{ax^2}{2\epsilon} + C_1$$

At $x = -W/2$ we have $\epsilon = -\frac{dV}{dx} = 0$ and $C_1 = \frac{aW^2}{8\epsilon}$

$$\frac{dV}{dx} = -\frac{ax^2}{2\epsilon} + \frac{aW^2}{8\epsilon};\ V = -\frac{ax^3}{6\epsilon} + \frac{aW^2 x}{8\epsilon} + C_2$$

At $x = -W/2$ we have $V = 0$ or $C_2 = -\frac{aW^3}{48\epsilon} + \frac{aW^3}{16\epsilon} = \frac{aW^3}{24\epsilon}$

Finally at $x = W/2$ $V = V_j = -\frac{aW^3}{48\epsilon} + \frac{aW^3}{16\epsilon} + \frac{aW^3}{24\epsilon} = \frac{aW^3}{12\epsilon}$

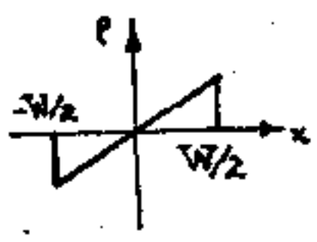

Fig. 6

(b) $Q = \int_0^{W/2} A\rho dx = \int_0^{W/2} Aax dx = \frac{AaW^2}{8}$

and $C_T = \frac{dQ}{dV} = \frac{AaW}{4} \frac{dW}{dV}$ From part (a) $\frac{dV}{dW} = \frac{dW^2}{4\epsilon}$

Hence $C_T = \frac{AaW}{4} \frac{4\epsilon}{aW^2} = \frac{\epsilon A}{W}$

2-26 Since $C_D = \frac{\tau_p I}{\eta V_T}$ from Eq. (2-27) and $L_p = (D_p \tau_p)^{1/2}$ (from Eq. (2-19))

we have $I = \frac{C_D \eta V_T}{\tau_p} = \frac{C_D \eta V_T D_p}{L_p^2} = \frac{1 \times 10^{-9} 2 \times 0.026 \times 13}{(2.6 \times 10^{-4})^2}$

$$= 0.01A = \underline{10mA}$$

2-27 The excess minority charge Q_p and Q_n in the p-side and in the n-side, respectively, are given by Eq. (2-24)

$$Q_p = AqL_p p'_n(0)$$

$$Q_n = AqL_n n'_p(0)$$

From Eq. (2-23) $I_{pn}(0) = \frac{AqD_p p_n(0)}{L_p} = \frac{Q_p}{\tau_p}$

$$I_{np}(0) = \frac{AqD_n n'_p(0)}{L_n} = \frac{Q_n}{\tau_n}$$

where we used $L_p^2 = D_p \tau_p$ and $L_n^2 = D_n \tau_n$

The total diffusion charge is $Q = Q_p + Q_n = \tau_p I_{pn}(0) + \tau_n I_{np}(0)$

$$C = \frac{dQ}{dV} = \tau_p \frac{dI_{pn}(0)}{dV} + \tau_n \frac{dI_{np}(0)}{dV} = \tau_p g_p + \tau_n g_n$$

where $g_p (g_n)$ is the conductance due to holes (electrons)

2-28 (a) From Eq. (2-13) with $x = 0$

$$\epsilon_m = |\epsilon_{max}| = \frac{qN_D}{\epsilon} W$$

From Eq. (2-15) $V_j = \frac{qN_D}{2\epsilon} W^2$; dividing those two equations

$\epsilon_m / V_j = 2/W$, hence $\epsilon_m = 2V_j/W$

(b) From the first eq., $W = \frac{\epsilon \epsilon_m}{qN_D}$; substituting this in the second eq.

$$V_j = \frac{qN_D}{2\epsilon} \frac{\epsilon^2 \epsilon_m^2}{q^2 N_D^2} = \frac{\epsilon \epsilon_Z^2}{2qN_D} \approx V_Z$$

2-29 (a) Proceeding as in Prob. 2-28b we find (with N_A replaced by N_D)

$V_Z = \frac{\epsilon \epsilon_Z^2}{2qN_A}$ (1) From Eq. (1-15) $\sigma = N_A q \mu_p$

and substituting into Eq. (1) yields

$$V_Z = \frac{\epsilon \epsilon_Z \mu_p}{2\sigma_p} = \frac{16 \times 8.849 \times 10^{-14} \times (2 \times 10^5)^2 \times 1800}{2\sigma_p} = \frac{50.93}{\sigma_p}$$

where we have used the constants in Table 1-1 and Appendix A1.

(b) For intrinsic germanium from Table 1-1 $\sigma_p = 1/45$,

hence $V_Z = \underline{2292\ V}$

(c) Here $\sigma_p = \frac{1}{3.7}\ (\Omega\text{-cm})^{-1}$, hence $V_Z = \underline{188.4\ V}$

(d) $\rho_p = \frac{1}{\sigma_p} = \frac{V_Z}{50.93} = \frac{10}{50.93} = \underline{0.196\ \Omega\text{-cm}}$

2-30 (a) Assume that the diode is ON with V=0.7V (since $V_\gamma = 0.6$ V)

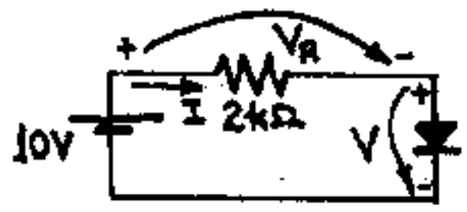

FIG. 7

Then $I = V_R/R = (10-V)/R$ or $I = 9.3/2 = \underline{4.65\ mA}$

(b) We will now obtain a better approximation V_2 for the voltage across the diode.

From $I_2 = I_o \exp(V_2/\eta V_T)$ and $I_1 = I_o \exp(V_1/\eta V_T)$

$V_2 - V_1 = \eta V_T \ln(I_2/I_1)$ with $V_1 = 0.6$, $I_1 = 1mA$ and I_2 = the approximate answer of part (a).

$V_2 - 0.6 = 0.052 \times \ln(4.65) = .0799$ or $V_2 = 0.680$ V

Hence a more accurate value for the current is

$I = (10-0.680)/R = \underline{4.66\ mA}$

(c) $I = (10-V_Z)/R = (10-7)/2 = \underline{1.5\ mA}$

(d) One diode is in the breakdown region and the voltage across it is $V_Z = 7$ V. The other diode is forward biased and the voltage across it is about 0.7 V. Hence

$I = (10-7-0.7)/2 = \underline{1.15\ mA}$

(e) Neither diode is in the breakdown region. Hence, one is forward biased and the other is reverse biased; the current is limited by the reverse biased diode. Hence $I = I_o$. Since (0.6 V, 1mA) is on the VI curve, we have $I = I_o(\exp(0.6/2 \times 0.026)-1)$ from which $I = I_o = \underline{9.71 \times 10^{-6}\ mA}$

2-31 (a) The battery voltage is not sufficient to cause breakdown in any of the diodes. Hence, one of the diodes is reverse biased and I_o flows through it. For the forward biased diode

$I = I_o(e^{V/\eta V_T} - 1) = I_o = \underline{10nA}$

$e^{V/\eta V_T} = 2$ or $V = \eta V_T \ln 2 = 0.052 \times 0.693 = \underline{0.036V}$

The voltage across the other diode is 6-0.036V $= \underline{5.964\ V}$

(b) Now the reverse biased diode has a Zener breakdown with a voltage $V_Z = \underline{5V}$ across it, and the other has a voltage of $6-5 = \underline{1V}$.

The current in the circuit is

$I = I_o(e^{V/\eta V_T} - 1) = 10 \times [\exp(1/2 \times 0.026) - 1] =$

$10 \times 2.25 \times 10^8\ nA = \underline{2.25A}$

2-32 For zero-temperature coefficient, the avalanche diode must have a coefficient of $+1.7mV/^oC$, or expressed otherwise,

$$\text{Temp. coef.} = \frac{1.7 \times 10^{-3}\ V/^oC}{15V} \times 100\% = 0.0113\%/^oC$$

2-33 $I_{o1} = 1\mu A$, $I_{o2} = 2\mu A$

$V_{Z1} = V_{Z2} = V_Z = 100V$

For each diode we have

$I_D = I_o[\exp(V_D/\eta V_T) - 1]$ or $V_D = \eta V_T \ln(1 + \frac{I_D}{I_o})$ (1)

Assume $\eta = 2$

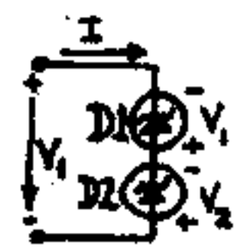

FIG 8

(a) $\underline{V=80V}$: Here none of the diodes breaks down and I is limited by the smallest I_o, i.e. $\underline{I = I_{o1} = 1\mu A}$ Now, for D2 $I_D = -I = -1\mu A$, and from (1)

$V_2 = 0.052 \times \ln(1 - I/2) = \underline{-36.044mV}$, and

$V_1 = -80 + V_2 \approx \underline{-79.964\ V}$

$\underline{V=120\ V}$: Here D1 will break down, and D2 will be reverse biased. Hence $I = I_{o2} = \underline{2\mu A}$, $V_1 = \underline{-100V}$, $V_2 = \underline{-20V}$

(b) $\underline{V=80V}$: Here $R = 8M\Omega$, and these resistors tend to equalize the voltage across the diodes so that $\underline{I_1 = 1\mu A}$ and $\underline{I_2 = 2\mu A}$.

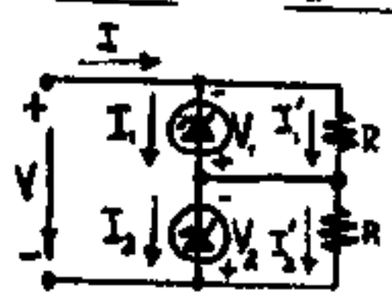

FIG. 9

Now $I = I_1 + I_1' = I_2 + I_2'$ or

$$I_1' = I_2 - I_1 + I_2' = (1 + I_2')\,\mu A \qquad (2)$$

Also, $I_1' = -\frac{V_1}{R}$, $I_2' = -\frac{V_2}{R} = \frac{V+V_1}{R}\,\mu A$ (3)

Substituting (3) into (2) we get $-\frac{V_1}{R} = (1 + \frac{V+V_1}{R})$ or

$V_1 = -\frac{R+V}{2}$

This is valid for $V_1 < V_Z = 100$

For $V=80V$, $V_1 = -(8+80)/2 = -44V$, $V_2 = \underline{-36V}$.

For $V=120V$, $V_1 = -(8+120)/2 = -64V$, and $V_2 = \underline{-56V}$.

2-34 a) It is clear that the current is in the reverse direction through the diode. Hence $I = I_o = 30nA$ and $V_R = R \cdot I = 10M\Omega \times 30nA = 300\times10^{-3}V = \underline{0.3V}$

Finally, the voltage across the diode is

$V_D = 1 - 0.3 = \underline{0.7V}$

b) Here the current I is in the forward direction and we have:

$$I = I_o(e^{V/\eta V_T} - 1) \qquad (1)$$

$$V_D + RI = 1V \qquad (2)$$

Eqs. (1) and (2) contain I and V_D as the only unknowns. We shall solve them graphically by plotting both on the same coordinate system as in Fig. 2-14 and obtaining the value of V_D from their intersection. Corresponding values of V and I in (1) are listed below:

V, mV	I, nA
0	0
20	14.07
40	34.74
60	65.11
80	109.72

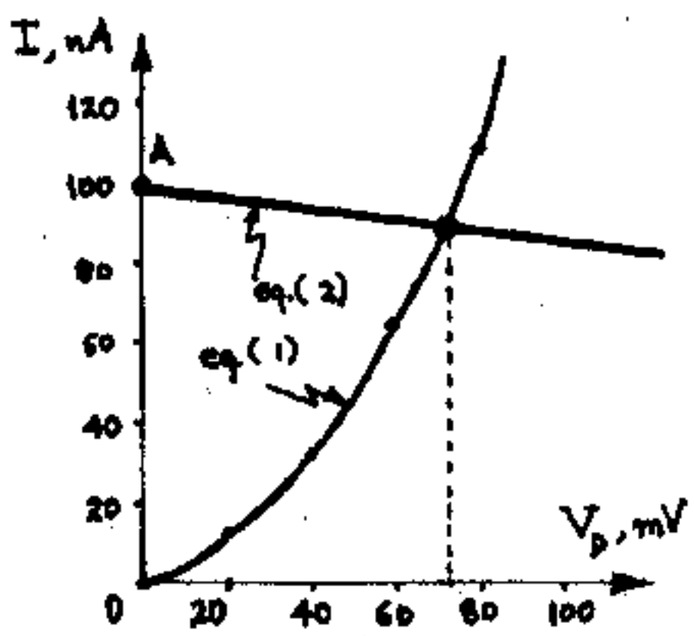

FIG. 10

Eq. (2) is a linear relationship called the loadline. The slope is $-1/R = -1/10M\Omega = -1nA/10mV$ and a point on the curve is obtained by setting $V_D = 0$ in (2) thus obtaining $I = 1V/R = 1V/10M\Omega = 0.1\mu A = 100nA$ (point A). Finally, $\underline{V_D \approx 73mV}$

2-35 (a) One of the diodes has a Zener breakdown and a voltage $V_Z = 4V$. Hence the voltage across the forward-biased diode is $6-4 = 2V$ and

$I = I_o(\exp(V/\eta V_T) - 1) = 10[\exp(2/2\times0.026) - 1]nA = \underline{5.054\times10^{8}A}$;

(b) Load-line method

We plot the relation $I = I_o[\exp(V/\eta V_T) - 1]$ for various values of V. Since the forward biased diode "sees" a battery of $E = 6 - V_Z = 2V$ and a 200-Ω resistor, the load line passes through the points (0, 2V) and (E/R, 0) = (2/0.2, 0) = (10mA, 0). The intersection gives a diode current $I \approx 6.5mA$ and a voltage $V = 0.7V$

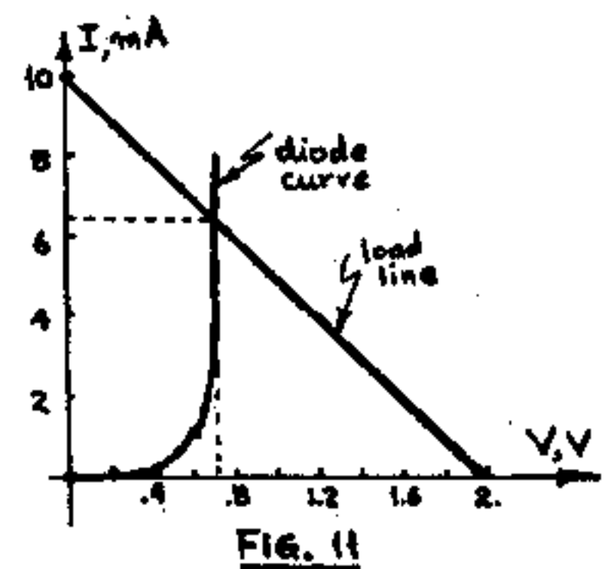

FIG. 11

Iterative approximation As a first guess, take the diode voltage to be zero. Then $I_1 = (2-0)/0.2 = 10mA$ Now, the diode voltage corresponding to I_1 is found by solving $I_1 = I_o(\exp(V_1/\eta V_T) - 1)$ for V_1,

$$V_1 = \eta V_T \ln\left(\frac{I_1}{I_o} + 1\right) \qquad (1)$$

or $V_1 = 2\times0.026 \ln\left(\frac{10\times10^6 nA}{10nA} + 1\right) = 0.718V$

Now, a better approximation to the current is

$I_2 = (2 - V_1)/R = (2 - 0.718)/0.2 = 6.408mA$

Again, from Eq. (1) we obtain the diode voltage corresponding to I_2 to be $V_2 = 0.695V$

The next current approximation is $I_3 = (2 - 0.695)/0.2 = 6.523mA$ and the corresponding diode voltage is $V_3 = 0.696V$ and finally $I_4 = (2 - 0.696)/0.2 = \underline{6.519mA}$ which is very close to I_3.

Hence $I \approx 6.52mA$

2-36 (a) The load-line method can be employed here just as in the previous problem. We use iterative approximations for more accuracy: In what follows, the voltage V across the diode will be computed from the known current I through it by employing $I=I_o[\exp(V/V_T)-1]$ or $V=V_T \ln\left(\frac{I}{I_o}+1\right)$ (1)

Neglecting the diode voltage for the first approximation,

$I_1=(30-0)/1=30\text{mA}$; For this current we obtain from (1) $V_1=0.026\times\ln((30\times10^{-3}/10\times10^{-6})+1)=0.208\text{V}$
For a better approximation, $I_2=(30-0.208)/1=29.79\text{mA}$ and from (1) $V_2=0.208\text{V}$ and

$I=I_3\approx I_2=\underline{29.79\text{ mA}}$

(b) Assuming that the diode's resistance (when reverseObiased) is much greater than $1\text{k}\Omega$, we can neglect the voltage across the $1\text{k}\Omega$ resistor. Hence the diode's voltage is approximately -30V and $\underline{I=I_o=-10\mu\text{A}}$. As a check, note that the drop across the $1\text{k}\Omega$ is $10\mu\text{V}$ which is indeed negligible.

(c) <u>Forward biased diode:</u> The analysis here is identical to that in part (a) and $\underline{I=29.79\text{mA}}$

<u>Reverse biased diode:</u> $I=(-30+V_Z)/R=$

$-20/1=\underline{20\text{ mA}}$.

2-37 (a) The V-I characteristic is plotted for a number of (I, V) pairs.

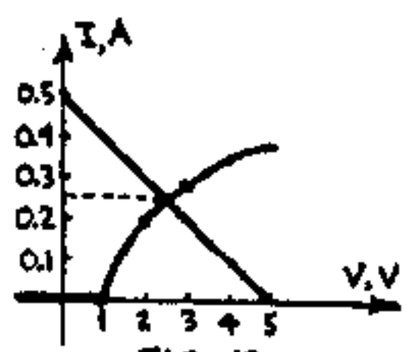

FIG. 12

The load line is defined by $5=V+10I$ (1)
Thus two points on it are obtained by setting $V=0$ for which $I=5/10=0.5$ and $I=0$ for which $V=5$.

The intersection gives $I=\underline{0.25\text{A}}$ as the answer

(b) The solution is obtained by combining Eq. (1) above with $I=0.2\sqrt{V-1}$ from which $I^2=0.04(V-1)$ or $V=25I^2+1$. Substituting in (1) we get

$5=25I^2+1+10I$ or $\underline{I=0.247\text{A}}$

2-38 (a) $R=10\text{k}\Omega$

Assume that both diodes are on. Writing KVL equations for the two loops (defined by the 100-V battery and R with D1 and D2 replaced by their piecewise linear model) we get

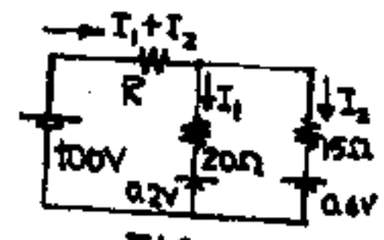

FIG. 13

$$100=R(I_1+I_2)+0.02I_1+0.2$$
$$100=R(I_1+I_2)+0.015I_2+0.6 \quad (1)$$

or $10.02I_1+10I_2=99.8$
$10.I_1+10.015I_2=99.4$

Using Crammer's rule we get

$$I_2=\frac{10.02\times99.4-10\times99.8}{10.02\times10.015-10\times10}=-5.743,$$

but since $I_2<0$ D2 is OFF, contrary to our assumption.

Hence assume that D1 is ON, D2 is OFF, and $\underline{I_2\approx0}$. Now $100\text{V}=RI_1+0.02I_1+0.2$ or $I_1=\underline{9.96\text{mA}}$. As an additional check that D2 is OFF note that the voltage across D2 is $100-10I_1=100-99.6=0.4\text{V}<V_{\gamma2}=0.6$

(b) $R=1\text{k}\Omega$. Again, if we assume that both diodes are ON, we get from (1):

$$\left.\begin{aligned}1.02I_1+I_2&=99.8\\ I_1+1.015I_2&=99.4\end{aligned}\right\}$$

Now, using Crammer's rule $I_2=\frac{1.02\times99.4-99.8}{1.02\times1.015-1}=\underline{44.99\text{mA}}$ and $I_1=\underline{53.74\text{mA}}$

Both currents are positive and the original assumption was correct.

2-39 Assume an infinite resistance for a diode which is reverse biased. Also let $V'=0.7\text{V}$

(a) $v_1=10\text{V}$, $v_2=0\text{V}$: Here we assume that D1 is ON, D2 is OFF. Then, the current through D1 and the $9\text{k}\Omega$ resistor is

$$I=\frac{v_1-V'}{(9+1)}=\frac{10-0.7}{10}=0.93\text{mA} \quad \text{and}$$

$$v_o=9\times0.93=\underline{8.37\text{V}}$$

D2 is OFF because it is reverse biased by $v_0-v_2=-8.37\text{V}$

(b) $v_1=5\text{V}$, $v_2=0\text{V}$: Under the same assumptions,

$$I=\frac{v_1-V'}{9+1}=0.43\text{mA} \quad \text{and} \quad v_0=9\times0.43=\underline{3.87\text{V}}$$

D2 is OFF because it is reverse biased by $-3.87V$

(c) $v_1=10\text{V}$, $v_2=5\text{V}$: Now, assume that D1 is ON, D2 is OFF. Again, as in (a), $I=0.93\text{mA}$ and $v_0=\underline{8.37\text{V}}$

Now, the voltage across D2 (assuming no current

through it) is $v_2 - v_0 = 5-8.37 = -3.37V$ which verifies the assumption that D2 is OFF.

(d) $v_1 = v_2 = 5V$: Assume that both diodes are ON. Then a current I_D flows through each diode and their sum $2I_D$ flows through the 9kΩ resistor.

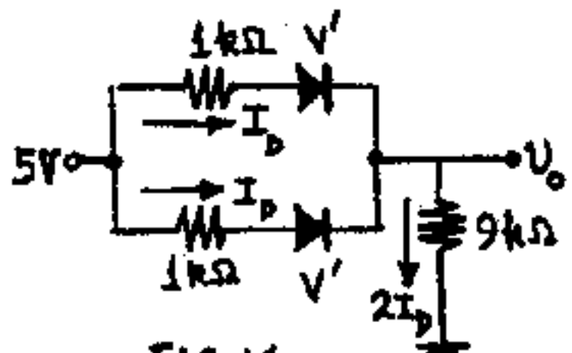

FIG. 14

Now, applying KVL we get

$-v_1 + 1xI_D + V' + 9x2I_D = 0$ or $I_D = \frac{v_1 - V'}{1+18} = \frac{5-0.7}{19} = 0.226mA$

and $v_0 = 9x2I_D = \underline{4.074\ V}$

2-40 (a) Here both diodes are OFF and the current I through the 10-kΩ resistor is zero. Hence

$v_0 = 5 - 10xI = \underline{5V}$

The voltage across each diode is 5-5=0V and hence each diode is OFF indeed.

(b) Now D2 is ON, D1 is OFF and the current through D2 is

$I_{D2} = \frac{5V-0V}{1+10} = 0.4545mA$. Hence

$v_0 = V_\gamma + 1xI_{D2} = 0 + 0.4545V = \underline{0.4545V}$

Alternatively, $v_D = 5 - 10I_{D2} = 5 - 4.545 = 0.455V$

The voltage across D1 is $v_0 - v_1 = 0.455 - 5 = -4.545V$ and hence D1 is indeed OFF.

(c) Now both diodes conduct and the currents $I_{D1} = I_{D2} = I_D$ while the current in the 10kΩ resistor is $I = I_{D1} + I_{D2} = 2I_D$. From the circuit

$-5 + 10x2I_D + V_\gamma + 1xI_D + v_2 = 0$ or $I_D = \frac{5}{21} = 0.2381mA$

Finally, $v_0 = V_\gamma + 1xI_D = \underline{0.2381V}$

Alternatively, $v_0 = 5 - 10(2I_o) = 5 - (20)(0.2381) = \underline{0.238mA}$

2-41 Assume $V_{cond} = V' = 0.7V$

$R = 20k\Omega$, $R_1 = R_2 = 1k\Omega$

(a) $v_1 = 0$ and $v_2 = 25V$

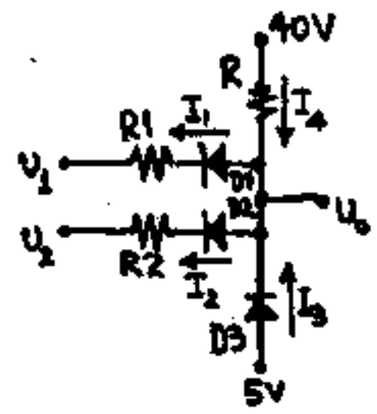

FIG 15

D2 is OFF, D1 and D3 are ON

Hence $I_1 = \frac{5-0.7-0.7-v_1}{R_1} = \frac{3.6}{1} = \underline{3.6mA}$

$v_0 = 5 - 0.7 = \underline{4.3V}$

$I_2 = \underline{0A}$

$I_3 = I_1 - I_4 = 3.6 - \frac{40-v_0}{R} = 3.6 - \frac{40-4.3}{20} = \underline{1.815mA}$

D2 is OFF because it is reverse biased by

$v_0 - v_2 = 4.3 - 25 = -20.7V$

(b) $v_1 = v_2 = 25V$

Now assume that D1 and D2 are ON and D3 is OFF and $I_1 = I_2 = I$, $I_4 = 2I$. Applying KVL we get:

$-40 + RI_4 + V' + R_1I_1 + v_1 = 0$ or

$R2I + R_1I = 40 - v_1 - V' = 40 - 25 - 0.7 = 14.3$ and

$I = 14.3/(2R + R_1) = 14.3/41 = 0.349mA$

Hence $I_1 = I_2 = I = \underline{0.349mA}$, $I_3 = \underline{0}$

and $v_0 = 40 - Rx2I = 40 - 20x0.698 = \underline{26.04V}$

D3 is OFF because it is reverse biased by

$5 - v_0 = -21.04V$.

CHAPTER 3

3-1 (a) The load-line equation is

$$-V_{CC} = V_{CB} + R_L I_C \quad \text{or} \quad V_{CB} = -1.2 + 40\, I_C .$$

Two points on the curve are (V_{CB}=-1.2 V, I_C= 0), and (OV, -1.2 V/40 Ω = 30 mA). The intersection of the load line with the I_E= 5 mA line on the CB output characteristics of Fig. 3-6 gives the quiescent point with I_C=-5 mA, V_{CB}= -1 V

(b) If we use the quiescent values for I_E and V_{CB} of part (a)(5 mA and -1 V, respectively) on the CB input characteristics of Fig. 3-7, we obtain V_{EB}= 0.67 V,

$V_L = -R_L I_C$=-40 Ω (-5 mA)= 200 mA= 0.2 V

(c) For $I_{E1} = I_E + \Delta I_E/2 = 5 + 10/2 = 10$ mA, we obtain from the same load line of part (a) I_C=-10 mA; for $I_{E2} = I_E - \Delta I_E/2 = 0$ mA, $I_C = I_{CO} \approx$ 0 mA.

3-2 (a) From the load-line equation

$$V_{CC} = -V_{CB} - R_L I_C = 3 - 0.1 \times (-15) = 4.5 \text{ V}$$

Observe from the output characteristics of Fig. 3-6 that $I_E \approx -I_C$ for negative values of V_{CB}. Hence $I_E \approx$ 15 mA

(b) Now V_{CC}= 4.5-1 = 3.5V and I_E= 15 mA. Now $I_C \approx -I_E$=-15 mA, and from the equation of the load line $V_{CB} = -V_{CC} - R_L I_C$=-3.5-0.1 x(-15)=-2 V.

3-3 Assume that the transistor is in the active region. Neglecting I_{CO}, $I_C = -\alpha I_E$= 0.98x2=1.96 mA and $I_B = -(I_C + I_E)$ = 0.04 mA. Thus $V_{BN} = V_{BE} - R_e I_E$ = 0.7+0.2 x 2 = 1.1 V and

$$I_{R_2} = \frac{V_{BN}}{R_2} = \frac{1.1}{25} = 0.044 \text{ mA. Hence}$$

$I_{R_1} = I_B + I_{R_2}$ = 0.084 mA. We next apply KVL to find $V_{CN} = V_{CC} - (I_C + I_{R_1})2\text{ k}\Omega$ = 12-(1.96+0.084)2 = 7.91 V and $V_{R_1} = V_{CN} - V_{BN}$ = 7.91-1.1= 6.81 V. Finally, $R_1 = V_{R_1}/I_{R_1}$ = 6.81/0.084 ≈ 81.1 kΩ

3-4

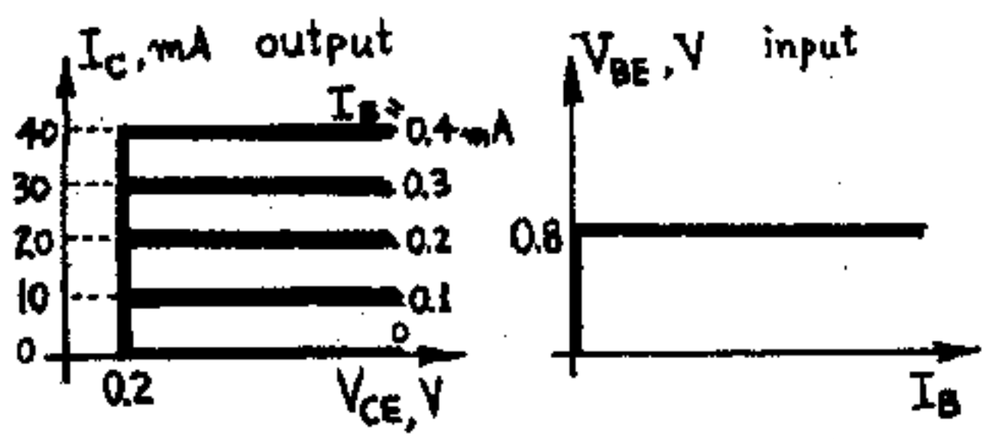

Notice that, in the output characteristics, the curves for which I_B= constant are horizontal and that $I_C = h_{FE} I_B$= 100 I_B

3-5 (a) Assume that both transistors are in the active region. Then the governing equations are

$$I_C = -\alpha I_E \quad \text{and} \quad I_C = \beta I_B, \quad \beta = \frac{\alpha}{1-\alpha}$$

with α_1= 0.99, α_2= 0.98, β_1= 0.99/0.01=99, β_2= 0.98/0.02=49

Hence, $I_{C2} = -\alpha_2 I_E$= +0.98x120 = 117.6 mA

$I_{B2} = -(I_E + I_{C2})$ = -(-120+117.6) = 2.4 mA

$I_{E1} = -I_{B2}$= -2.4 mA; $I_{C1} = -\alpha_1 I_{E1}$= +0.99x2.4=2.376 mA

$I_{B1} = I_B = -(I_{E1} + I_{C1})$=-(-2.4+2.376) = 0.024 mA

Finally, $I_C = I_{C1} + I_{C2}$= 2.376+117.6 = 119.98 mA

(b) $V_{CE} = V_{CC} - R_c I_C$= 20 - 0.1 x 120 = 8 V

(c) I_C/I_B= 119.98/0.024 = 4999

I_C/I_E = 119.98/(-120) ≈ 0.9998

3-6 (a) Using the load line equation we have

$V_{CC} = R_c I_C + V_{CE}$, hence $I_C = (V_{CC} - V_{CE})/R_c = (12-6)/0.24$ = 25 mA. The quiescent point is V_{CE} = 6V and I_C= 25 mA, and from Fig. 3-9 we obtain $I_B \approx 120\,\mu$A= 0.12mA. Hence, from Fig. 3-10 we see that $V_{BE} \approx$ 0.7V. Hence $V_{BB} = R_b I_B + V_{BE}$ = 30 x 0.12 + 0.7 = 4.3 V

(b) The quiescent point is located at V_{CE}=2 V, I_C= 16 mA. Another point on the load line is V_{CE}=6 V, I_C= 0. Hence $R_c = -\Delta V_{CE}/\Delta I_C$= -(6-2)/(0-16)=250 Ω.

At I_C=16 mA and V_{CE}=2V, we find from Fig. 3-9 that I_B=80 μA = 0.08 mA at the quiescent point and from Fig. 3-10 we find $V_{BE} \approx$ 0.68 V at I_B=0.08 mA and V_{CE}= 2 V.

Hence $V_{BB} = R_b I_B + V_{BE}$= (30)(0.08)+ 0.68 = 3.08 V

3-7 (a) Draw a load line on Fig. 3-9. Two points on it are (V_{CC}, 0)=(8 V, 0 mA) and (0, V_{CC}/R_L)= (0, 8/0.2 = 40 mA). At the quiescent point I_C= 20 mA and from the load line we find V_{CE}= 4 V and I_B=100 μA = 0.1 mA and V_{BE}= 0.7 V.

$V_{BB} = V_{BE} + I_B R_b$ = 0.7 + 0.1 x 10 = 1.7 V ($R_L = R_c$ here)

(b) The slope of the input curve of Fig. 3-10 at this point is obtained graphically to be

$$r_b = \Delta V_{BE}/\Delta I_B \approx (0.9-0.65)/0.60 = 4.17\text{ k}\Omega$$

(c) Since $V_{CE} = V_{CC} - R_L I_C$, $\Delta V_{CE} = -R_L \Delta I_C$

Also, since $V_{BB} = R_b I_B + V_{BE}$, $\Delta V_{BB} = R_b \Delta I_B + \Delta V_{BE} = R_b \Delta I_B + r_b \Delta I_B = (R_b + r_b)\Delta I_B$. Hence

$$A = \frac{\Delta V_{CE}}{\Delta V_{BB}} = -\frac{R_L}{R_b + r_b}\frac{\Delta I_C}{\Delta I_B} \qquad (1)$$

$\Delta I_C/\Delta I_B$ is found from the load line in the common emitter output characteristics. Assuming that I_B varies from 80 to 120 μA around the quiescent point (I_C=20mA, V_{CE}= 4 V), we see that I_C varies from 16.5 to 25 mA approximately.

Hence, $\frac{\Delta I_C}{\Delta I_B} = \frac{25-16.5\,mA}{(120-80)\times10^3\,mA} = 212.5$

Now, from (1) we have

$A = -\frac{0.2}{10+4.17}\,212.5 = \underline{-3.00}$

3-8 The governing equations for the input and output circuit are Eq's (1) and (2), respectively:

$$V_i = R_b I_B + V_{BE} \qquad (1)$$

$$V_{CC} = R_c I_C + V_{CE} \qquad (2)$$

We first draw the load line for the input characteristics. Eq. (1) respresents a straight line in the (I_B, V_{BE}) plane. By letting V_{BE}= 0 we obtain $I_B = V_i/R_b$; similarly, I_B= 0 gives $V_{BE} = V_i$. Hence, two points on the line are ($I_B = V_i/R_b$, V_{BE}=0) and (0, V_i). Observe that the slope is always $-1/R_b$. Hence, as V_i increases, the load line will move parallel to itself as shown in the figure below for some typical values of V_i. Here we assume that curves for which V_{CE}>2 V are very close to that with V_{CE}= 2 V.

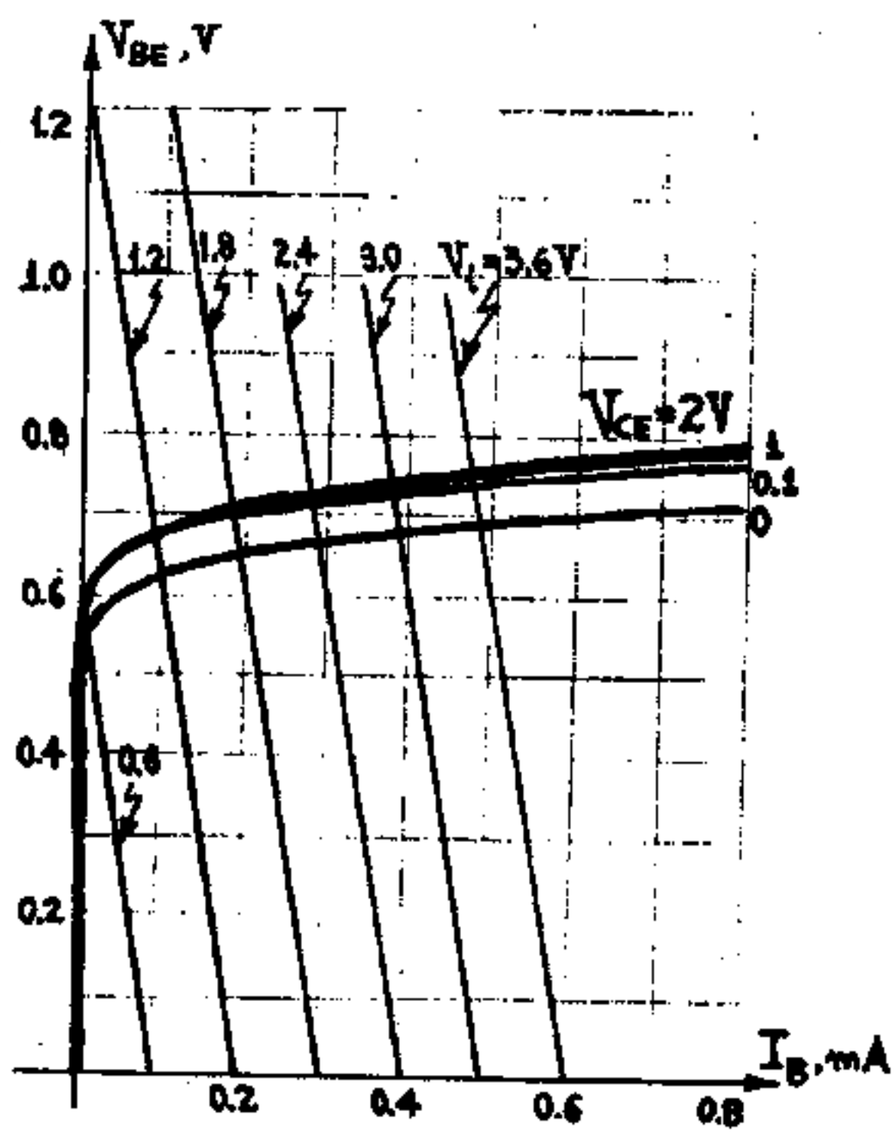

Similarly, two points on the output load line are: ($I_C = V_{CC}/R_c$ = 8/0.2 = 40 mA, V_{CE}= 0) and (I_C= 0, V_{CE}= V_{CC}= 8 V).

We superimpose this line on the output characteristics (o. c.)

From the input characteristics (i. c.) we see that:

(i) When $V_i \le 0.6$ V, then the load line meets the characteristics at a point for which $\underline{I_B \approx 0}$.

Hence, from the o. c. $\underline{I_C \approx 0}$ and

$V_o = V_{CE} = V_{CC} = \underline{8\ V}$.

(ii) For $0.6 \le V_i \le 1.8$ V, we see from the i. c. load line that ● I_B varies drastically from 0 to about 180 μA. From the shape of the input curve with V_{CE}=2V we see that I_B increases from 0 to about 90μA for $0.6 \le V_i \le 1.2$ and from 90μA to about 180 μA for $1.2 \le V_i \le 1.8$, which indicates that I_B varies linearly with V_i and the slope is (90-0)μA/(1.2-0.6)V= 150μA/V. The same slope is obtained from (180-90)μA/(1.8-1.2)V.

Thus I_B=(150 μA/V)(V_i -0.6). (3)

● From the o. c. load line we see that when I_B varies from 0 to 180μA, then I_C varies from 0 to about 37 mA rather linearly with a slope of 37 mA/180 μA=206.

Thus $I_C = 206 I_B$ =206(150 μA/V)(V_i -0.6)=

(30.9 mA/V)(V_i-0.6) (4)

● Now $V_o = V_{CE} = V_{CC} - R_c I_C$ =8-200Ω(30.9mA/V)(V_i-0.6)

or V_o= 8-6.18(V_i-0.6) (5)

(iii) Now, for $1.8 < V_i \le 3.6$ V, we see from the i. c. load line that I_B increases again linearly with a slope of about (0.48-0.180)mA/(3.6-1.8)V= 0.167 mA/V = 167μA/V. However, the o. c. load line indicates that the output voltage V_{CE} is limited to about 0.33V no matter how big I_B gets. Hence V_o= V_{CE}= $\underline{0.33\ V}$, and

I_C= (V_{CC}-V_{CE})/R_c = (8-0.2)/0.2 = $\underline{38.4\ mA}$

From parts (i), (ii), and (iii) above we plot the following graphs

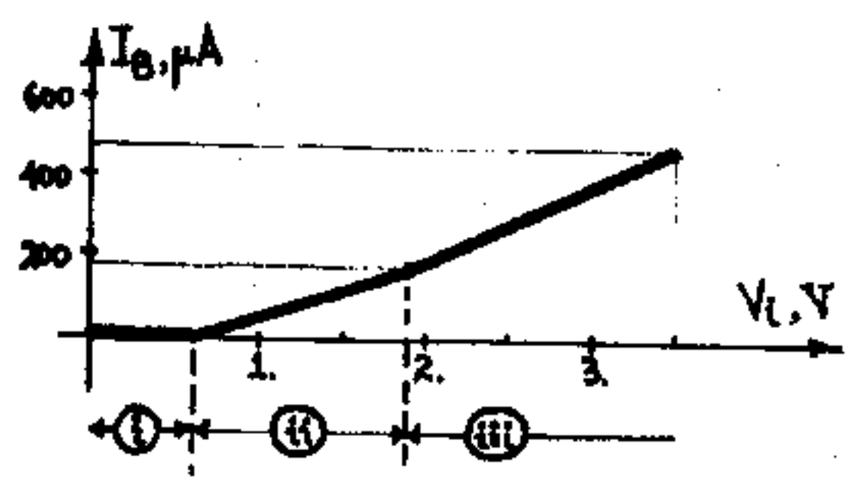

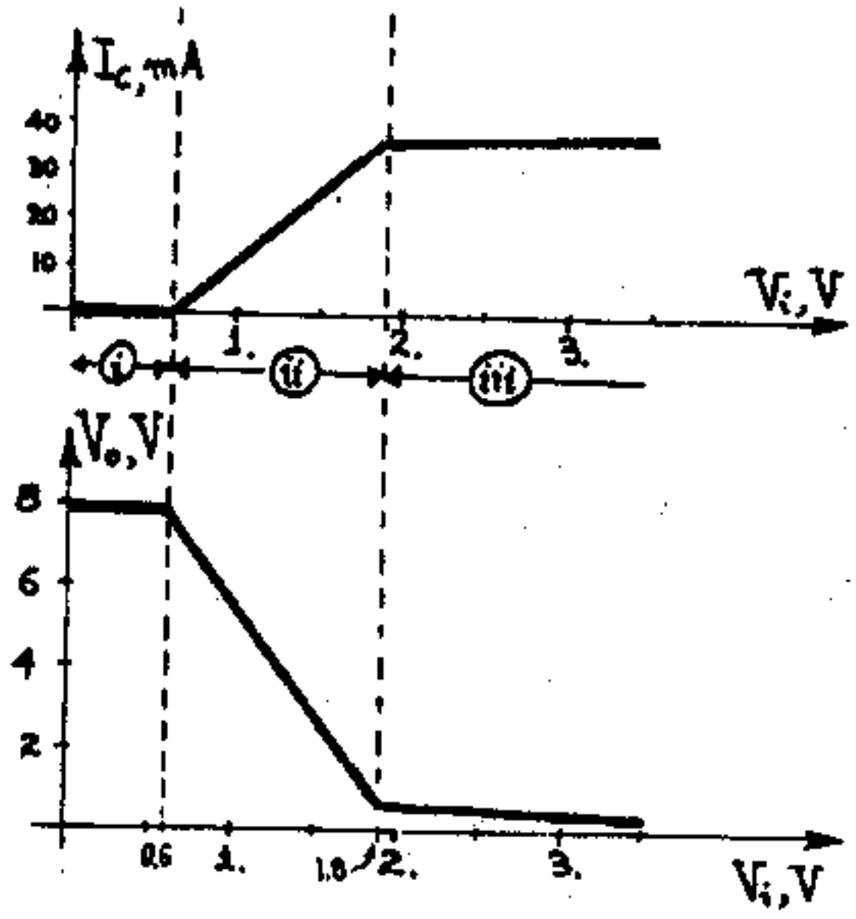

3-9 (a) Since $V_{CE}=6$ V, the transistor is in the active region. Neglecting I_{CO}, $I_C=\beta I_B$ or $I_B=I_C/\beta=12/100$ = 0.12 mA. Applying KVL to the base circuit,

$V_{BB}=R_bI_B+V_{BE}$ or

$R_b=(V_{BB}-V_{BE})/I_B=(6-0.7)/0.12=\underline{44.2\ k\Omega}$

Now apply KVL to the collector circuit;

$V_{CC}=R_cI_C+V_{CE}$ or

$R_c=(V_{CC}-V_{CE})/I_C=(12-6)/12=\underline{0.5\ k\Omega}$

(b) Apply KVL to the base circuit:

$V_{BB}=R_bI_B+V_{BE}+R_e(I_B+I_C)$,

$R_b=(V_{BB}-V_{BE}-R_e(I_B+I_C))/I_B=(6-0.7-0.2x12.12)/0.12$
$\approx \underline{24\ k\Omega}$

Apply KVL to the collector circuit

$V_{CC}=R_cI_C+V_{CE}+R_e(I_B+I_C)$ or

$R_c=(V_{CC}-V_{CE}-R_e(I_B+I_C))/I_C=(12-6-0.2x12.12)/12=$
$\underline{0.298\ k\Omega}$

3-10 Since $V_{CE}=4$ V, the transistor is in the active region. Applying KVL in the collector-emitter loop we get

$$V_{CC}=(I_B+I_C)(R_c+R_e)+V_{CE} \quad \text{or}$$

$I_B+I_C=(V_{CC}-V_{CE})/(R_c+R_e)=(20-4)/(5+0.1)=3.14$ mA

Substituting for $I_C=\beta I_B$ in the above we get

$I_B+100I_B=3.14$ or $I_B=3.14/101=0.0311$ mA

Apply KVL again: $V_{CE}=RI_B+V_{BE}$ and

$R=(V_{CE}-V_{BE})/I_B=(4-0.7)/0.0311\simeq \underline{106\ k\Omega}$

3-11 Applying Thevenin's theorem to the left of the base we obtain the following circuit, where

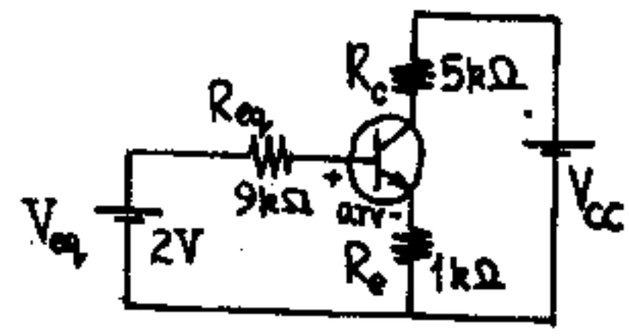

$V_{eq}=(10/100)V_{CC}=0.1x20=2$ V and $R_{eq}=(10x90)/100=$ 9 kΩ

Assume the transistor is in the active region with $V_{BE}=0.7$ V (Table 3-1), and neglect I_{CO}.

KVL around base: $V_{eq}=R_{eq}I_B+V_{BE}+R_e(I_C+I_B)$ or

$2=9I_B+0.7+1(50+1)I_B$ or $60I_B=1.3$, $\underline{I_B=0.0217\ mA}$

and $I_C=\beta I_B=50x0.0217=\underline{1.085\ mA}$

Verify that the collector junction is reverse biased to prove that the transistor is in the active region; thus, prove $V_{CB}>V_{cutin}\simeq -0.5$ V. Indeed, from KVL around the outer loop,

$V_{CC}=R_cI_C+V_{CB}-R_{eq}I_B+V_{eq}$ or

$20=5x1.085+V_{CB}-9x0.0217+2$ or

$V_{CB}=12.77\ V>$ q.e.d.

3-12 (a)

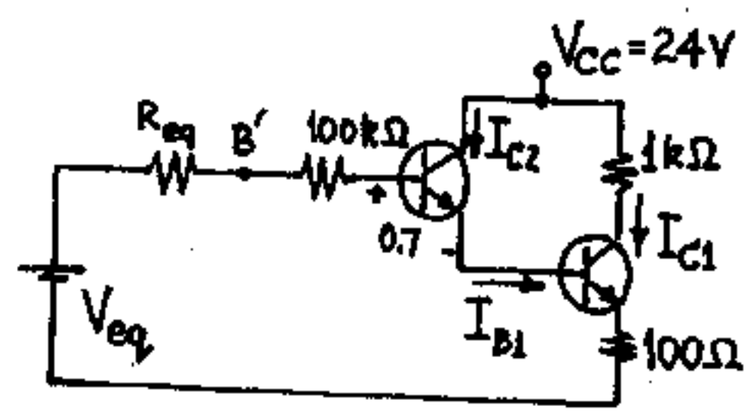

Using Thevenin's theorem, $V_{eq}=(10/92)V_{CC}=2.61$ V and $R_{eq}=10x82/92=8.91$ kΩ. Now, writing KVL for the loop defined by V_{eq}, Q2, and Q1 we obtain:

$V_{eq}=(R_{eq}+0.1)I_{B2}+V_{BE2}+V_{BE1}+0.1(I_{B1}+I_{C1})$ or

$$2.61=108.91I_{B2}+1.4+0.1(I_{B1}+I_{C1}) \qquad (1)$$

Trying to find additional equations we notice that

$I_{B1}=-I_{E2}=-(I_{C2}+I_{B2})=-(\beta_2+1)I_{B2}=51\ I_{B2}$ and

$I_{C1}=\beta_1I_{B1}=\beta_1(\beta_2+1)I_{B2}=100x51\ I_{B2}=5100\ I_{B2}$

Substituting these in Eq. (1) we obtain

$2.61=108.91\ I_{B2}+1.4+0.1(51I_{B2}+5100\ I_{B2})$

$624.01\ I_{B2}=1.21$ or $\underline{I_{B2}=0.00194\ mA=1.94\ \mu A}$

Hence $I_{C2}=\beta_2 I_{B2}=\underline{0.097\text{ mA}}$; now

$I_{B1}=51 I_{B2}=\underline{0.0989\text{ mA}}$

$I_{C1}=5100 I_{B2}=\underline{9.89\text{ mA}}$; $I_{E1}=-(I_{B1}+I_{C1})=\underline{-9.99\text{ mA}}$

$V_{B'N}=100\times 0.00194+0.7+0.7+0.1\times 9.99=2.59$ V

Hence $I_1=(24-2.59)/82=\underline{0.261\text{ mA}}$; $I_2=I_1-I_{B2}=\underline{0.259\text{ mA}}$.

(b) $V_{01}=V_{CC}-1k\Omega\times I_{C1}=24-1\times 9.89=\underline{14.1\text{ V}}$

$V_{02}=-0.1k\Omega\times I_{E1}=-0.1\times -9.99=\underline{0.999\text{ V}}$

3-13 First approximation: $I_B=(8-0.7)/50=0.146\text{ mA}=146\ \mu A$. Draw a load line passing through (8V, OmA) and (OV, 8/0.4=20 mA on Fig. 3-9. The intersection of the load line with the $I_B=146\ \mu A$ curve is in the saturation region and is difficult to read. Call it OV as first approximation. Then $I_C=8/0.4=20$ mA.

Second approximation: From Fig. 3-12 which gives the saturation characteristics, we find (for $I_C=20$ mA and $I_B=146\ \mu A$) $V_{CE}=0.15$ V. Hence the second approximation for I_C is $(8-0.15)/0.4=19.6$ mA. For $V_{CE}=0.15$ V and $I_B=0.146$ mA we find from Fig. 3.10 (the input characteristics) that $V_{BE}\simeq 0.71$ V. Hence $I_B=(8-0.71)/50\simeq 0.146$ mA as before. From Fig. 3-12 at $I_B=146\ \mu A$ and $I_C=19.6$ mA we find $V_{CE}=0.15$V as before. The answers are:

$V_{BE}=\underline{0.71\text{ V}}$ $V_{CE}=\underline{0.15\text{ V}}$ and

$V_{BC}=V_{BE}+V_{EC}=0.71-0.15=\underline{0.56\text{ V}}$

3-14 Assume that the transistor is in saturation. Then

$I_B=(V_{BB}-V_{BE})/R_b=(5-0.8)/R_b=4.2/R_b$

$I_C=(V_{CC}-V_{CE})/R_c=(10-0.2)/4.66=2.10$ mA

For saturation we should have

$I_B>I_C/h_{FE}$ or $4.2/R_b>2.10/100$ or

$R_b<4.2\times 100/2.10=200\ k\Omega$

Hence $(R_b)_{max}=\underline{200\ k\Omega}$

3-15 (a) Applying KVL at the base circuit, we have

$$V_{BB}=R_bI_B+V_{BE}+R_e(I_C+I_B) \qquad (1)$$

Assuming $V_{BE}=0.7$V (Table 3-1) and letting $I_C=\beta I_B=50\ I_B$ we get $10=40I_B+0.7+5(50+1)I_B$. Hence $I_B=\underline{0.0315\text{ mA}}$ and $I_C=\underline{1.575\text{ mA}}$

(b) The collector junction should be reverse biased for Q to be in the active region; hence, we should have for a n-p-n transistor $V_{CB}>V_\gamma=0.6$ V

Again, from KVL

$V_{CC}=R_cI_C+V_{CB}-R_bI_B+V_{BB}$ or

$25=15\times 1.575+V_{CB}-40\times 0.0315+10$ or $V_{CB}=-7.365$ V

Since $V_{CB}<0$, our assumption was wrong.

(c) Assume that Q is in saturation; from Table 3-1 we have $V_{BE}=0.8$ V, $V_{CE}=0.2$ V. With these values of V_{BE} and V_{CE}, equation (1) becomes

$(R_b+R_e)I_B+R_eI_C=V_{BB}-V_{BE}$ or

$$45\ I_B+5\ I_C=9.2 \qquad (2)$$

Apply KVL to the collector circuit; we have

$V_{CC}=R_cI_C+V_{CE}+R_e(I_C+I_B)$ or

$$5\ I_B+20\ I_C=24.8 \qquad (3)$$

If we solve (2) and (3) simultaneously we obtain $I_C=\underline{1.223\text{ mA}}$, $I_B=\underline{0.0686\text{ mA}}$

(d) For saturation, we should have $I_B>I_C/\beta$. Indeed, for the values obtained in part (c),

$0.0686>1.223/50=0.0245$ q.e.d.

(e) The two equations from which I_C and I_B can be obtained are

$$(R_b+R_e)I_B+R_eI_C=9.2$$
$$R_eI_B+(R_e+R_c)I_C=24.8$$

or, in matrix form, $\begin{bmatrix} R_b+R_e & R_e \\ R_e & R_e+R_c \end{bmatrix}\begin{bmatrix} I_B \\ I_C \end{bmatrix}=\begin{bmatrix} 9.2 \\ 24.8 \end{bmatrix}$

Using Crammer's rule we find

$I_B=\frac{1}{\det R}[9.2(R_e+R_c)-24.8R_e]=\frac{1}{\det R}(138-15.6R_e)$

$I_C=\frac{1}{\det R}[(R_b+R_e)24.8-9.2R_e]=\frac{1}{\det R}(992+15.6R_e)$

where R is the coefficient matrix.

For saturation $I_C<\beta I_B$; hence the critical value of R_e is obtained when we let $I_C=\beta I_B$ or

$(992+15.6R_e)=50(138-15.6R_e)$ or $5908=795.6R_e$

and $R_e=\underline{7.426\ k\Omega}$

3-16 (a) Assume the transistor is in the active region. Then, $I_C=\beta I_B$ and, from the base circuit

$$V_{BB}=R_bI_B+V_{BE}+R_e(\beta+1)I_B \qquad (1)$$

$10=50I_B+0.7+2\times 101I_B$ or $I_B=0.0369$ mA

and $I_C=3.69$ mA

To verify our assumption, we note that

$V_{CB}=V_{CC}-R_cI_C+R_bI_B-V_{BB}=25-3\times 3.69+50\times 0.0369-10$

or $V_{CB}=5.78V>0$. Indeed, the transistor is in the active region.

(b) In the active region $V_{CB}\geq -0.5$V. To be conservative let us choose $V_{CB}\geq 0$ or

$V_{CB}=25-3I_C+R_bI_B-10=15-300I_B+R_bI_B\geq 0$

from which $I_B\leq 15/(300-R_b)$ (2)

From (1) we have: $(R_b+202)I_B = 9.3$ or $I_B = 9.3/(R_b+202)$. Hence $9.3/(R_b+202) \le 15/(300-R_b)$

$15(R_b+202) \ge 9.3(300-R_b)$; $24.3R_b \ge -240$

This is satisfied for all values of $R_b > 0$, hence $R_{min} = 0$.

3-17 Applying Thevenin's theorem to the left of the base we obtain $V' = \frac{40}{400}V = 0.1V$ and $R = \frac{360 \times 40}{400} = 36\ k\Omega$.

Similarly, for the circuit seen by the collector, the Thevenin voltage V_{th} and equivalent resistance R_{eq} are given by $V_{th} = \frac{3}{30}(-10) + \frac{27}{30}5 = 3.5$ V (superposition was used here) and $R_{eq} = (3 \times 27)/30 = 2.7\ k\Omega$. Thus the equivalent circuit is

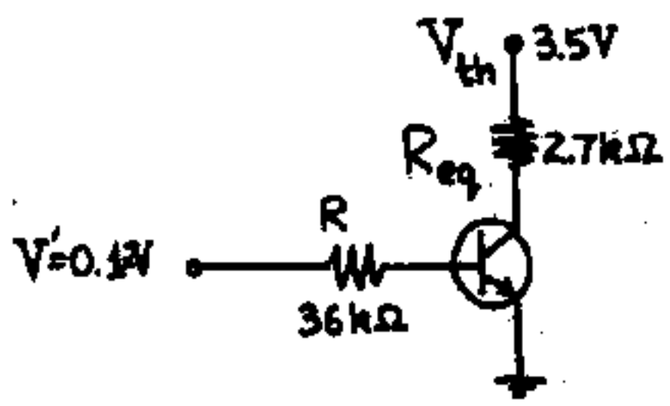

(a) V=15V: Then V'=1.5 V and assume that the transistor is in the active region with $V_{BE}=0.7$ V. From KVL

$$V' = RI_B + V_{BE} \quad \text{or} \quad I_B = (V' - V_{BE})/R \qquad (1)$$

or $I_B = (1.5-0.7)/36 = 0.0222$ mA

Thus $I_C = \beta I_B = 0.888$ mA. To verify our assumption, note that $V_{CB} = V_{th} - R_{eq}I_C + RI_B - V'$ (2)

or $V_{CB} = 3.5 - 2.7 \times 0.888 + 36 \times 0.0222 - 1.5 = 0.399V > 0$.

Hence the collector junction is reverse biased as required in the active region. $V_o = 3.5 - 2.7(0.888) = \underline{1.10\ V}$

(b) V = 30V: Then V' = 3 V and now assume that the transistor is in saturation. Hence $V_{BE} = 0.8$ V, $V_{CE} = \underline{0.2\ V}$, and from (1)

$I_B = (3-0.8)/36 = 0.0611$ mA; similarly,

$I_C = (V_{th} - V_{CE})/R_{eq} = (3.5-0.2)/2.7 = 1.22$ mA.

Since $I_B = 0.0611 > I_C/\beta = 1.22/40 = 0.0306$, the transistor is indeed in saturation.

3-18 We have to find the values of V_i for which the transistor Q enters the cutoff, active, and saturation regions.

<u>Cutoff:</u> Since $V_{BE,act} = 0.7V$, any V_i below 0.7V would have the transistor at cutoff, where: $I_B \approx 0$, $I_C \approx 0$, hence $v_o = V_{CC} - R_cI_C \approx V_{CC} = 5$ V

<u>Active:</u> For values of V_i above 0.7 V and up to a certain voltage, the transistor is in the active region, where $V_{BE} = 0.7$ V and $I_C = \beta I_B$.

Here $I_B = (V_i - V_{BE})/R_b = 0.0833(V_i - 0.7)$ (1)

$$I_C = \beta I_B = 8.33(V_i - 0.7) \qquad (2)$$

$v_o = V_{CC} - R_cI_C = 5 - 2I_C = 5 - 16.66(V_i - 0.7)$

$$\text{or } v_o = 16.66 - 16.66\ V_i \qquad (3)$$

<u>Saturation:</u> Let us find the value of V_i at which Q enters the saturation region, where $V_{BE} = 0.8$ V and $V_{CE} = 0.2$ V. Hence $I_B = (V_i - 0.8)/12$ and $I_C = (5-0.2)/2 = 2.40$ mA.

The transistor enters saturation when $v_o = V_{CE}(sat)$. From (3) $0.2 = 16.66 - 16.66\ V_i$ or $V_i = 0.988$ V. Alternatively, the transistor enters saturation when the value of I_C obtained by Eq. (2) is 2.40 mA or $8.33(V_i - 0.7) = 2.40$ or $V_i = 0.988$ V in agreement with the above value.

Here $I_B' = (V_i - 0.8)/12 = 0.0833(V_i - 0.8)$ for $V_i > 0.988$ V, $I_C = 2.40$ mA $v_o = V_{CE,sat} = 0.2$ V

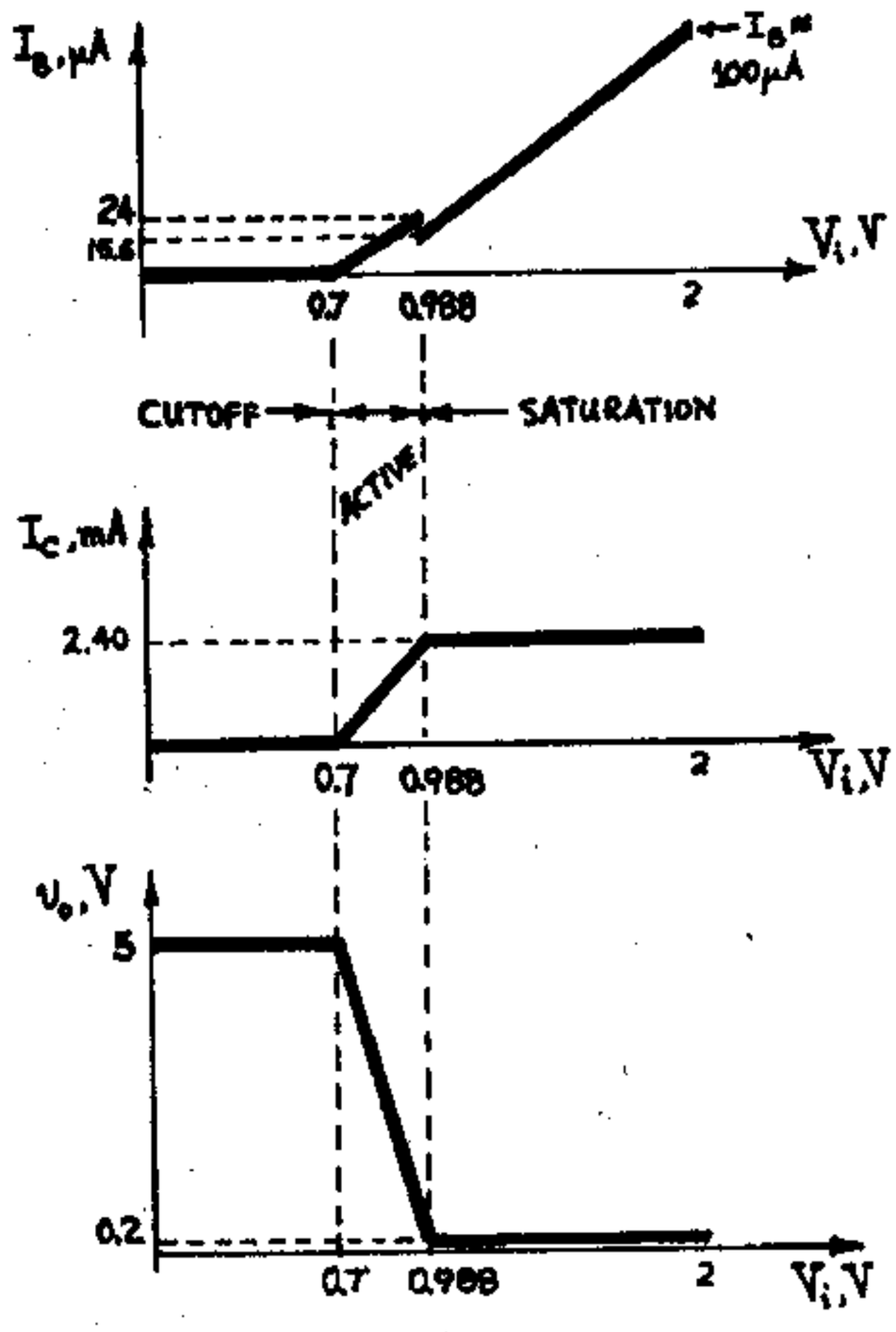

At $V_i = 0.988$ V, $I_B = 0.0833(0.988-0.8) = 0.0156$ mA = 15.6 μA.

The discontinuity of the I_B vs. V_i curve is explained by the abrupt jump assumed for V_{BE} (0.7 to 0.8 V) from active to saturation. Since in real life we have a gradual change rather than a jump, we should expect this curve be smooth around $V_i = 0.988$ V.

3-19 (a) Assume the transistor Q is in the active region. From the base circuit,

$$10 = 100\, I_B + 1(I_B + I_C) \text{ or } 10 = 100\, I_B + I_B + 100\, I_B$$

Hence $I_B = 0.0498$ mA and $I_C = 4.98$ mA

Now verify the assumption by checking if $V_{CB} > 0$.

$$2\, I_C + V_{CB} - 100\, I_B = 0 \text{ or } V_{CB} = 4.98 - 9.96 < 0$$

Therefore, our assumption was wrong and Q is in saturation.

$10 = 100\, I_B + 1(I_B + I_C)$ from the base circuit

$10 = 2\, I_C + 1(I_B + I_C)$ from the collector circuit

Solving we obtain $I_B = 0.0662$ mA, $I_C = 3.31$ mA

Indeed, $I_B > I_C/\beta$ and Q is in saturation.

(b) $V_o = 10 - 2\, I_C = 10 - 6.62 = \underline{3.38\ V}$

(c) For saturation we have to have $I_B > I_C/\beta$ or $\beta > I_C/I_B = 50$. Hence $\underline{\beta_{min} = 50}$.

3-20 (a) Assume that Q1 is cutoff and Q2 is in the active region. Then the equivalent circuit is

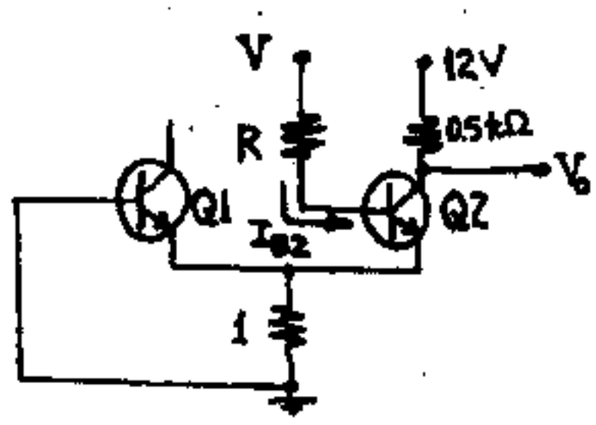

where Thevenin's theorem was used at the base of Q2 to obtain $V = \frac{10}{10+4+1} 12 = 8$ V and

$R = \frac{(4+1)10}{(4+1)+10} = 3.33$ kΩ

Applying KVL to the base circuit of Q2 we obtain $V = R\, I_{B2} + V_{BE} + 1(1+\beta) I_{B2}$ or $I_{B2} = \frac{8-0.7}{3.33+101} =$ 0.070 mA and $I_{C2} = 7.0$ mA. We verify that Q2 is in the active region by proving that

$V_{CB2} > V_{cutin} = -0.5$ V.

$V_{CB2} = 12 - 0.5\, I_{C2} + R\, I_{B2} - V = 12 - 3.5 + 0.233 - 8 = 0.733$ V

Hence $V_o = 12 - 0.5 \times 7 = \underline{8.5\ V}$. Note that $V_{BE1} = -(I_C + I_B)(1) < 0$ thus Q1 is indded in the cutoff region.

(b) For $V_i = 6$ V assume Q2 is at cutoff and Q1 is at saturation. Then we have the following equivalent circuit.

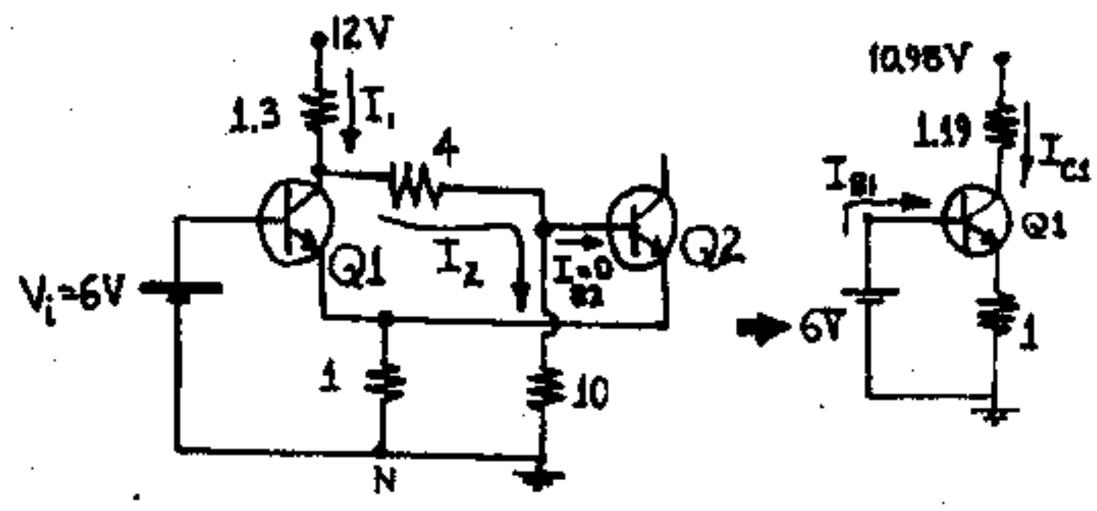

The Thevenin equivalent circuit at the collector of Q1 is obtained as follows

$$V_{eq} = \frac{4+10}{4+10+1.3} 12 = 10.98\ V, \quad R_{eq} = \frac{(4+10)1.3}{4+10+1.3} = 1.19\ k\Omega$$

From the base loop of Q1 we have

$$6 = 0.8 + 1(I_{B1} + I_{C1}) \text{ or } I_{B1} + I_{C1} = 5.2 \qquad (1)$$

From the collector Thevenin equivalent circuit,

$$10.98 = 1.19\, I_{C1} + 0.2 + 1(I_{B1} + I_{C1}) \text{ or } I_{B1} + 2.19\, I_{C1} = 10.78 \qquad (2)$$

Solving (1) and (2) we get $I_{B1} = 0.511$ mA, $I_{C1} = 4.69$ mA Indeed, $I_{B1} > I_{C1}/\beta$ and Q1 is in saturation.

Finally, we verify that Q2 is cutoff.

$V_{C_1,N} = 0.2 + 1(I_{B1} + I_{C1}) = 5.4$ V. Hence

$I_1 = (12 - 5.4)/1.3 = 5.08$ mA $\quad I_2 = I_1 - I_{C1} = 0.39$ mA.

Now $V_{BE2} = -1(I_{B1} + I_{C1}) + 10\, I_2 = -5.2 + 3.9 = -1.3 < 0$, q. e. d.

Hence $V_o = 12 - .5 \times I_{C2} = \underline{12\ V}$

3-21 The small-signal current gain h_{fe} is defined by Eq. (3-16)

$$h_{fe} = \left.\frac{\partial I_C}{\partial I_B}\right|_{V_{CE}} \approx \left.\frac{\Delta I_C}{\Delta I_B}\right|_{V_{CE} = \text{const.}} \qquad (1)$$

Thus, the value of h_{fe} can be obtained from the CE output characteristics and Eq. (1) above.

At $V_{CE} = 6$ V we note that to $\Delta I_B = (160-120) = 40\ \mu A$, corresponds a $\Delta I_C \approx (34-25) = 9$ mA

Hence $h_{fe} = \underline{225}$

(Note that if we work with $\Delta I_B = (120-80) = 40\ \mu A$, we have $\Delta I_C \approx (25-17) = 8$ mA and $h_{fe} = \underline{200}$).

Hence $(h_{fe})_{average} = \frac{225+200}{2} = 212.5$

3-22 (a) Differentiating $I_C = (1+\beta) I_{CO} + \beta I_B$ with respect to I_C yields

$$1 = I_{CO} \frac{d\beta}{dI_C} + \beta \frac{dI_B}{dI_C} + I_B \frac{d\beta}{dI_C}$$

Since $h_{fe} = dI_C/dI_B$, then

$$1-(I_{CO}+I_B)\frac{d\beta}{dI_C} = \beta/h_{fe} \quad \text{where} \quad \beta = h_{FE}$$

$$\text{Hence} \quad h_{fe} = \frac{h_{FE}}{1-(I_{CO}+I_B)dh_{FE}/dI_C} = \frac{h_{FE}}{x} \qquad (1)$$

(b) To the left of the maximum, dh_{FE}/dI_C is positive. Hence $x < 1$ in Eq. (1) above, and $h_{fe} = h_{FE}/x > h_{FE}$.

To the right of the maximum, $dh_{FE}/dI_C < 0$, hence $x > 1$ and $h_{fe} < f_{FE}$.

3-23 (a) From Eq. (3-5) $e^{V_C/V_T} = 1 - \frac{I_C+\alpha I_E}{I_{CO}}$, hence

$$V_C = V_T \ln\left(1-\frac{I_C+\alpha I_E}{I_{CO}}\right)$$

Similarly, we obtain $V_E = V_T \ln\left(1-\frac{I_E+\alpha_I I_C}{I_{EO}}\right)$

(b) From Eq. (3-5) $I_C+\alpha I_E = -I_{CO}\left(e^{V_C/V_T}-1\right)$

Similarly, from (1) $\alpha_I I_C + I_E = -I_{EO}\left(e^{V_E/V_T}-1\right)$

solving these two linear equations, we obtain

$$I_E = \frac{\alpha_I I_{CO}}{1-\alpha\alpha_I}\left(e^{V_C/V_T}-1\right) - \frac{I_{EO}}{1-\alpha\alpha_I}\left(e^{V_E/V_T}-1\right)$$

$$I_C = \frac{\alpha I_{EO}}{1-\alpha\alpha_I}\left(e^{V_E/V_T}-1\right) - \frac{I_{CO}}{1-\alpha\alpha_I}\left(e^{V_C/V_T}-1\right)$$

3-24 (a) Assume the transistor is in saturation. Then

$I_B = (-V_{BB}-V_{BE})/R_b = (20-0.8)/R_b = 19.2/R_B$

$I_C = (V_{CC}-V_{CE})/R_c = (12-0.2)/2 = 5.9$ mA

For saturation we should have $I_B > I_C/h_{FE}$ or

$\frac{19.2}{R_B} > \frac{5.9}{30}$ or $R_b < \frac{19.2 \times 30}{5.9} = \underline{97.6\ k\Omega}$

(b) From Eq. (3-17) we have

$-V_{BB}+R_b I_{CBO} \le 0$ V or $R_b \le V_{BB}/I_{CBO} =$

$20\ V/0.1\ mA = \underline{200\ k\Omega}$

3-25 (a) $I_{CBO}(180^\circ C) = I_{CBO}(25^\circ C) \times 2^{(185-25)/10} =$

10×2^{16} nA $= 6.55 \times 10^5$ nA $= 0.655$ mA. For cutoff we should have

$-V_{BB} + R_b I_{CBO} \le 0$ V or $R_b \le V_{BB}/I_{CBO} =$

$8/0.655 = 12.2\ k\Omega = (R_b)_{max}$

(b) Again $-V_{BB}+R_b I_{CBO}(T) \le 0$

$I_{CBO}(T) \le V_{BB}/R_b = 0.1$ mA or

$I_{CBO}(25^\circ C) \times 2^{(T-25)/10} \le 0.1$ mA

$(10 \times 10^{-6}\ mA)\, 2^{(T-25)/10} \le 0.1$. Hence

$2^{(T-25)/10} \le 10000$.

Taking logarithms, $\frac{T-25}{10}\log 2 \le 4$ or

$\frac{T-25}{10} \times 0.301 \le 4$ and $T \le \underline{157.89^\circ C}$

3-26

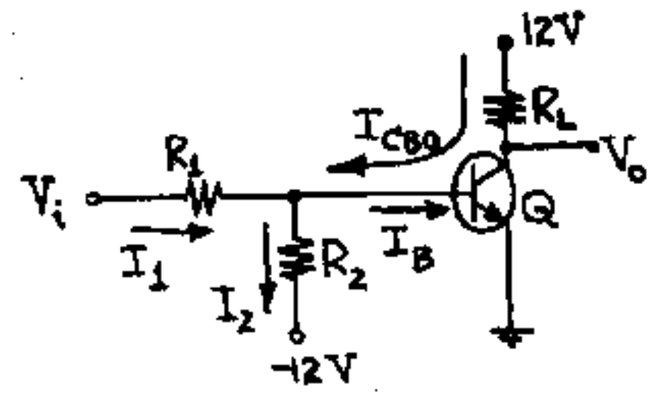

(a) Assume that Q is in saturation. Then

$I_1 = (V_i - V_{BE})/R_1 = (12-0.8)/15 = 0.747$ mA

$I_2 = (12+V_{BE})/R_2 = (12+0.8)/100 = 0.128$ mA

$I_B = I_1 - I_2 = 0.619$ mA. $I_C = (12-V_{CE})/R_L = (12-0.2)/2.2$

$= 5.36$ mA. Since $I_B > I_C/\beta$, Q is indeed in saturation and $V_o = V_{CE} = \underline{0.2\ V}$

(b) Assume that Q is in the active region. Then $V_{BE} = 0.7$ V and $I_C = \beta I_B$. Now

$I_1 = (V_i - V_{BE})R_1 = (12-0.7)/R_1 = 11.3/R_1$

$I_2 = (12+V_{BE})R_2 = (12+0.7)/100 = 0.127$

$I_B = I_1 - I_2 = (11.3/R_1) - 0.127$; hence $I_C = 30 I_B =$

$(339/R_1) - 3.81$. For active operation we should have $V_{CB} > -0.5$ V.

$12 = R_L I_C + V_{CB} + V_{BE} = 2.2\left(\frac{339}{R_1} - 3.81\right) + V_{CB} + 0.7$

Hence $V_{CB} = 19.68 - 745.8/R_1 > -0.5$ or

$R_1 > \underline{36.96\ k\Omega}$

(c) Assume that Q is at cutoff. Then, using superposition $V_{BE} = \frac{100}{115}V_i + \frac{15}{115} \times (-12) =$

$0.870 - 1.565 < 0$

Hence Q is indeed at cutoff and $V_o = \underline{12\ V}$

(d) Apply Thevenin's theorem to the base circuit to obtain

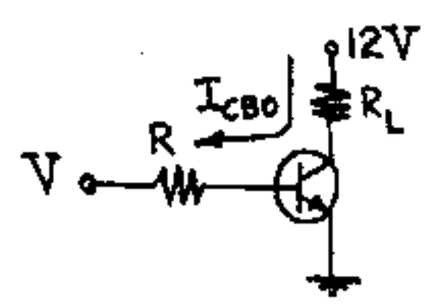

where $V = \frac{100}{115} 1 + \frac{15}{115}(-12) = -0.695$ V

and $R = (15 \times 100)/115 \approx 13.0$ kΩ

To remain at cutoff we should have $V_{BE} \leq 0$ V

$V_{BE} = V + RI_{CBO} = -0.695 + 13 \times I_{CBO}(25^{\circ}C)2^{\Delta T/10} =$

$-0.695 + 13 \times 10 \times 10^{-6} \times 2^{\Delta T/10} \leq 0$ or

$2^{\Delta T/10} \leq 0.695/1.3 \times 10^{-4} = 5.34 \times 10^{3}$

Taking logarithms, $(\Delta T/10)\log 2 \leq 3 + \log(5.34)$ or

$\frac{\Delta T \times 0.301}{10} \leq 3 + 0.728 = 3.728$

$\Delta T = T - 25 \leq 123.85$ and $T \leq 148.85^{\circ}C$

3-27 (a) The width, W, of the depletion region is given by Eq. (2-15)

$W^2 = 2\epsilon V_j / qN_A$, where V_j is the junction voltage, and is given by

$V_j = V_o - V_d$ (V_o is the contact voltage and V_d is the applied voltage). According to the convention of Sect. 2-6, $V = -V_d$ and, since V_o is of the order of mV, we can assume that $V_j = V$. Now, punch-through occurs when $W = W_B$ and Eq. (2-15) becomes.

$V = qN_A W_B^2 / 2\epsilon$

From Eq. (1-15) $\rho_B = (q\mu_p N_A)^{-1}$, $\rho_E = (q\mu_n N_D)^{-1}$, and we are given that $\rho_B \gg \rho_E$, hence $N_D \gg N_A$.

Combining the above equations, we get

$V = (2\epsilon\mu_p)^{-1} W_B^2 / \rho_B$. Substituting for the constants, $(\epsilon = \epsilon_r \epsilon_o = 12 \times 8.849 \times 10^{-12}\ F/m = 1.06 \times 10^{-12}\ F/cm^{*})$

$V = \left(2 \times 1.06 \times 10^{-12} \times 500\right)^{-1} W_B^2/\rho_B = 9.42 \times 10^{8} W_B^2/\rho_B$

(b) Here $V = 9.42 \times 10^{8} \times (2 \times 10^{-4}\ cm)^2 / (1\ \Omega\text{-cm}) = \underline{37.68\ V}$

* Appendix A-1

CHAPTER 4

4-1 1. Start with a p-type Si wafer, 5-6 mils thick with resistivity of 10 Ω-cm.

2. Grow an epitaxial n-type layer (0.5 Ω-cm) 1 mil thick.

3. Grow a 5000 Å thick SiO_2 layer on the surface of the epitaxial layer.

4. Apply photoresist material, expose to the isolation region pattern, develop, etch SiO_2 and strip photoresist.

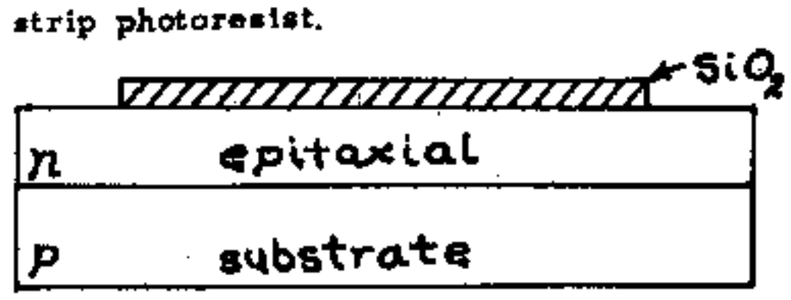

5. Diffuse p+ impurity (Boron).

6. Grow SiO_2.

7. Photoresist etc. (as in step 4) to define the base region.

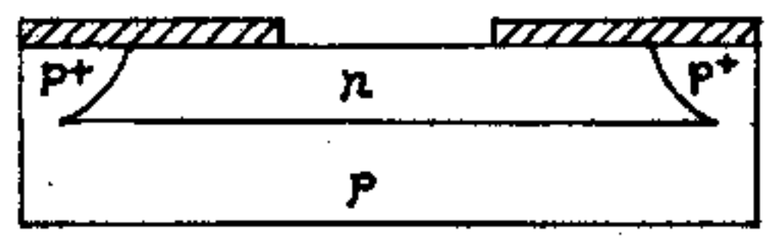

8. Diffuse p impurity (Boron) into base region.

9. Grow SiO_2.

10. Photoresist etc. to define emitter stripe and collector contacts.

11. Diffuse n+ impurity.

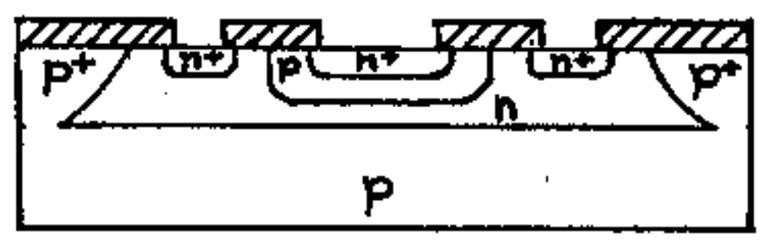

12. Grow SiO_2.

13. Photoresist etc. to define "windows" where contacts to Si are to be made.

14. Vacuum evaporate Al over entire surface.

15. Photoresist etc. to define connection pattern, remove undesired Al.

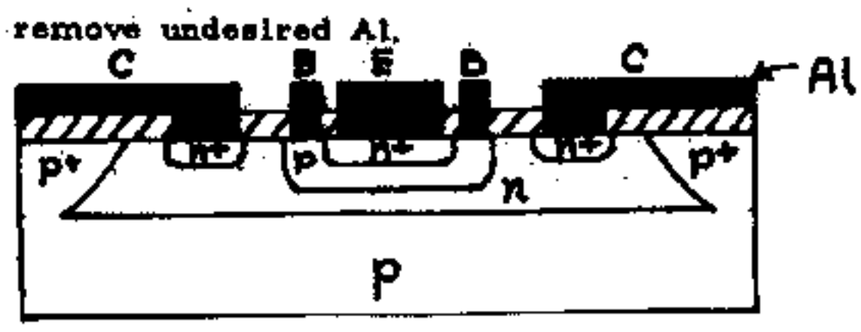

16. Test.

17. Scribe and break.

18. Bond chip onto header.

19. Bond wires from chip to header leads.

20. Encapsulate.

Monolithic npn Si transistor. Note drawings not to scale.

4-2 The emitter width is 2 μm and the base width is 0.7 μm.

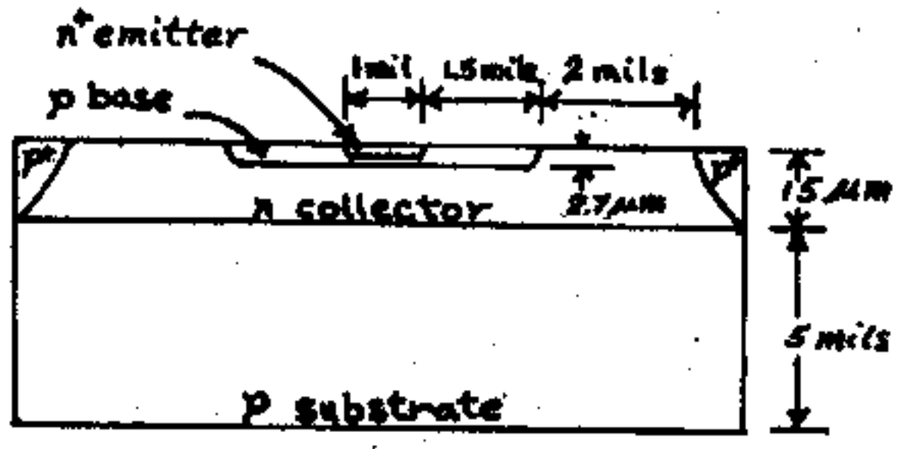

4-3 (a) 10^{16} atoms/cm^3

(b) 2.7 μm, 2.0 μm

(c) 0.7 μm

(d) 5×10^{18} atoms/cm^3

(e) 10^{21} atoms/cm^3

4-4 (a)

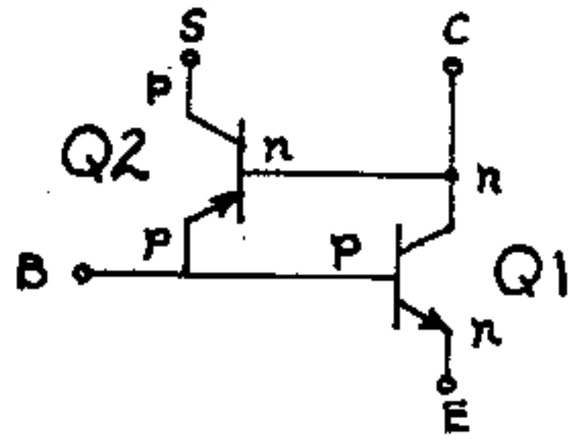

(b)

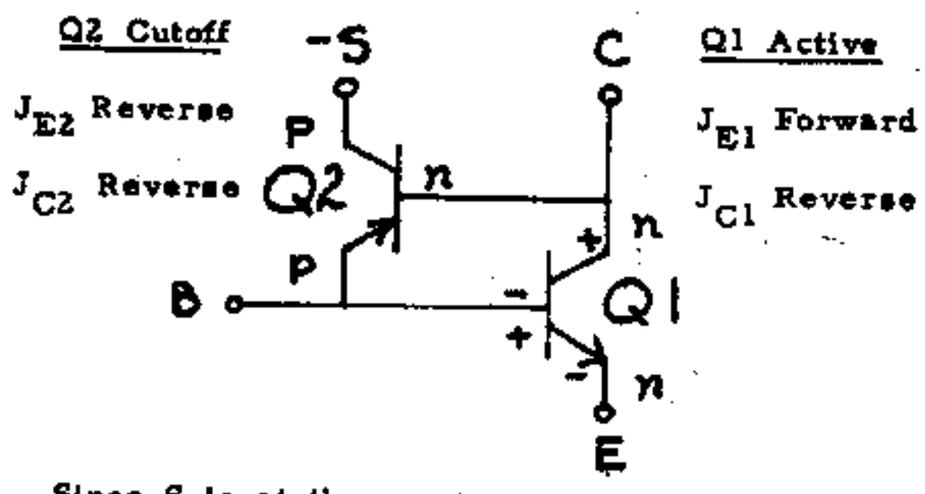

Since S is at the most negative voltage in the circuit, J_{C2} is always reverse biased. From the figure we see that J_{E2} is also reverse biased. Hence Q2 is beyond cutoff.

(c)

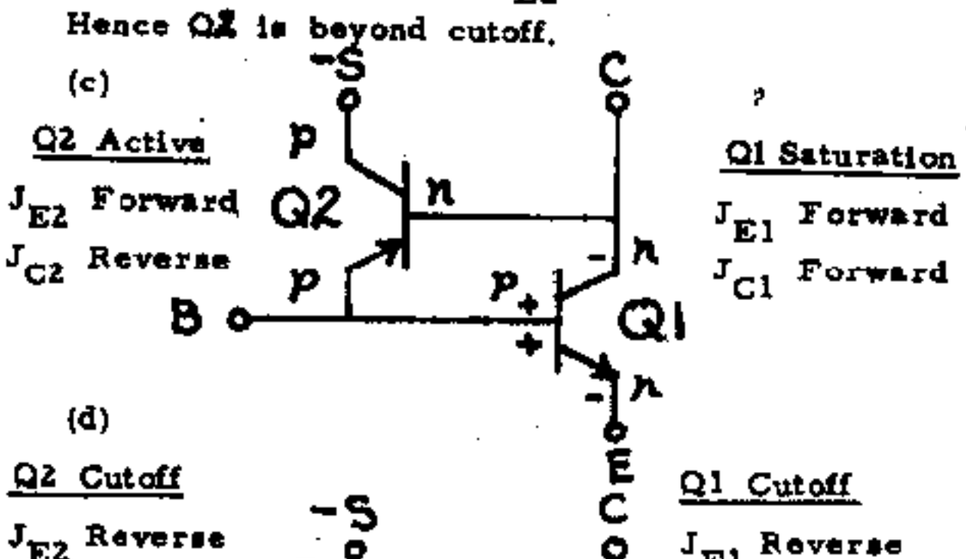

(d)

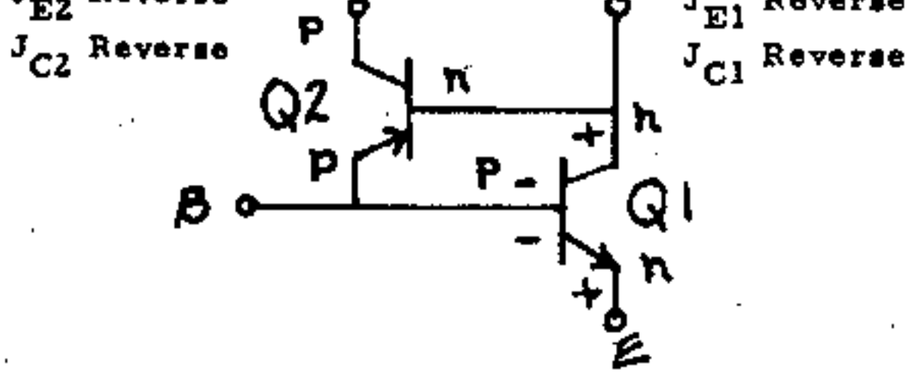

4-5

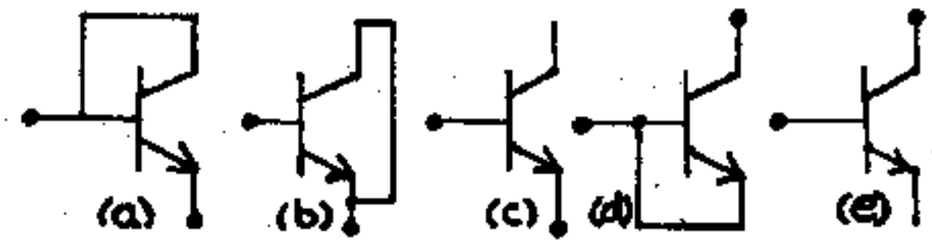

Connection (a) has the lowest forward voltage drop, since the transistor operates in its active region and thus the base current is very small resulting in a small base-to-emitter voltage. Connection (e) has the highest breakdown voltage, equal to B V_{CBO} of the transistor. Refer to Sec. 3-12.

4-6

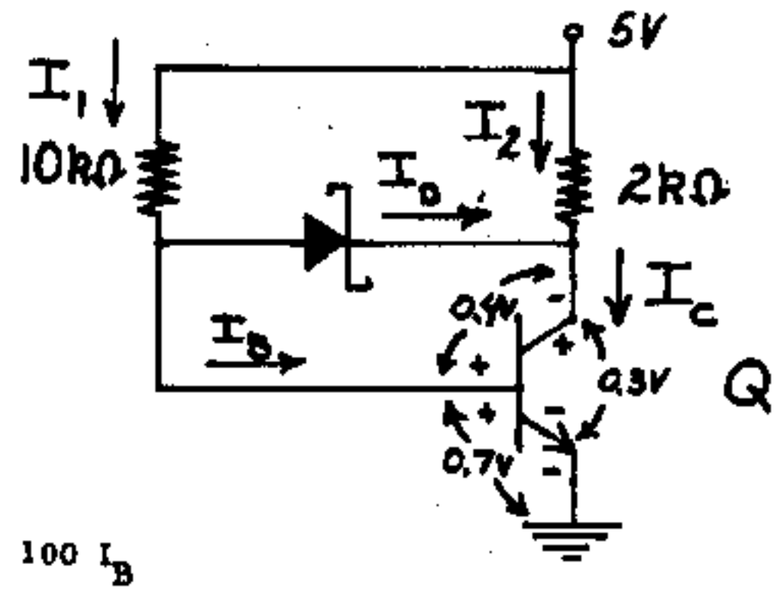

$I_C = 100\ I_B$

$V_{BE(active)} = 0.7$ V

$V_{CE} = 0.7 - 0.4$ V $= 0.3$ V

$I_1 = \frac{5-0.7}{10} = 0.430$ mA

$I_2 = \frac{5-0.3}{2} = 2.350$ mA

$I_C = I_2 + I_D = 2.350 + I_D$

$I_B = I_1 - I_D = .430 - I_D$

$I_C = 100\ I_B = 43.0 - 100\ I_D = 2.350 + I_D$

$101\ I_D = 43.0 - 2.350 = 40.65$

$I_D = 0.4025$ mA

$I_C = 2.350 + 0.4025 = \underline{2.753}$ mA

$I_B = \frac{I_C}{100} = \underline{0.0275}$ mA

4-7 From Eq. (4-7), we have $R = R_S \frac{\ell}{w}$

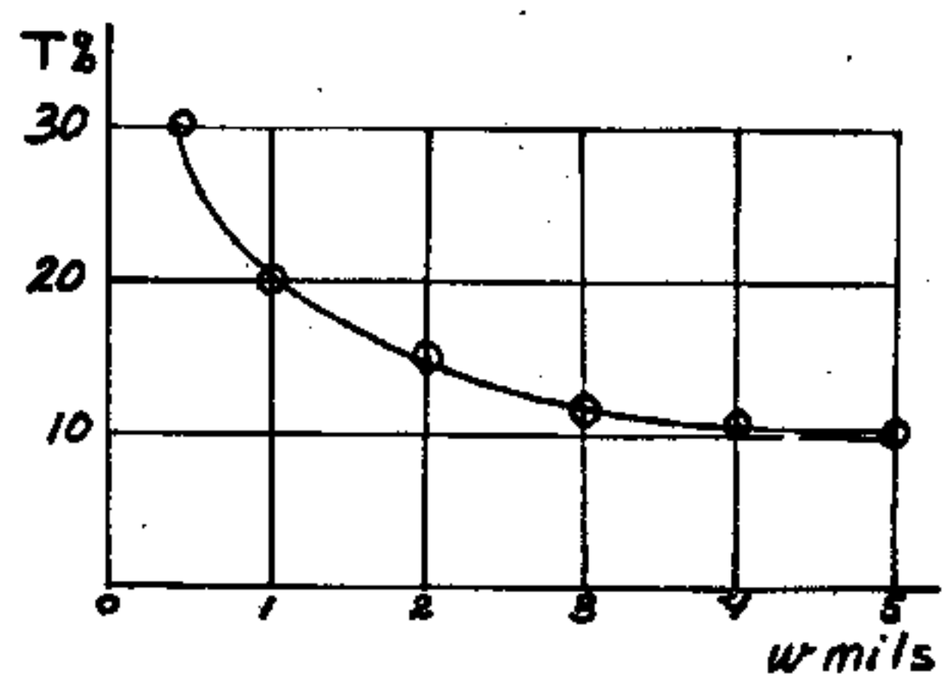

taking the difference gives

$$\Delta R = \Delta R_S \frac{\ell}{w} - R_S \frac{\ell}{w^2} \Delta w$$

$$\frac{\Delta R}{R} = \frac{\Delta R}{R_S \ell/w} = \frac{\Delta R}{R_S} - \frac{\Delta w}{w}$$

$$T = \frac{\Delta R}{R} \times 100 = \pm 10 \mp \frac{0.1}{w} \times 100$$

The largest value of $|T|$ occurs if both terms have the same sign. Hence, $|T| + \frac{10}{w}$ % where w is in mils.

w	0.5	1	2	3	4	5
T	30	20	15	13.3	12.5	12

4-8 From Eq. (4-2) $R_S = \frac{\rho}{y}$ Ω/□

where $\rho = \frac{1}{\sigma} = \frac{1}{(N_D - N_A) q \mu_n} =$

$$\frac{1}{(10^{17} - 5\times10^{16}) 1.60\times10^{-19} \times 1,300} = 0.096 \ \Omega\text{-cm} \quad \text{and}$$

$y = 1$ mil $= 2.54\times10^{-3}$ cm

Hence $R_S = \frac{0.096 \ \Omega\text{-cm}}{2.54\times10^{-3}\text{cm}} = 37.8$ Ω/□

4-9

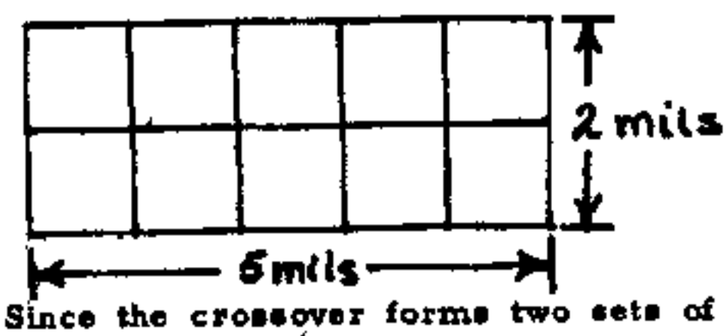

(a) Since the crossover forms two sets of 5 squares in parallel its resistance is

$$R = \frac{2.4 \ \Omega/\square \times 5\square}{2} = 6.0 \ \Omega$$

(b) For Al $\rho = 2.8\times10^{-6}$cm. From Eq. (4-3)

$$R = \frac{\rho \ell}{yw} = \frac{2.8\times10^{-6}\times5}{.4\times10^{-6}\times2} = 0.175 \ \Omega$$

4-10 (a) From Eq. (4-3) $\ell = \frac{R_w}{R_S} = \frac{20\times10^3}{200}(1) = 100$ mil

(b) $w = \frac{R_S \ell}{R} = \frac{200\times1}{20} = 10$ mil

4-11 From Eq. (2-15) in MKS units, the capacitor thickness is

$$W = \left(\frac{2\epsilon V_B}{q N_A}\right)^{\frac{1}{2}} = \left(\frac{2\times1.062\times10^{-10}\times1.5}{1.60\times10^{-19}\times10^{22}}\right)^{\frac{1}{2}}$$

$W = 4.46\times10^{-7}$m

where we used Appendix A1 for $\epsilon = \epsilon_r \epsilon_o = 12\times8.849\times10^{-12} = 1.062\times10^{-10}$

From Eq. (2-17)

$$C = \frac{\epsilon A}{W} = 1.062\times10^{-10} \times \frac{2000(2.54\times10^{-3}\times10^{-2})^2}{4.46\times10^{-7}}$$

$C = 307$ pF

4-12 $C = \frac{\epsilon_r \epsilon_o A}{W}$ Eq. (2-17)

$$\epsilon_r = \frac{CW}{\epsilon_o A} = \frac{.4\times10^{-12}\times5\times10^{-8}}{8.849\times10^{-12}(2.54\times10^{-3}\times10^{-2})^2}$$

$\epsilon_r = 3.5$ which agrees with the value quoted in text.

4-13 From Eq. (2-17)

$$A = \frac{CW}{\epsilon_r \epsilon_o} = \frac{200\times10^{-12}\times5\times10^{-8}}{3.5\times8.849\times10^{-12}}$$ where ϵ_o is given in Appendix A1.

1 mil $= 2.54\times10^{-5}$m

$$A = \frac{3.23\times10^{-7}}{(2.54\times10^{-5})^2} \approx 500 \text{ mils}^2$$

4-14 <u>Bottom component C_1 in Fig. 4-2 (Step junction):</u>

$$\sigma = \frac{1}{\rho} = \frac{1}{20} = N_A q \mu_p$$

$$\text{or} \quad N_A = \frac{1}{20\times1.60\times10^{-19}\times500} = 6.25\times10^{14} \text{ cm}^{-3}$$

From Eq. (2-15) and Appendix A1

$$W = \left(\frac{2\epsilon_r \epsilon_o V_B}{q N_A}\right)^{1/2} = \left(\frac{2\times12\times8.849\times10^{-12}\times5}{1.60\times10^{-19}\times6.25\times10^{20}}\right)^{\frac{1}{2}} =$$

$$= 3.26\times10^{-6} \text{ m}$$

From Eq. (2-17)

$$C_1 = \frac{\epsilon_r \epsilon_o A}{W} = \frac{12\times8.849\times10^{-12}\times10\times5(2.54\times10^{-5})^2}{3.26\times10^{-6}} = 1.05 \text{ pF}$$

<u>Side wall components C_2 in Fig. 4-2:</u>

$$\frac{C_2}{A} = 0.1 \text{ pF/mil}^2$$

Hence, $C_2 = 0.1\times(5+10+5+10)\times1 = 3.00$ pF

Total capacitance $= C_1 + C_2 = 1.05 + 3.00 = 4.05$ pF

4-15 (a) The minimum number of isolation regions is 3: One containing Q1, one containing Q2 and one containing both R_1 and R_2.

(b) The maximum number of isolation regions is 4, or one per component.

4-16 (a) There are 3 independent collectors. Hence, the minimum number of isolation regions is 3, for the transistor. All resistors can be placed in one isolation island which must be connected to the most positive potential in the circuit, which is at terminal 3. However, the collectors of Q2 and Q3 are tied to terminal 3. Hence all resistors and Q2 and Q3 can be placed in the same isolation island, called B in the sketch. The minimum number of islands is 3. A contains Q1 and C contains Q4, Q5 and Q6.

(b) See sketch.

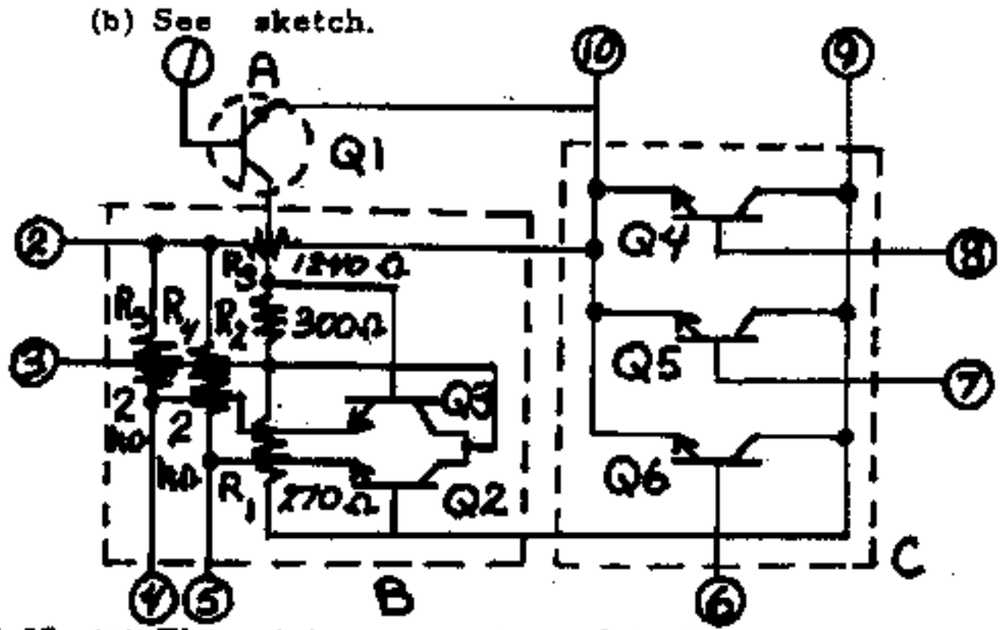

4-17 (a) The minimum number of isolation regions is 4. (1) Q1 and Q4 with all resistors, (2) Q2 (3) Q3 (4) Q5 (see the explanation given in the preceeding problem).

(b) See sketch.

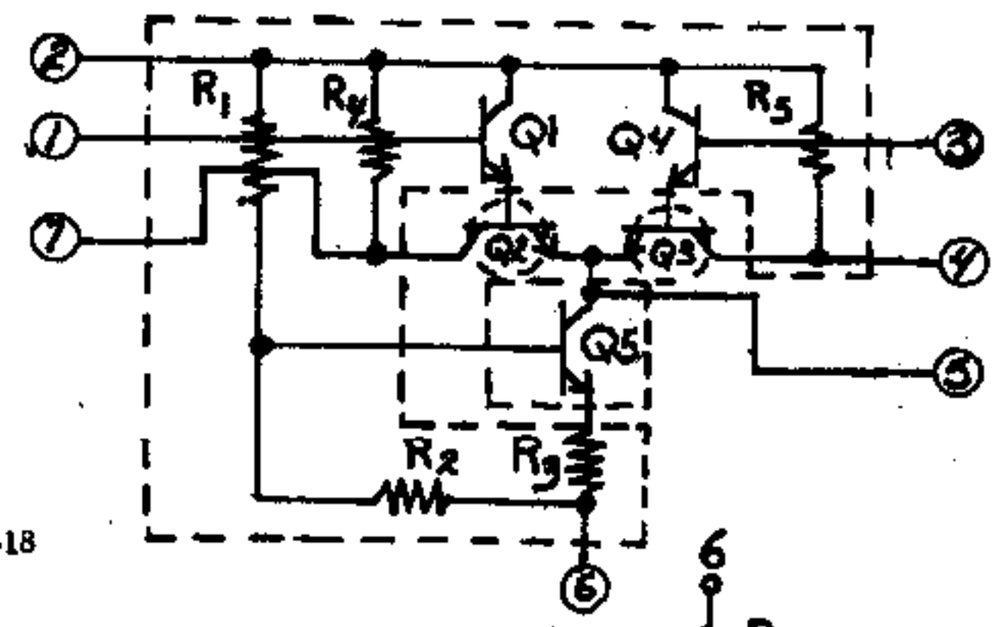

4-18

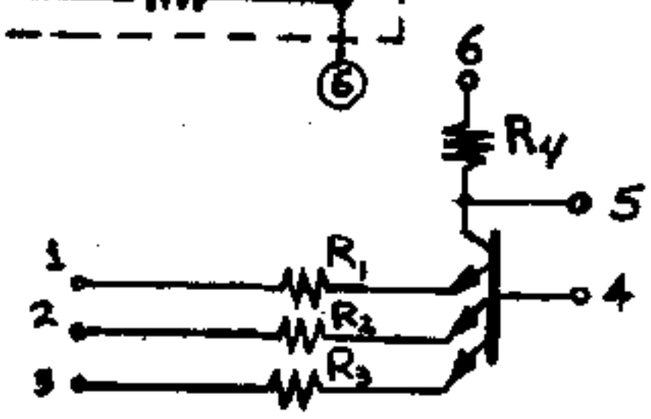

4-19 (a) 2 isolation islands A and B. All resistors are in A which is connected to the most positive voltage V_{cc}. Since the collector of Q1 and Q2 are tied together then these can both be placed in one island, B.

(b)

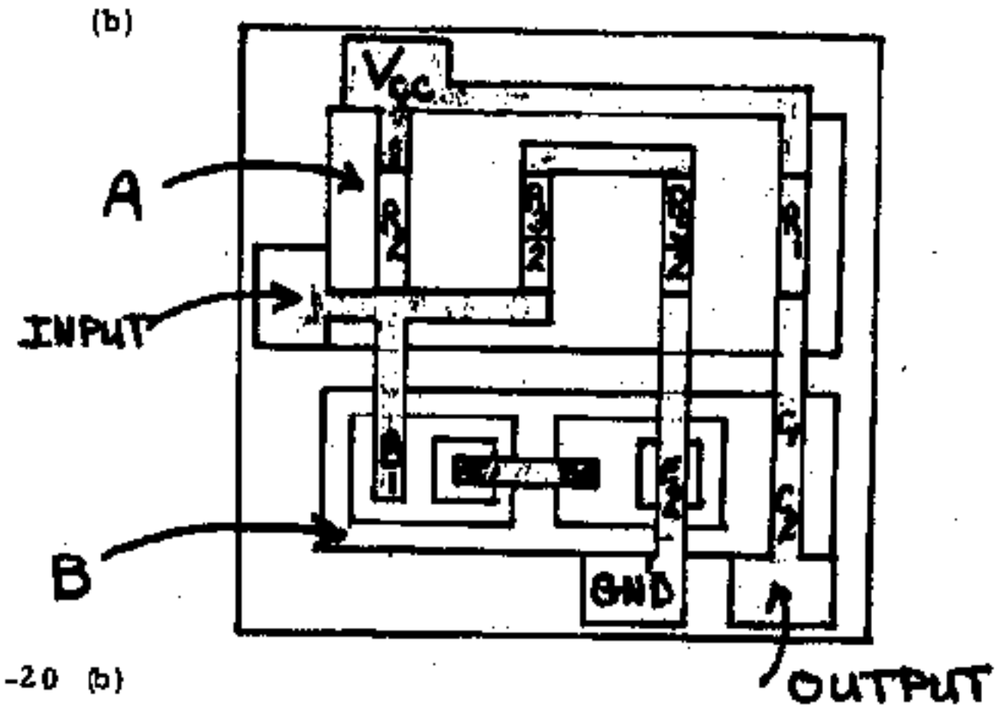

4-20 (b)

4-21 (d)
4-22 (c)
4-23 (a)
4-24 (b)
4-25 (d)
4-26 (b)
4-27 (c)
4-28 (c)
4-29 (a)
4-30 (d)
4-31 (c)
4-32 (d)
4-33 (d)
4-34 (d)
4-35 (b)

CHAPTER 5

5-1 a) $753 = 512 + 128 + 64 + 32 + 16 + 1$

$= 2^9 + 2^7 + 2^6 + 2^5 + 2^4 + 2^0$

$= 10111101$

b) $432 = 256 + 128 + 32 + 16$

$= 2^8 + 2^7 + 2^5 + 2^4$

$= 110110000$

c) $258 = 256 + 2$

$= 2^8 + 2^1$

$= 100000010$

5-2 $V(0) > V(1)$, hence we use negative logic; using Eq. (5-1) we have

a) $V_o = V_R - [V_R - V(1) - V_\gamma] \cdot \frac{R}{R + R_s} = 12 - [12 + 2 + 0.6] \frac{10}{10.6}$

$= 12 - 13.4 \times \frac{10}{10.6} = \underline{-0.641\ V}$

b) $V_0 = 10 - [10 + 2 - 0.6] \frac{10}{10.6} = 10 - 10.755 = \underline{-0.755\ V}$

c) $V_0 = 14 - [14 + 2 - 0.6] \frac{10}{10.6} = 14 - 14.528 = \underline{-0.528\ V}$

d) $V_0 = 0 - [2 - 0.6] \frac{10}{10.6} = \underline{-1.320\ V}$

e) When all inputs are at V(1), the Eq. cct is as shown.

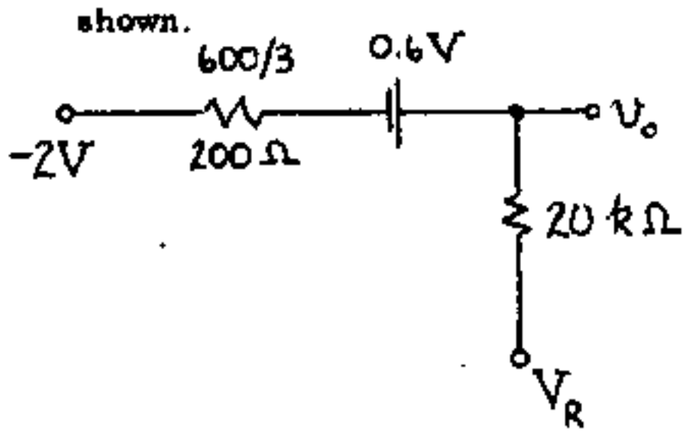

Using superposition to find v_o we obtain:

for part a) $V_0 = 12 \frac{0.2}{10.2} + (-2 + 0.6) \frac{10}{10.2} = \underline{-1.137\ V}$

for part b) $V_0 = 10 \frac{0.2}{10.2} + (-2 + 0.6) \frac{10}{10.2} = \underline{-1.176\ V}$

for part c) $V_0 = 14 \frac{0.2}{10.2} + (-2 + 0.6) \frac{10}{10.2} = \underline{-1.098\ V}$

for part d) $V_0 = 0 + (-2 + 0.6) \frac{10}{10.2} = \underline{-1.373\ V}$

If any or all inputs are at V(1), then the output should be $V(1) = -2$ V for an OR gate. All the above cases satisfy this criteria. However, when all inputs are high (at $V(o) = +12$ V), then

a) all diodes are OFF, $\therefore$ $V_0 = +12$ V

b) all diodes are OFF, $\therefore$ $V_0 = +10$ V

c) all diodes are ON, and $V_0 = 14 \frac{0.2}{10.2} + 12.6 \frac{10.0}{10.2}$

$= 12.627$ V

d) all diodes are OFF, $\therefore$ $V_0 = 0$ V

Hence, only a, b and c satisfy the OR function.

5-3 For $v_A = v_B = 2\ V = V(o)$ assume all diodes are ON

$V_p = 2 - 0.7 = 1.3$ V

$V_0 = V_p + V_\gamma = 1.3 + 0.7 = 2\ V = V(o)$

Thus verifying line 1 of the truth table.

current through $20\ k\Omega = \frac{5-2}{20} = 0.150$ mA $= I_1$

Since this current is in the direction to forward bias D3, it is ON.

current through $10\ k\Omega = \frac{V_p + 5}{10} = \frac{6.3}{10} = 0.63$ mA $= I_2$

current through each of the diodes D1 and D2 =

$\frac{I_2 - I_1}{2} = \frac{0.630 - 0.150}{2} = 0.240$ mA

This is also in the forward dirction, thus D1 and D2 are also ON.

For $v_A = 2\ V = V(o)$ and $v_B = 4\ V = V(1)$ and vice versa: Assume D1 is OFF and D2, D3 are ON.

$V_p = 4 - 0.7 = 3.3$ V and hence D1 is reverse biased by $3.3 - 2 = 1.3$ V and is OFF

$V_0 = V_p + 0.7 = 4$ V, thus verifying lines 2 & 3 of the truth table.

current through $20\ k\Omega = \frac{5-4}{20} = 0.05$ mA $= I_1$

current through $10\ k\Omega = \frac{5 + 3.3}{10} = 0.83$ mA $= I_2$

current through D2 $= I_2 - I_1 = 0.83 - 0.05 = 0.78$ mA

Since the currents are in a direction so as to forward bias D2 and D3, they are ON.

For $v_A = v_B = 4\ V = V(1)$, assume all diodes are ON

$V_p = 4 - 0.7 = 3.3$ V

$V_o = 3.3 + 0.7 = 4$ V

current through $20\ k\Omega = \frac{5-4}{20} = 0.05$ mA

current through $10\ k\Omega = \frac{3.3 + 5}{10} = 0.83$ mA

current through D1 and D2 $= \frac{0.83 - 0.05}{2} = 0.390$ mA

all diodes are On as assumed as all currents are in the forward direction.

Note that there is no level shift between input and output because of D3 since the drop across D3 is opposite to that across D1 or D2.

5-4 If the input voltage is greater than 0V, then the output equals the input with the larger voltage.

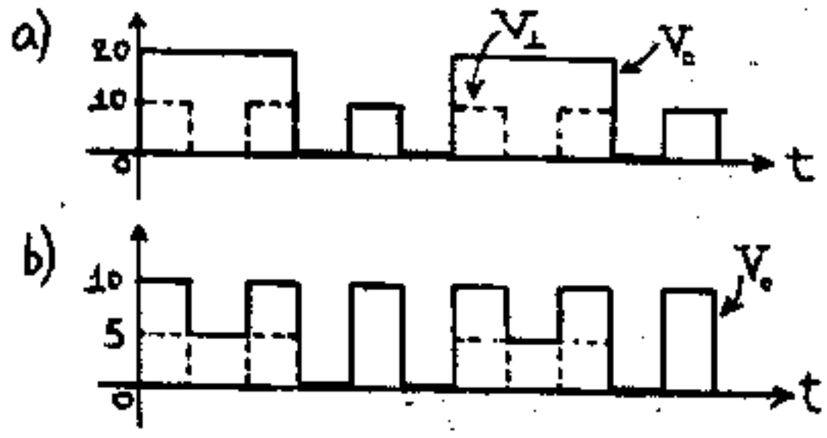

5-5 Since the gate is a negative logic OR, it will propagate the most negative input, hence

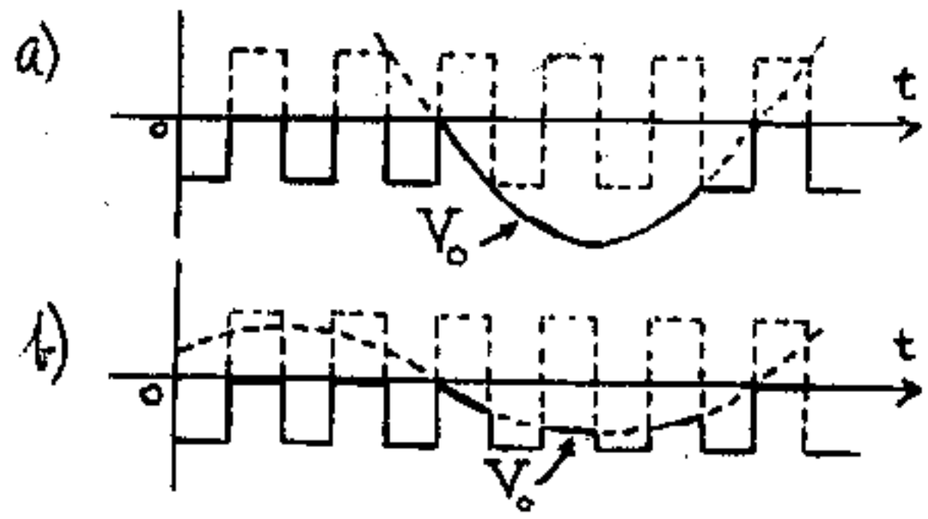

5-6 Since a positive AND gate propagates the less positive input we obtain.

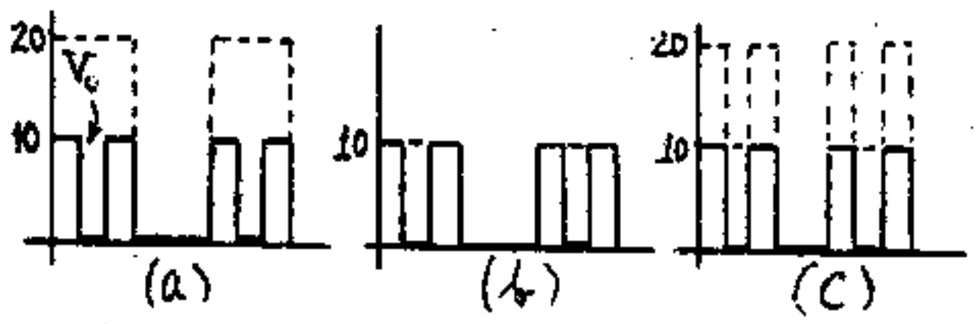

b) When both inputs are at 10 V D_1 and D_2 will be OFF and $V_o = 10$ V. When one input is at 0V and the other at 10 V then the equivalent circuit of the gate is as follows.

$\therefore \quad V_o = \frac{10 \times 1}{10+1} = 0.909$ V

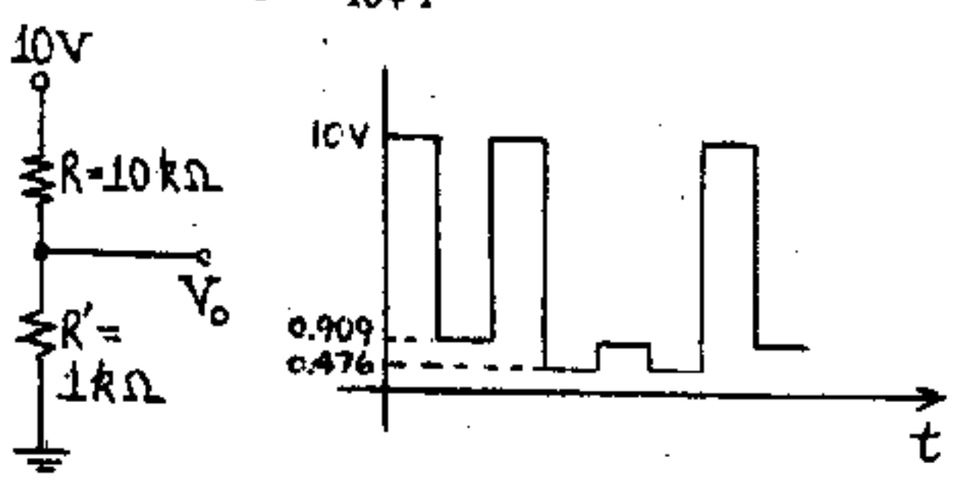

When both inputs are at 0V, then D_1 and D_2 are ON and the output V_o is obtained from the equivalent circuit above with $R' = 0.5$ kΩ

$\therefore \quad V_o = \frac{10 \times 0.5}{10.5} = 0.476$ V

5-7 a) When $v_1 = 0$V and $v_2 = 25$ V, assume D1 and D0 are ON and D2 is OFF

Hence $v_o = 2$ V as desired

D2 is reverse biased by 25 - 2 = 23 V and is OFF

In order that D0 is ON, I_{D0} must be positive

$$I_{R=20\,k\Omega} = \frac{V_R - V_o}{20} = \frac{V_R - 2}{20} \text{ mA}$$

$$I_{D1} = \frac{V_o - V_1}{1} = \frac{2-0}{1} = 2 \text{ mA}$$

Now $I_{D0} = I_{D1} - I_{R=20\,k\Omega}$

$I_{D1} > I_R$ for D0 to conduct.

$2 > \frac{V_R - 2}{20}$ or $V_R < 40 + 2$ and

$\underline{V_{R\,max} = 42 \text{ V}}$

At coincidence, assume all diodes are OFF

$v_o = V_R$ and $V_R > 10$ V for $v_o > 10$ v

$\therefore \underline{V_{R\,min} = 10 \text{ V}}$

hence D0 is reverse biased by at least 10-2 = 8 V and is always OFF for $V_R = 10$ V D1 and D2 are also reverse biased by 25-10 = 15 V and are OFF.

b) If $V_R = 15$ V then all diodes are OFF as above, $v_o = 15$ V and all diode currents are zero.

c) D1, D2 are ON, D0 is OFF; eq. circuit is

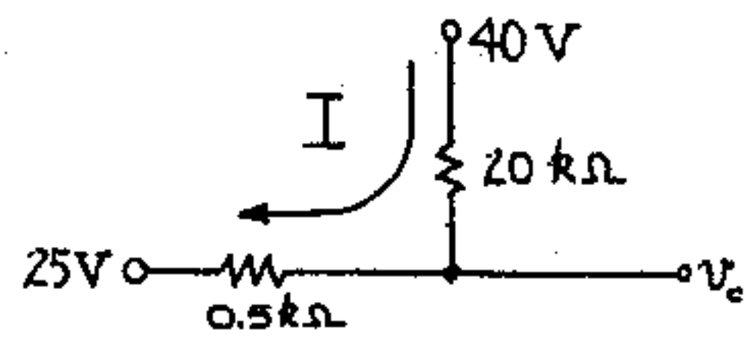

$I = \frac{40-25}{20.5} = 0.732$ mA

$v_o = 40 - 0.732 \times 20 = \underline{25.366 \text{ V}}$

D0 is reverse biased by 25.366 - 2 = 23.366 V and is OFF and current through each diode is

$\frac{0.732}{2} = \underline{0.366 \text{ mA}}$

5-8 a) $R_{f(D0)} = 0.5$ kΩ, $I_{D0} = 6$ mA

The voltage across D0 = $v_o = -0.5 \times 6 = \underline{-3 \text{ V}}$

D1 and D2 are forward biased and the eq. ckt is as shown.

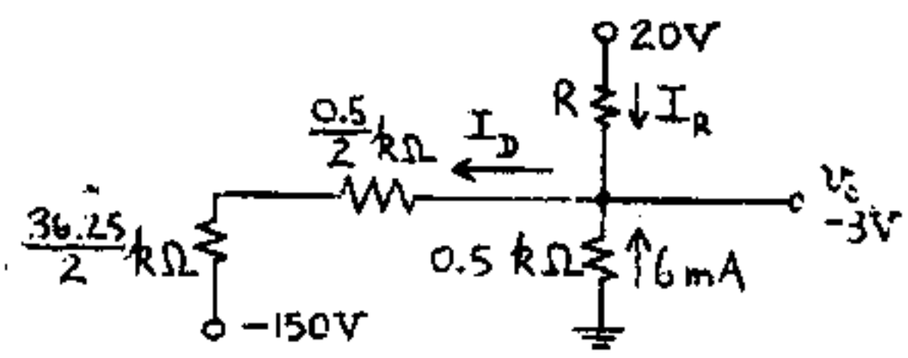

current I_D through both D1 and D2 $= \frac{-3 + 150}{0.5/2 + 36.25/2}$

$$= \frac{147}{18.375} = 8 \text{ mA}$$

current through each diode $= \frac{8}{2} = \underline{4 \text{ mA}} = I_D$

$I_R = I_D - 6 = 2$ mA

Now $I_R = \frac{20+3}{R} = 2$ mA $\therefore R = \frac{23}{2} = \underline{11.5 \text{ k}\Omega}$

b) <u>Approximate solution</u>: if $I_R = 2$ mA and $I_{D1} = 4$ mA then $I_{D0} = 2$ mA and then D0 is ON which means $V_o = -R_f I_{D0} = -1$ V.

<u>Exact solution</u>: we assume D_1 and D_0 are ON; from the equivalent circuit shown:

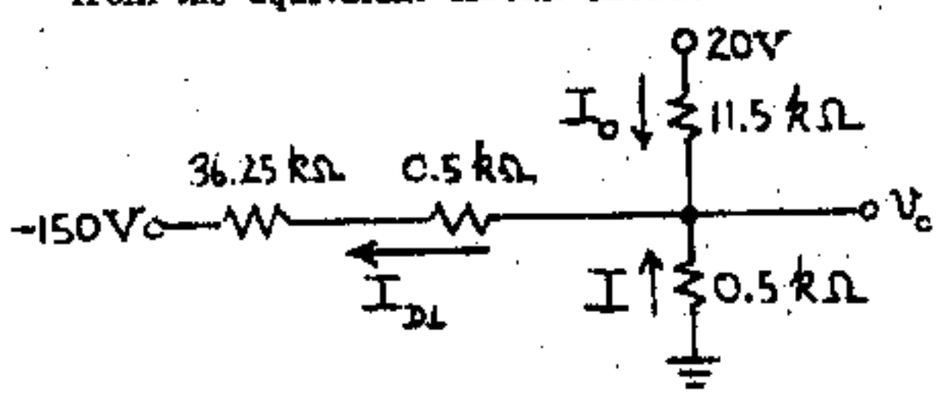

$$I_{D1} = \frac{v_o + 150}{36.75}$$

$$I_0 = \frac{20 - v_o}{11.5}, \quad I = \frac{0 - v_o}{0.5}$$

and $I_{D1} = I + I_0$

$$\frac{v_o + 150}{36.75} = -\frac{v_o}{0.5} + \frac{20 - v_o}{11.5} \quad \text{or}$$

$$11.5\, v_o + 1725 = -882\, v_o + 735$$

$$893.5\, v_o = -990$$

$$\therefore \underline{v_o = -1.108 \text{ V}}$$

c) Since D0 is omitted $I_R = I_{D1} + I_{D2} = 8$ mA.

Knowing $v_o = -3$ V we calculate $R = \frac{20-(-3)}{8}$

$$= \frac{23}{8} = \underline{2.875 \text{ k}\Omega}$$

$$R' = \frac{150 - 3}{4} - 0.5 = \underline{36.25 \text{ k}\Omega}$$

d) If D2 is cutoff then $-20 + I \times 2.875 + I36.75 - 150 = 0$

or $I = \frac{170}{39.625} = 4.290$ mA and

$V_o = 20 - 4.29 \times 2.875 = \underline{7.666 \text{ V}}$ as compared to -1.108 V in part b).

5-9 a) Assume D1 and D2 ON and D0 OFF. For ideal diodes we have $R_f = 0$, $R_r = \infty$ and $V_\gamma = 0$.

The eq. ckt is shown in Fig. (a) below

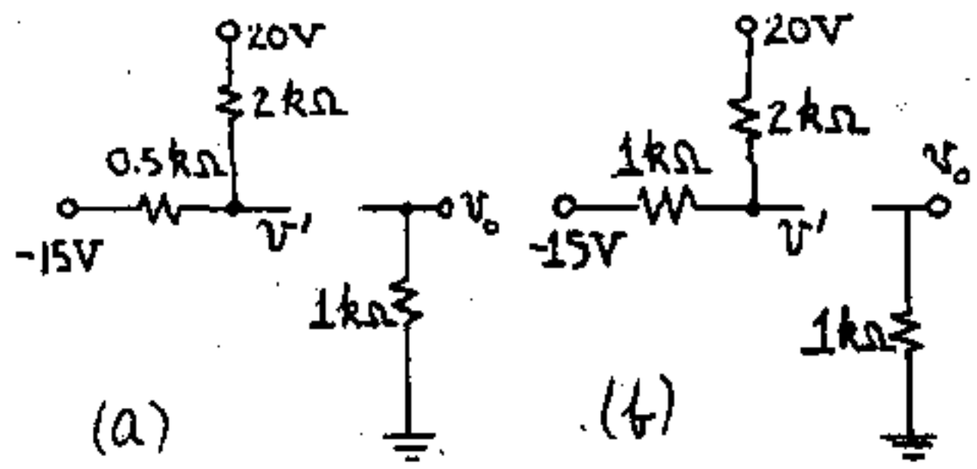

from the above circuit and using superposition:

$$v' = -15\frac{2}{2.5} + 20\frac{0.5}{2.5} = -8 \text{ V} \quad \text{and} \quad v_o = 0 \text{ V}$$

thus D0 is reverse biased by 8 V and is OFF. The current through each diode is $[\frac{-8-(-15)}{0.5}]/2$ and is in the forward direction, so D1, D2 are ON

b) With a +30 V pulse at A, assume D2 ON, and D1 and D0 OFF

$$v' = -15\frac{2}{3} + 20\frac{1}{3} = -3.333 \text{ V}$$

and $v_o = 0$V

D1 is reverse biased by $30 - 3.333 = 26.667$ V and D0 by 3.333 V and are both OFF

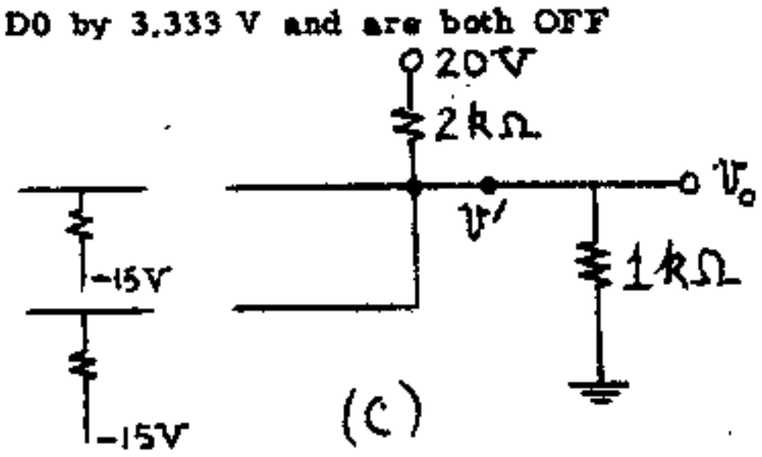

c) with + 30 V at A and B, assume D1 and D2 OFF and D0 ON.

$$\therefore v' = \frac{20 \times 1}{3} = 6.667 \text{ V and } v_o = 6.667 \text{ V}$$

Both D1 and D2 are reverse biased by $30 - 6.667 = 23.333$ V and are OFF.

d) For the circuit to operate properly, the amplitude V_p of the pulse must be large enough to raise the voltage at the cathode of the two input diodes to the value of 6.667 V (thus guaranteing that D1 and D2 will be OFF, while D0 will conduct). Since the quiescent value of the voltage (part <u>a</u>) is at -8 V, the cathode voltage in the presence of a pulse is $V_p + (-8)$. Hence $V_p + (-8) > 6.667$ or $V_p > \underline{14.667 \text{ V}}$

5-10 V(o) = 0 V and V(1) = 10 V, hence we have positive logic.

Let $v_1 = v_A$, $v_2 = v_B$, $v_3 = v_C$, $v_o' = v_X$ and $v_o = v_Y$

Analyzing the subcircuit to the left of X.

i) $V_A = 0V = V_B$ then assume D1 and D2 are ON, and the voltage V_o' at X is $v_o' = 0V$

At this point even if D4 is ON, there is no current flowing through it as $v_o = 0$, and there is no voltage across R_2. Hence all the current from R_1 flows through D1 and D2 and is in a direction to forward bias D1 and D2. Hence they are ON.

ii) $V_A = 0V$, then assume D1 is ON, D2 is OFF Hence $v_o' = 0V$ and D2 is reverse biased by 10 V and is OFF. By the same argument as in part i) D1 is ON.

iii) $V_B = 0V$, $V_A = 10V$, this is identical as ii) with the diodes D1 and D2 interchanged

iv) $V_A = V_B = 10V$, assume D1 and D2 ON.

$\therefore v_o' = 10V$

Hence $X = A\,B$ (a positive AND circuit)

Now consider the circuit to the right of X, with inputs X and C

v) $v_X = v_C = 0V$ then D3, D4 are OFF and $v_o = 0V$, because the current in R_2 is 0. The drop across D3 and D4 is 0V.

vi) $v_X = 0V$, $v_C = 10V$ then D3 is ON and D4 is OFF

$v_o = 10V$ and D4 is reverse biased by 10 V, hence it is OFF.

The current flows through D3, through $R_2(\frac{10}{R_2}$ mA) and is in a positive direction, so D3 is ON.

vii) $v_X = 10V$, $v_C = 0V$: same as vi) with diodes interchanged

viii) $v_X = v_C = 10V$ then D3 and D4 are ON and $v_o = 10V$

Both diodes are ON because the current $= \frac{10}{2R_2}$ through D3 and D4 and is in a positive direction.

Consider the case when maximum current flows through D4. This happens when $v_X = 10V$, $v_C = 0V$. and $v_o = 10V$

$\therefore I_{D4} = \frac{10}{R_2}$

Since $v_o' = 10V$, $I_{R1} = \frac{20-10}{R_1} = \frac{10}{R_1}$

To have D1 and D2 ON, $I_{R1} > I_{D4}$

or $\frac{10}{R_1} > \frac{10}{R_2}$

or $R_2 > R_1$

or $R_{2,min} = R_1$

Now $Y = C + X$ and $X = A.B$

Hence $Y = C + A.B$

5-11 a) If $v_i = 0V$, then $V_B = -\frac{5 \times 5}{25} = -1V$ and the transistor is at cutoff. V_o tends to rise towards $V_{CC} = 20$ V, but at $v_o = 5V$, the diode conducts and clamps the output to 5 V. Hence $V_o = 5$ V.

If $V_i = 5$ V, then the Thevenin's Eq. at the base is:

$$V_{TH} = \frac{5 \times 20}{25} - \frac{5 \times 5}{25} = +3\text{ V} \quad \text{and}$$

$$R_{TH} = \frac{20 \times 5}{25} = 4\text{ k}\Omega$$

Assume that the transistor is saturated, hence $v_o = 0V$ (neglecting junction voltages). Hence the diode is reverse biased and is OFF.

$$\text{Now} \quad I_B = \frac{V_{TH} - V_{BE,sat}}{R_{TH}} = \frac{3-0}{4} = 0.75\text{ mA}$$

$$I_C = \frac{20 - V_{CE,sat}}{2} = \frac{20-0}{2} = 10\text{ mA}$$

To be in saturation $h_{FE} \geq \frac{I_C}{I_B}$ or

$$h_{FE(min)} = \frac{I_C}{I_B} = \frac{10}{0.75} = \underline{13.33}$$

b) When $V_i = 0$ V, Q is OFF

The Thevenin's Equivalent at the base of Q is:

$V_{TH} = -\frac{5 \times 5}{25} = -1V$ and $R_{TH} = 4\text{ k}\Omega$ (as in part a))

The reverse saturation current causes a drop across 4 kΩ opposing -1 V. When this drop exceeds 1 V, the total base voltage will be positive and Q will come ON.

Hence $I_{CO(max)} = \frac{1}{4} = 0.25$ mA.

$$\text{Now} \quad I_{CO(max)} = I_{CO(25)} \times 2^{(T_{max}-25)/10}$$

$$= 5 \times 10^{-3} \times 2^{\frac{\Delta T}{10}}$$

$$\text{or} \quad \frac{250}{5} = 2^{\Delta T/10} \quad \text{or} \quad \ln 50 = \frac{\Delta T}{10} \ln 2$$

$$\text{Hence} \quad \Delta T = \frac{3.91 \times 10}{0.693} = 56.42$$

$$\text{or} \quad T_{max} = \Delta T + 25 = \underline{81.42^\circ\text{ C}}$$

5-12 a) The transistors driven by the gate are in saturation, and the base circuits of these transistors are in parallel. Hence the equivalent circuit is:

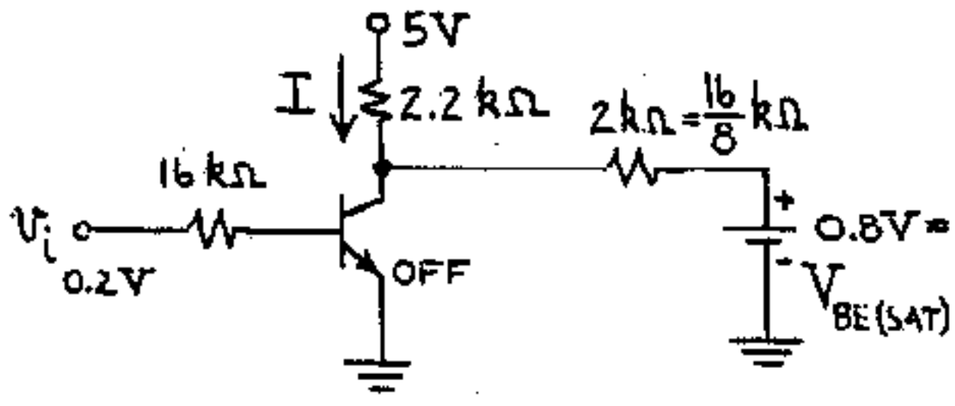

The input $v_i = V(o) = 0.2$ V, and the driving transistor if OFF, and the collector current is 0.

$$I = \frac{5 - 0.8}{2 + 2.2} = 1 \text{ mA.}$$

b) Since I flows into 8 identical circuits, the base current I_B of each transistor is $\frac{1\text{mA}}{8} = 0.125$ mA
The collector current I_C of each transistor is:

$$I_C = \frac{V_{CC} - V_{CE,sat}}{2.2 \text{ k}\Omega} = \frac{5 - 0.2}{2.2} = 2.182 \text{ mA}$$

$$\text{Hence } (h_{FE})_{min} = \frac{I_C}{I_B} = \frac{2.182}{0.125} = 17.456$$

c) $v_o = V(1) = V_{CC} - 2.2I = 5 - 2.2 \times 1 = \underline{2.8 \text{ V}}$

Note that V_o depends upon the fan-out.

d) If $h_{FE} = 50$, $I_B \geq \frac{I_C}{h_{FE}} = \frac{2.18}{50} = 0.0436$ mA to be in saturation. To supply this base current, the minimum base voltage V_B must satisfy:

$$\frac{V_B - 0.8}{16} = 0.0436, \quad V_B = 0.8 + 0.698 = 1.498 \text{ V.}$$

Now the maximum current that the transistor can supply without V_o falling to less than 1.498 V is

$$\frac{5 - 1.498}{2.2} = 1.592 \text{ mA.}$$

Since each fan-out transistor requires at least 0.0436 mA, $N = \text{max fanout} = \frac{1.592}{0.0436} = 36.51$

Hence $\text{Fanout}_{(max)} = 36$.

5-13 a) When the input is low, the transistor must cut off. Hence the worst possible condition is $V_i = 0.5$ V.

When the input is high, the transistor must saturate. Hence the worst possible condition is $V_i = 5$ V.

If $V_i = 5$ V then the circuit is as shown:

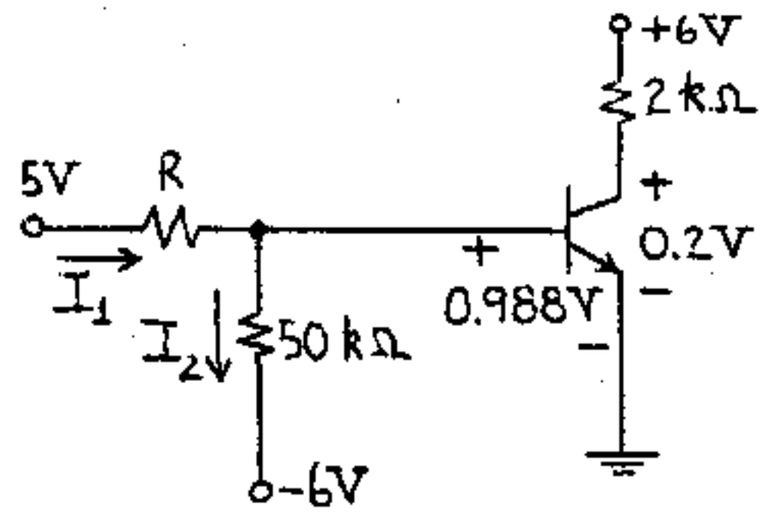

$$V_{BE(sat)}(-50^\circ C) = V_{BE(sat)}(25^\circ C) + 2.5 \times 10^{-3}(25+50)$$

$$= 0.8 + 2.5 \times 10^{-3} \times 75$$

$$= 0.988 \text{ V}$$

$$I_1 = \frac{5 - 0.988}{R} = \frac{4.012}{R} \text{ mA}$$

$$I_2 = \frac{6.988}{50} = 0.140 \text{ mA}$$

$$I_B = I_1 - I_2 = \frac{4.012}{R} - 0.140 \text{ mA}$$

$$I_C = \frac{6 - 0.2}{2} = 2.9 \text{ mA}$$

to be in saturation $I_B h_{FE} \geq I_C$

$$50\left(\frac{4.012}{R} - 0.14\right) \geq 2.9$$

$$\frac{4.012}{R} \geq \frac{2.9}{50} + 0.14 = 0.198$$

$$R \leq \frac{4.012}{0.198} = 20.26 \text{ k}\Omega$$

$$\underline{R_{max} = 20.26 \text{ k}\Omega}$$

If $V_i = 0.5$ V then the transistor must cut off. At $-50^\circ C$ I_{CBO} is $I_{CBO}(25^\circ C)\, 2^{(-50-25)/10}$ $= 10 \times 2^{-7.5} = 0.055$ nA and can be neglected. The voltage at the base is: $V_{BE} = -\frac{6 \times R}{50+R} + \frac{0.5 \times 50}{50+R} \leq 0$

Hence, $-6R + 25 \leq 0$ and $R \geq \frac{25}{6}$ $\quad \therefore \underline{R_{min} = 4.17 \text{ k}\Omega}$

b) At the highest temperature (145°C) the transistor must cut off when $V_i = 0.5$ V

$$I_{CBO}(145^\circ C) = 10^{-5} \times 2^{\frac{T-25}{10}} = 10^{-5} \times 2^{12}$$

$$= 4.096 \times 10^{-2} \text{ mA}$$

assume $V_{BE} = 0$ at cut off, the eq. ckt is:

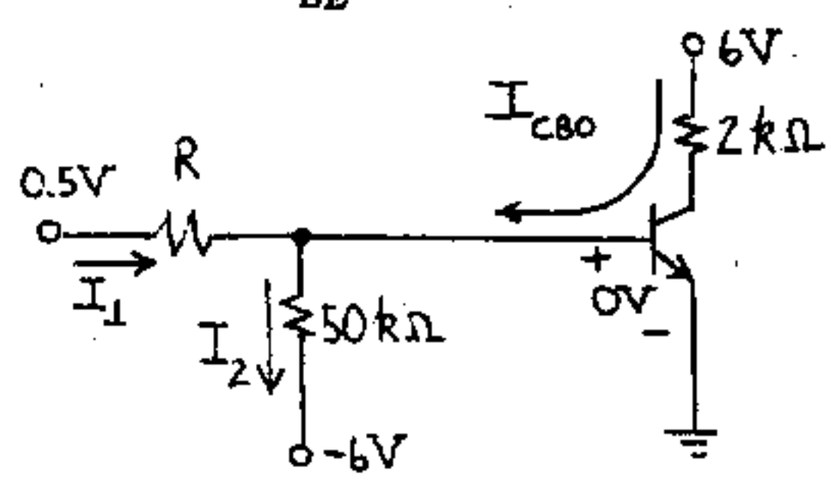

$I_2 = \frac{6}{50} = 0.12$ mA

If $V_{BE} \le 0$ then $I_2 \le 0.12$ mA

$I_1 = I_2 - I_{CBO} = 0.12 - 0.041 = 0.079$ mA

$I_1 \le 0.079$ mA, $\frac{0.5}{R} \le 0.079$

or $R_{min} = 6.33$ kΩ

when $V_i = 5$ V, then the eq. ckt is as in part a) except that

$$v_{BE(sat)}(145^\circ) = 0.8 + 2.5 \times 10^{-3} \times (25 - 145)$$
$$= 0.8 - 0.3$$
$$= 0.5 \text{ V}$$

Now $I_1 = \frac{5-0.5}{R} = \frac{4.5}{R}$ $\quad I_C = \frac{6-0.2}{2} = 2.9$ mA

$I_2 = \frac{6.5}{50} = 0.13$ mA $\quad I_B = I_1 - I_2 = \frac{4.5}{R} - 0.13$

$I_B h_{FE} \ge I_C$ or $150(\frac{4.5}{R} - 0.13) \ge 2.9$

or $R \le 4.5/0.149$ $\quad \therefore R_{max} = 30.20$ kΩ

c) For the circuit to operate correctly over the given temperature range.

use $\underline{R_{max} = \min(20.26 \text{ k}\Omega,\ 30.20 \text{ k}\Omega) = 20.26 \text{ k}\Omega}$

use $\underline{R_{min} = \max(6.33 \text{ k}\Omega,\ 4.17 \text{ k}\Omega) = 6.33 \text{ k}\Omega}$

5-14 SEE AT THE END OF SOLUTIONS FOR CHAPTER 5.

5-15 Output 1, Y_1, is the output of an exclusive OR gate and output 2, Y_2, is the output of an AND gate. Two possible block diagrams are shown below.

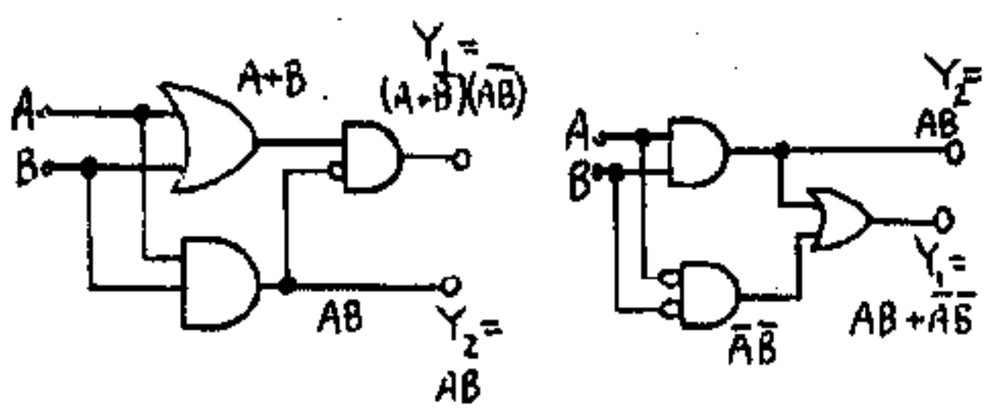

5-16 Let A_1 be the cathode of D5 and A_2 the cathode of D6.

(a) We assume that D1, D2, D3, D4, D5 are conducting and D6 is cut off. Since D1 and D2 are conducting $V_{A1} = 10$ V and $I_{R1} = \frac{10}{5} = 2$ mA.

Since D5 is ON $V_{A1} = \underline{V_o = 10 \text{ V}}$ and

$I_{R2} = \frac{25-10}{10} = 1.5$ mA, and

$I_{D1} = I_{D2} = \frac{1}{2}(I_{R1} - I_{R2}) = \underline{0.25 \text{ mA}}$. Since D3 and D4 are conducting $V_{A2} = 20$ V and

$I'_{R1} = I_{D3} + I_{D4} = \frac{20}{5} = 4$ mA. Also $I_{D3} = I_{D4} = \underline{2 \text{ mA}}$.

We notice that $V_{A2} > V_o$ and our assumption that D_6 is OFF is satisfied. Also since the currents found for each of the other diodes flow from the anode to the cathode of the diodes, this verifies our assumption that D1, D2, D3, D4, D5 are conducting.

(b) We assume that D1, D3 are cut off and the rest of the diodes are conducting. Since D2 is ON $V_{A1} = 20$ V since $V_{A2} > V_1$ our assumption that D1 is OFF is verified. Similarly for D3. Since D5 and D6 are ON then $V_0 = V_{A1} = V_{A2} = \underline{20 \text{ V}}$ and $I_{R2} = \frac{25-20}{10} = 0.5$ mA because of the symmetry of the circuit.

$I_{D5} = I_{D6} = \frac{1}{2} I_{R2} = \frac{0.5}{2}$ mA $= \underline{0.25 \text{ mA}}$.

$I_{R1} = \frac{20 \text{ V}}{5 \text{ k}\Omega} = 4$ mA, and hence the current

$I_{D2} = I_{R1} - I_{D5} = \underline{3.75 \text{ mA}}$. By symmetry I_{D4} also is $\underline{3.75 \text{ mA}}$.

(c) The configuration is OR-AND gate, and the block diagram is as shown below

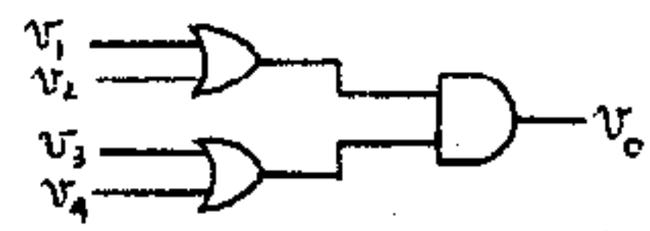

(d) For the circuit to operate properly for the conditions in part (a), I_{D2} and I_{D1} must be greater than 0 or

$$I_{R1} > I_{D5} = \frac{V_R - V(0)}{R_2}$$

and

$$I_{R1} = \frac{V(0)}{R_1} \quad \text{or} \quad R_2 > \frac{V_R - V(0)}{V(0)} R_1$$

If all inputs are low [at V(0) = 10 V] then all diodes conduct and $v_o = V(0)$. Then I_{R1} remains as above but I_{D5} is cut in half. Hence the above inequality remains valid.

For the conditions in (b) $v_o = V(1) = 20$ V,

$$I_{D5} = \frac{V_R - V(1)}{R_2} \quad \text{and} \quad I_{R1} = \frac{V(1)}{R_1}.$$

Hence, I_{R1} is increased and I_{D2} is decreased over case (a) and the inequality remains valid.

The same conclusion is reached if all inputs are at V(1).

5-17 (a) Notice V(0) < V(1) hence we deal with positive logic

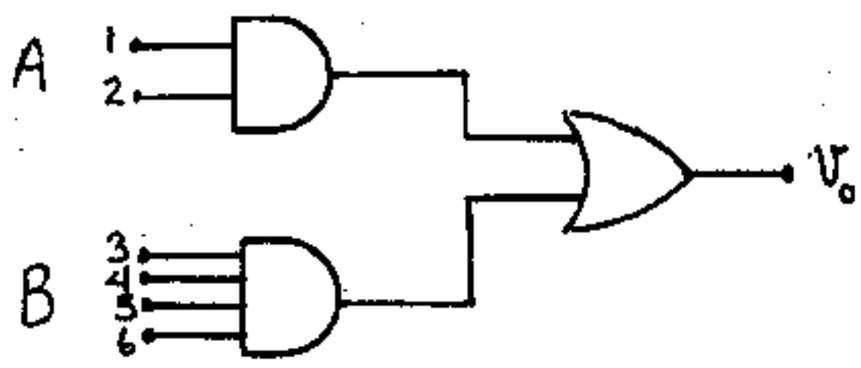

(i) If all the inputs are at V(0) then all input diodes conduct and $V_A = V_B = V(0) = -5$ V. Then the diodes of the OR gate conduct and $V_0 = V(0) = -5$ V.

(ii) In this case assume $V_1 = V(1)$ and $V_2 = V(0)$; then D1 is OFF, D2 is ON, hence $V_A = V(0) = -5$ V; DB is conducting and DA is OFF. All the other diodes are conducting, hence $V_A = V_B = -5$ V $= V(0)$.

(iii) In this case both D1 and D2 are ON $V_A = 0$, V and DA is conducting. Also $V_B = -5$ V and any diode with high input is OFF. Then $V_0 = 0$V and DA will be conducting and DB will be cutoff.

(iv) All diodes conducting $V_A = V_B = V_0 = 0$ V $= V(1)$.

(b) Let R be the new value of the resistor whose value in part a was 2 kΩ. The current through the 10 kΩ resistance will be $\frac{V_o-(-15)}{10}$ and is maximum for $v_o = V(1) = 0$ V. For part (iv) this current is $\frac{15}{10} = 1.50$ mA. Then $I_{DA} = I_{DB} = 0.75$ mA. The current through either one of the R kΩ resistors must be greater than 0.75 mA but this current is $\frac{15-0}{R} \geq 0.75$ or $R \leq \frac{15}{0.75} = 20$ kΩ. If $v_o = V(0) = -5$ V, then the current in the 10 kΩ decreases and that in R is increased. Thus $R_{max} = 10$ kΩ to assure proper operation of the circuit in any case.

5-18 (a) $\overline{A + B + C + \ldots} = \overline{A}\,\overline{B}\,\overline{C}$ Eq. (5-26)

If all inputs are 0 then both sides are 1. If one (or more than one) input is 1 then both sides are 0. Hence, for all possible inputs the left hand side of Eq. (5-26) equals the right hand side.

(b) Using three variables (A, B, C):

A	B	C	A+B+C	$\overline{A}$	$\overline{B}$	$\overline{C}$	$\overline{A}\,\overline{B}\,\overline{C}$	$\overline{A+B+C}$
0	0	0	0	1	1	1	1	1
0	0	1	1	1	1	0	0	0
0	1	0	1	1	0	1	0	0
0	1	1	1	1	0	0	0	0
1	0	0	1	0	1	1	0	0
1	0	1	1	0	1	0	0	0
1	1	0	1	0	0	0	0	0
1	1	1	1	0	0	0	0	0

The last two columns are identical, hence proving Eq. (5-26).

5-19 i) $A + AB = A(1 + B) = A1 = A$

ii) Since $B+1 = 1$ then,

$A + \overline{A}B = A(B+1) + \overline{A}B = AB + A + \overline{A}B$

$= A + B(A + \overline{A}) = A + B$ as $A + \overline{A} = 1$.

iii) $(A + B)(A + C) = AA + AB + AC + BC$

$= A(1+B) + AC + BC$

$= A + AC + BC = A(1+C) + BC$

$= A + BC.$

5-20 (a) $\overline{\overline{(\overline{A} + B) + (\overline{A + \overline{B}})}} + \overline{\overline{(\overline{A}B)(\overline{A\overline{B}})}}$

Applying De Morgan's law

$= \overline{\overline{(\overline{A}+B)}}\,\overline{\overline{(A+\overline{B})}} + \overline{\overline{(\overline{A}B)}} + \overline{\overline{(A\overline{B})}}$

$= (\overline{\overline{A}} + B)(A+\overline{B}) + \overline{A}B + A\overline{B}$ since $\overline{\overline{X}} = X$

$= \cancel{\overline{A}A} + AB + \overline{A}\,\overline{B} + \cancel{B\overline{B}} + \overline{A}B + A\overline{B}$

$= A(B + \overline{B}) + \overline{A}(B + \overline{B})$

$= A + \overline{A}$ since $B+\overline{B} = 1$ and $A1 = A$

$= \underline{1}$

(b) $AB + AC + B\overline{C}$ multiplying the first term by $C + \overline{C} = 1$

$= ABC + AB\overline{C} + AC + B\overline{C}$

$= AC(B + 1) + B\overline{C}(A + 1)$

$= \underline{AC + B\overline{C}}$ since $B + 1 = 1$ and $AC\,1 = AC$

(c) $\overline{AB} + \overline{AB} + AB$

$= A(B + \overline{B}) + \overline{A}B + AB$ since adding AB does not change the function.

$= A + B(A + \overline{A})$

$= \underline{A + B}$

5-21 (a) $(A+B)(B+C)(C+A) = (AB+B+AC+BC)(C+A) =$

$ABC+BC+AC+BC+AB+AB+AC+ABC =$

$BC(1+A)+BC+AC+BC+AB+AB+AC(1+B) =$

$BC+BC+BC+AC+AC+AB+AB =$

$BC+AC+AB$

(b) $(A+B)(\overline{A}+C) = A\overline{A} + AC + \overline{A}B + BC$

$= AC + \overline{A}B + BC(A + \overline{A}) = AC(1+B) + \overline{A}B(1+C)$

$= AC + \overline{A}B$

c) $AB+\overline{B}\overline{C}+A\overline{C}=AB+\overline{B}\overline{C}+(A\overline{C})(B+\overline{B})$

$=AB+\overline{B}\overline{C}+AB\overline{C}+A\overline{B}\overline{C}$

$=AB(1+\overline{C})+\overline{B}\overline{C}(1+A)=AB+\overline{B}\overline{C}$

5-22 Denote the two N-bit characters as

$A_1A_2 \ldots A_N$ and $B_1B_2 \ldots B_N$

compare two bits at a time, and the output is 1 if the outputs from each subcircuit which compares two bits is 1.

The output of a subcircuit which compares A_i and B_i is 1 if both A_i and B_i are simultaneously 0 or 1

$$y_i = \overline{A}_i\,\overline{B}_i + A_i B_i$$

and $$y = y_1 \cdot y_2 \cdot y_3 \cdots y_N$$

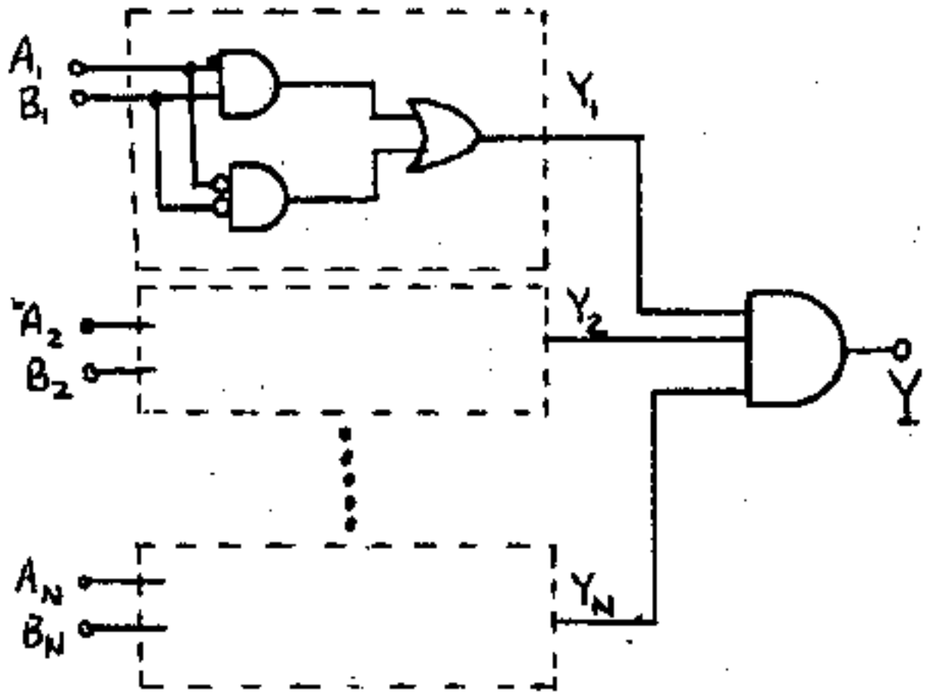

5-23 i) $(A+B)C=Y$ ii) $A+BC=Y$

The logic diagrams are as shown below

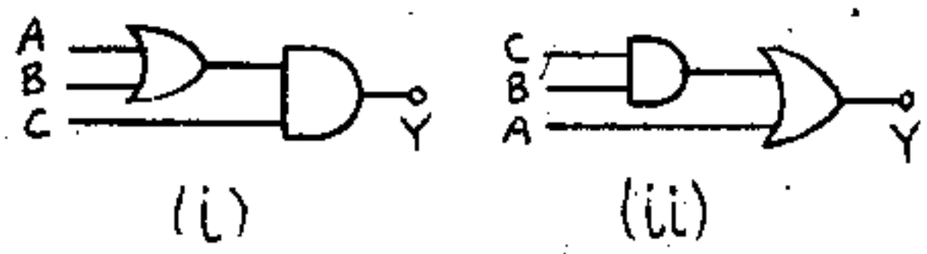

The ambiguity can be avoided in the expression as shown above by proper parenthesis.

5-24 Obviously the function is $Y=(A_1A_2A_3 \oplus B_1B_2)\overline{C}$, where $\oplus$ means exclusive OR operation hence the realization is,

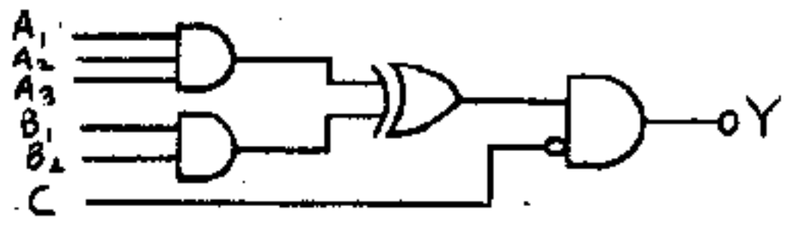

5-25 The function is

$$Y=[(A_1A_2+A_1A_3+A_2A_3)B+(A_1+A_2+A_3)\overline{B}]\overline{A_1A_2A_3}$$

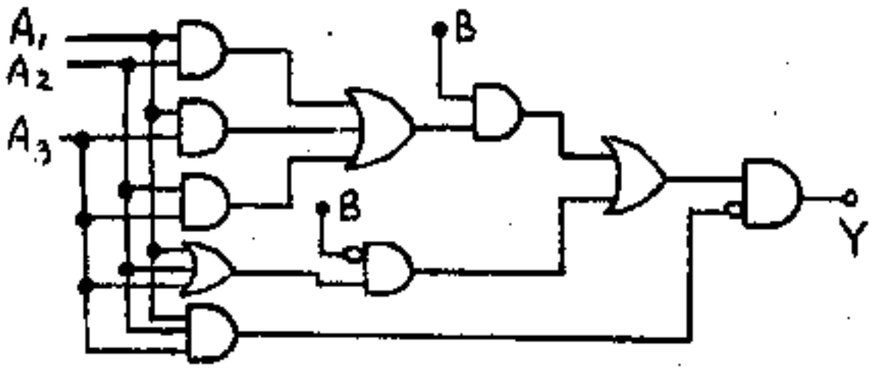

5-26 a)(i) At coincidence as shown in the illustrative example for Fig. 5-14 the input diodes are OFF, and $V_P = 6.40$ V. If the input falls below $6.40-V_\gamma = 6.40-0.6 = 5.80$ V then the diodes will conduct and the circuit will not function correctly.

Hence $12+NM(0) = 5.80$

or $NM(0) = -12+5.80 = \underline{-6.20\ V}$

ii) When one input (say A) is low, then $V_A = V_{CE,sat} = 0.2$ V. Then the diode associated with A conducts while all the others are OFF, and $V_P = 0.2 + 0.7 = 0.9$ V.

Assume because of noise $V_A = 0.2+NM(1)$, then $V_P = 0.9+NM(1)$. For proper operation the transistor must remain in cutoff, and $V_{BE} \le 0.5$ V or

$$V_P \times \frac{100}{115} - 12 \times \frac{15}{115} \le 0.5 \quad \text{or}$$

$$V_P \le \frac{57.5+180}{100} = 2.375 \quad \text{or}$$

$$V_P = 0.9 + NM(1) \le 2.375$$

$$\therefore\ NM(1) \le 2.375 - 0.9 = \underline{1.48\ V}.$$

b) The worst case is when one input is low and the rest of the inputs are high. Then Q must be cutoff. The Eq. ckt for the input is:

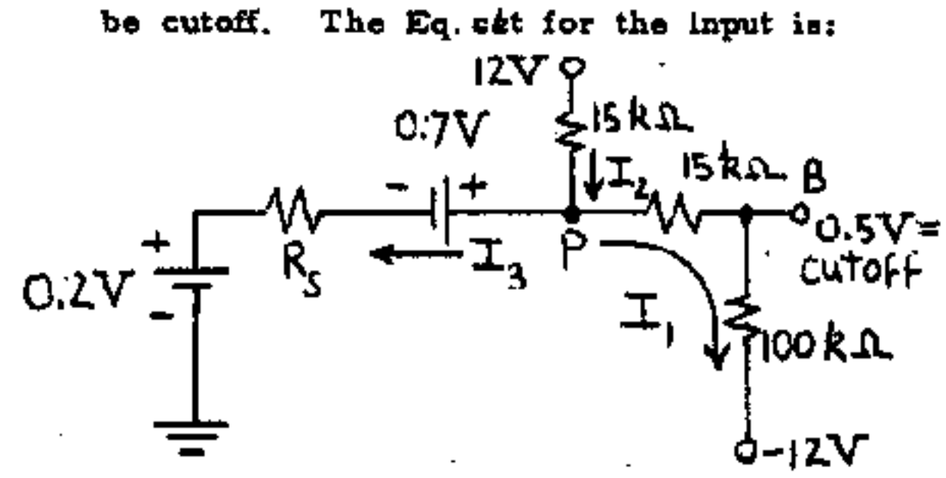

$I_1 = \frac{0.5+12}{100} = 0.125$ mA, $V_P = (0.125)(15)+0.5 = 2.375$ V

$I_2 = \frac{12-2.375}{15} = 0.642$ mA $I_3 = I_2 - I_1 = 0.642-0.125 = 0.517$ mA.

$I_3R_s + 0.9 = V_P$ or $R_s = \frac{2.375-0.9}{0.517} = \underline{2.853\ k\Omega}.$

27 a) When the transistor is in saturation, $V(0)=V_{CE,sat}=0.2$ V.

When the transistor is cutoff the output is clamped to $V_{ON}+8$ V by the diode. Hence $V(1) = \underline{8.7\ V}$, assuming a 0.7 V drop across a conducting diode.

b) If any or all inputs are at $V(0)=0.2$ V, then the diode/diodes connected to the low inputs are ON, and the others are OFF.

Hence $V_P = 0.7+0.2 = 0.9$ V = the voltage at the junction of the two 3.6 kΩ resistors.

$\therefore$ The base voltage $V_{BE} = \frac{0.9 \times 3.6}{36+3.6} - \frac{12 \times 3.6}{36+0.36} = -0.273$ V

∴ The transistor is cut off since $V_{BE} < 0.5 = V$. The output voltage rises towards 12 V, but is clamped to 8.7 V by the clamping diode.

At coincidence assume all diodes are OFF and the transistor is in saturation.

∴ $V_{BE} = 0.8$ V

current through 3.6 K $= I_1 = \frac{12-0.8}{3.6+3.6} = \frac{11.2}{7.2} = 1.556$ mA

current through 36 K $= I_2 = \frac{12+0.8}{36} = 0.356$ mA

∴ $I_B = I_1 - I_2 = 1.556 - 0.356 = 1.2$ mA

$I_C = \frac{12-0.2}{2.4} = \frac{11.8}{2.4} = 4.917$ mA

$(h_{FE})_{min} = \frac{I_C}{I_B} = \frac{4.92}{1.20} = \underline{4.10}$

$V_P = I_1 \times 3.6 + 0.8 = 6.402$ V, and the input diodes are reverse biased and are indeed OFF. The output diode is OFF because it is reverse biased by 8-0.2 = 7.2 V.

Hence the circuit operates as a NAND gate.

c) In part b we found that when the transistor is OFF, $V_P = 0.9$ V. Consider the Thevenin's equivalent at the base of the transistor, then

$V_{eq} = 0.9\frac{36}{39.6} - 12\frac{3.6}{39.6} = -0.273$ V

and Req $= 3.6//36 = \frac{3.6 \times 36}{39.6} = 3.273$ kΩ;

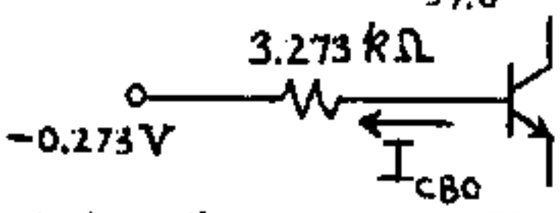

to have the transistor OFF

$I_{CBO} \times 3.273 - 0.273 \le 0.5$

$I_{CBO} \le \frac{0.773}{3.273} = 0.236$ mA, $\underline{I_{CBO}MAX = 0.236 \text{ mA}}$

d) If V(0) = 8 V and V(1) = 0 V, then if either input (or both) are at V(1) = 0 V then the transistor is at cutoff and v_o = 8 V = V(0). If both inputs are at V(0) = 8 V, then Q is in saturation and v_o = 0 V = V(1). But this is the NOR function. Hence the circuit works as a NOR gate for negative logic.

5-28

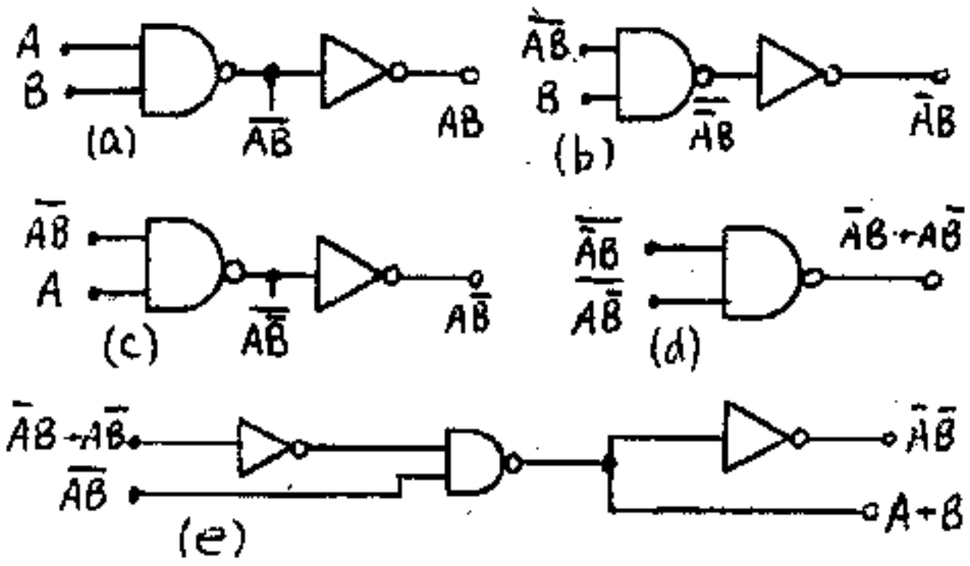

In Fig. (b) on the left

$\overline{(\overline{AB})B} = \overline{(\overline{A}+\overline{B})B} = \overline{\overline{A}B}$

and in Fig. (e)

$\overline{\overline{(\overline{A}B+A\overline{B})}(\overline{AB})} = (\overline{A}B+A\overline{B}) + AB$

$= \overline{A}B+A\overline{B}+AB+AB$

$= B(A+\overline{A})+A(B+\overline{B})$

$= B + A$

∴ We need 5 NAND gates and 5 NOT gates at least.

A simpler solution which requires one more NOT gate is as follows: Use (a) and (d). Replace (b), (c) and (e) as follows.

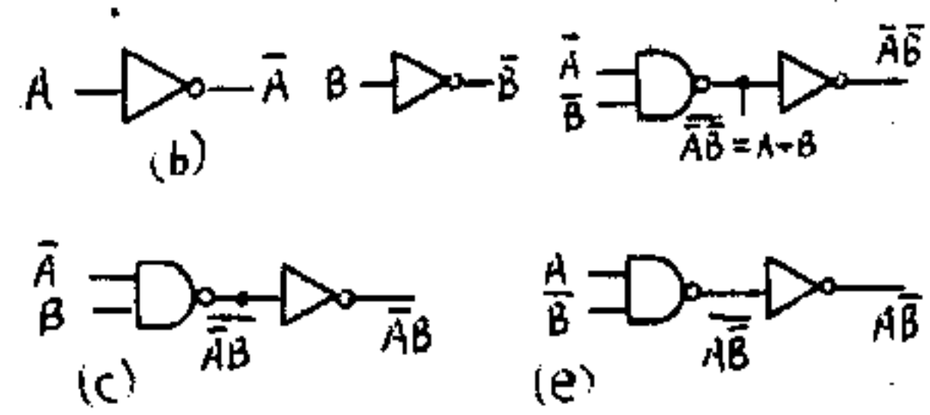

5-29 OR-AND TOPOLOGY NOR-NOR TOPOLOGY

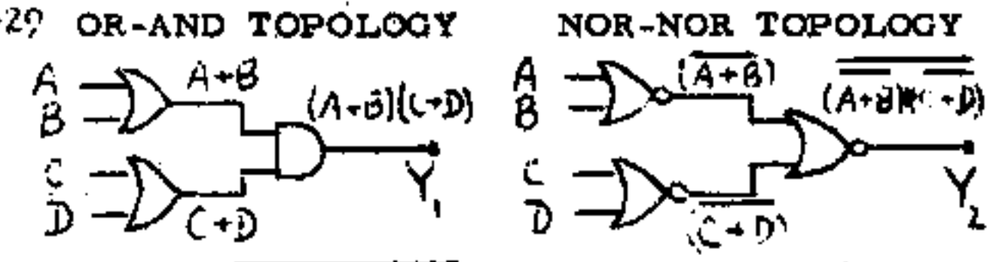

Now $Y_2 = \overline{\overline{(A+B)}+\overline{(C+D)}}$

$= \overline{\overline{(A+B)}}\,\overline{\overline{(C+D)}}$ By De Morgans Law

$= (A+B)(C+D)$

$= Y_1$

Hence the two topologies are identical.

5-30

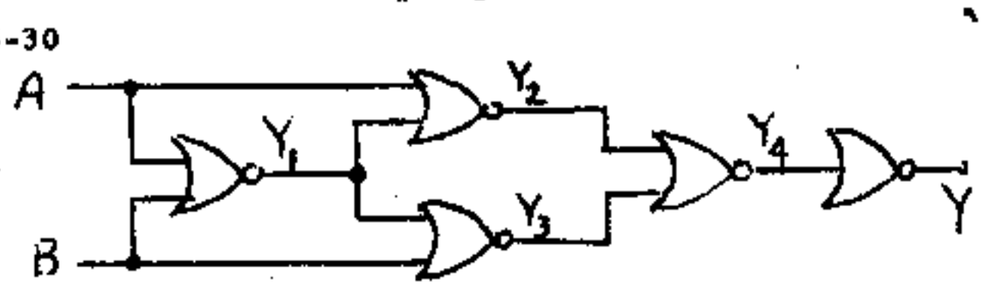

$Y_1 = \overline{A+B}$

$Y_2 = \overline{A+\overline{A+B}} = \overline{A}(A+B) = \overline{A}B$

$Y_3 = \overline{B+\overline{A+B}} = \overline{B}(A+B) = A\overline{B}$

$Y_4 = \overline{\overline{A}B+A\overline{B}}$

$Y = \overline{\overline{\overline{A}B+A\overline{B}}} = \overline{A}B + A\overline{B}$

which is the exclusive OR function.

5-31 a) OR operation $Y = A+B = \overline{\overline{A+B}}$ (Fig 1)

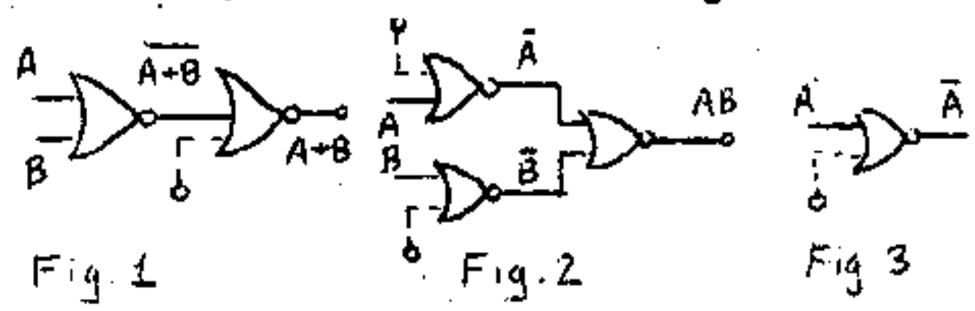

AND operation $Y = AB = \overline{\overline{A}+\overline{B}}$ (Fig. 2)

NOT operation $Y = \overline{A} = \overline{A+0} = \overline{A}$ (Fig. 3)

b) OR operation $Y = A+B = \overline{\overline{A}\,\overline{B}}$ (Fig. 4)

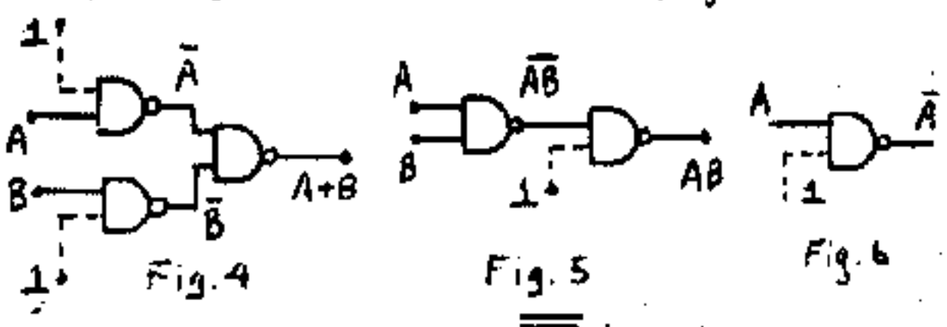

AND operation $Y = AB = \overline{\overline{AB}}$ (Fig. 5)

NOT operation $Y = \overline{A} = \overline{A1} = \overline{A}$ (Fig. 6)

5-32

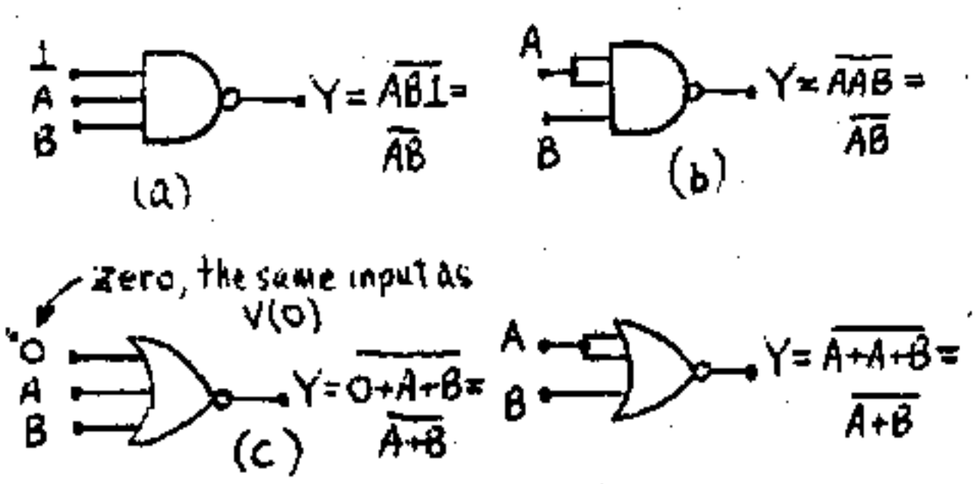

In (b) the signal A is loaded by two input gate circuits, whereas in (a) it is loaded by only one input gate.

5-33 <u>Method 1:</u>

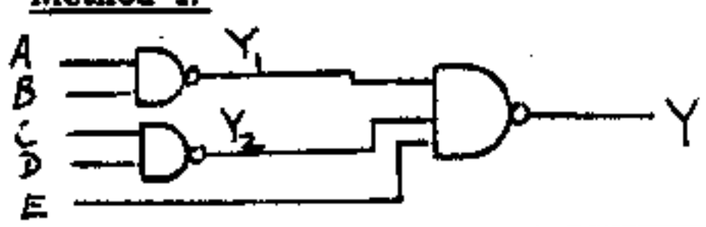

$Y_1 = \overline{AB}$, $Y_2 = \overline{CD}$, $Y = \overline{Y_1 Y_2 E} = \overline{(\overline{AB})(\overline{CD})E}$

$= AB + CD + \overline{E}$ by De Morgan's Law

<u>Method 2:</u>

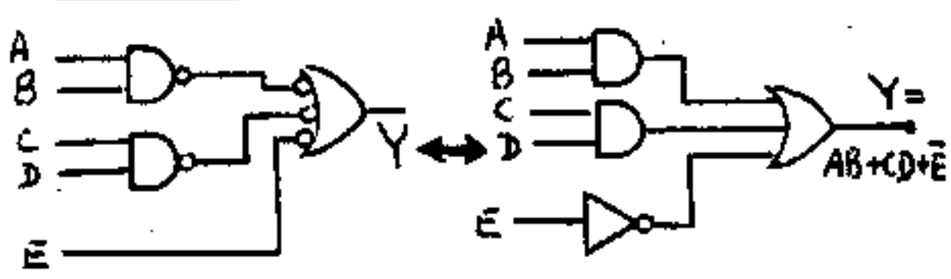

5-34

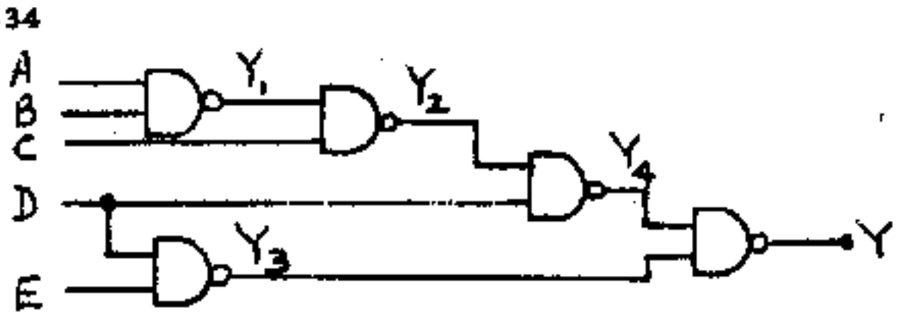

$Y_1 = \overline{AB}$

$Y_2 = \overline{\overline{AB}\,C}$

$Y_3 = \overline{DE}$

$Y_4 = \overline{Y_2 D} = \overline{(\overline{\overline{AB}C})D}$

$Y = \overline{Y_4 Y_3} = \overline{(\overline{(\overline{\overline{AB}}C)D})\overline{DE}} = \overline{\overline{AB}C}\,D + DE = (AB+\overline{C})D + DE$

$= D(AB+\overline{C}+E)$

5-35 a)

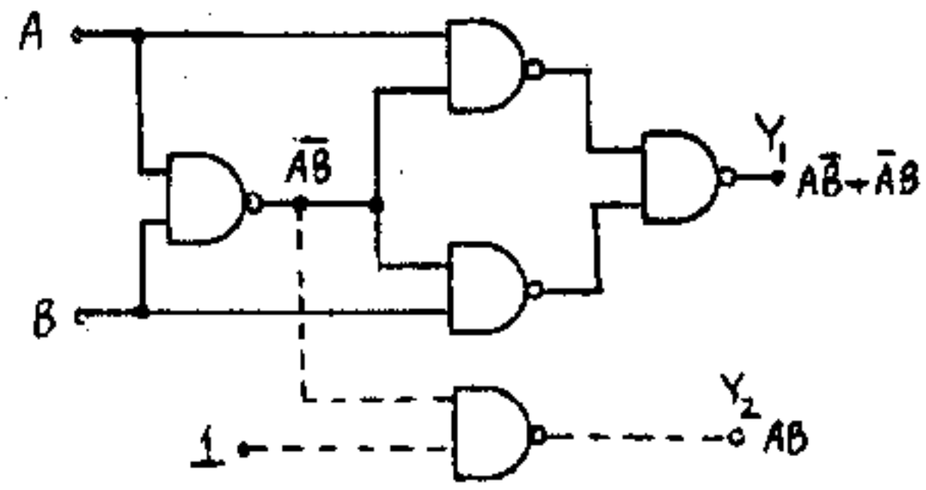

to implement the exclusive OR

$Y_1 = \overline{A}B + A\overline{B} = \overline{(\overline{\overline{A}B})(\overline{A\overline{B}})}$

and $\overline{\overline{A}B} = \overline{(\overline{AB})B}$ A and $\overline{A\overline{B}} = \overline{(\overline{AB})A}$

b) If $\overline{AB}$ is inverted then $Y_2 = AB$, hence Y_1 and Y_2 are the two outputs of the half-adder.

5-36 a) Since the input is from similar gates, $V(0) = V_{CE,\,sat} = 0.5$ V.

If any or all inputs are at V(0), then assume all low input diodes conduct, and all other diodes are OFF

$\therefore\ V_P = 0.5 + 0.7 = 1.2$ V

If V(1) is greater than $1.2 - V_\gamma = 0.6$ V then the other input diodes will be reverse biased and be OFF. V_γ for D1 = 0.7 + 0.7 = 1.4 and the minimum voltage required at P is 1.4 + 0.5 = 1.9 to get D1 and Q to be ON. Hence since $V_P = 1.2$ both, D1 and Q are OFF. The output voltage rises towards +12 V, but when it reaches V'+0.7 V, D conducts and the output is clamped to V'+0.7 V or V(1) = V'+0.7 V.

At coincidence, assume all input diodes are OFF, D1 is ON and the transistor is in saturation.

$\therefore\ V_P = 1.4 + V_{BE,\,sat} = 1.4 + 1 = 2.4$ V

If the input diodes are to remain OFF, V(1) must be greater than 2.4 - 0.6 = 1.8 V

$\therefore\ V' \geq 1.8 - 0.7 = 1.1$ V

$\therefore\ \underline{V'_{min} = 1.1\ \text{V}}$

Now $I_{R1} = \frac{12-2.4}{15} = 0.640$ mA, $I_{R2} = \frac{1+12}{100} = 0.130$ mA

$I_B = I_{R1} - I_{R2} = 0.640 - 0.130 = 0.510$ mA

$I_C = \frac{12 - V_{CE,\,sat}}{2.2} = \frac{12-0.5}{2.2} = 5.227$ mA, to be in saturation $h_{FE} \geq \frac{I_C}{I_B}$

$h_{FE} \geq \frac{5.227}{0.510} = 10.25$, hence $\underline{(h_{FE})_{min} = 10.25}$ and $v_o = 0.5$ V

Hence the circuit operates as a positive NAND gate.

b) i) When at least one input is low, $V_P = 1.2$ V; if D1 is a single diode then only 0.7+0.5 V is required and since $V_P = 1.2$ V both D and the transistor will be ON, resulting in malfunctioning of the circuit.

ii) At coincidence, V_P will now equal $= 0.7 + 0.7 + 0.7 + 1 = 3.1$ V, hence to have the input diodes cutoff, $V(1) \geq 3.1 - 0.7 = 2.4$ V and hence V^1 must be greater than $2.4 - 0.7 = 1.7$ V. If this is satisfied then the circuit will operate properly.

c) For ideal diodes there is no limit on Fan-in. In practice diode leakage and capacitance place a a limit on Fan-in.

5-37 a) At coincidence $v_A = v_B = V(1) = 5$ V and we assume that the input diodes are OFF, the other diodes ON, and the transistor is in saturation.

$\therefore V_P = V_{BE,sat} + 0.7 + 0.7 = 0.8 + 0.7 + 0.7 = 2.2$ V

Hence the input diodes are reverse biased by $5 - 2.2 = 2.8$ V and are indeed OFF.

Current through 10 kΩ $= I_1 = \frac{10 - V_P}{10} = \frac{10 - 2.8}{10} = 0.720$ mA

Current through 5 kΩ $= I_2 = \frac{V_{BE,sat}}{5} = \frac{0.8}{5} = 0.160$ mA

$I_B = I_1 - I_2 = 0.720 - 0.160 = 0.56$ mA.

Now since Q is assumed to be in saturation $v_o = V_{CE,sat} = 0.2$ V and $I_C = \frac{5 - 0.2}{2} = 2.40$ mA

For the transistor to be in saturation $I_B h_{FE} \geq I_C$

OR $I_{B(h_{FE})_{min}} = I_C$ or $(h_{FE})_{min} = \frac{2.4}{0.56} = \underline{4.286}$

When at least one input is low, those diodes with low inputs conduct.

$\therefore V_P = 0.7 + V(0) = 0.7 + 0.2 = 0.9$ V. This voltage is not sufficient to drive the two diodes and the transistor ON, hence Q is cutoff and $V_O = V(1) = 5$ V. This confirms the operation of the circuit as a NAND gate.

b) When the transistor is OFF

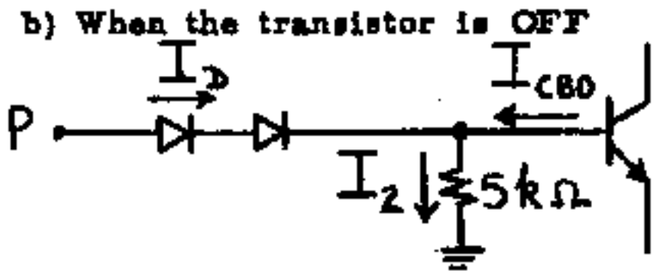

$\therefore I_{CBO} = I_2 - I_D$. To have the transistor at cutoff $V_{BE} \leq 0.4$ V or $I_{2,max} = \frac{0.4}{5\ k\Omega} = 0.080$ mA. Since $V_P = 0.9$ V and $V_{BE} \leq 0.4$ V then across each diode we have $V_D \geq \frac{0.5}{2} = 0.25$ V.

Now $I_D \geq I_{CBO}(e^{V_D/2V_T} - 1) = I_{CBO}(e^{0.25/2 \times 0.026} - 1)$

$= 121.45\ I_{CBO}$

$\therefore I_{CBO,max} = I_{2,max} - I_{D,min} = 0.080 - 121.45\ I_{CBO,max}$

or $I_{CBO,max} = \frac{0.080}{122.45} = \underline{0.653\ \mu A}$

c) At coincidence $V_P = 2.2$ V, hence for the gate to operate properly the input diodes must be OFF

$\therefore V(1) + V_N \geq V_P - 0.6$

$\therefore V_N \geq 2.2 - 0.6 - 3$

$\therefore$ $\underline{NM(0) = -1.4\ V}$

When any input is low, $V_P = 0.9$ V, we need $V_P = 0.7 + 0.7 + 0.5 = 1.9$ V to have the diodes and the transistor ON. $\therefore$ Noise margin $= 1.9 - 0.9 = 1.0$ V.

$\therefore$ $\underline{NM(1) = +1.0\ V}$

5-38 a) If at least one input is low then only the input diodes connected to the low input are ON. $V_P = 0.2 + 0.7 = 0.9$ V, which is not sufficient to drive D_1, D_2 and Q ON. So Q is OFF and the output is $V(1) = 3$ V. If all inputs are high, then all input diodes are OFF, D_1 & D_2 are ON and Q is in saturation. Hence the output is $0.2\ V = V(0)$.

$\therefore V_P = 0.8 + 0.7 + 0.7 = 2.2$ V.

Current through 3.3 kΩ $= I_1 = \frac{5.2 - 2.2}{3.3} = 0.909$ mA

current through 15 kΩ $= I_2 = \frac{0.8 + 3}{15} = 0.253$ mA

$I_B = I_1 - I_2 = 0.909 - 0.253 = 0.656$ mA.

In the absence of fan-out $I_C = \frac{3 - 0.2}{1.1} = 2.545$ mA

$\therefore$ to be in saturation $h_{FE} \geq \frac{I_C}{I_B} = \frac{2.545}{0.656} = (h_{FE})_{min}$

$= 3.880$

If $h_{FE} > (h_{FE})_{min}$ the transistor is in saturation. Since $V(1) = 3$ V then the input diodes are reverse biased by $3 - 2.2 = 0.8$ V and are OFF. Hence the circuit operates as a positive NAND gate.

b) When there is a low input, that diode is ON, and the maximum current through it is $= \frac{5.2 - V_P}{3.3}$

$= \frac{5.2 - 0.7 - 0.2}{3.3} = 1.303$ mA hence the fan-out current is 1.303 mA, and for a fan-out of N, the total collector current is:

$I_C = 2.545 + 1.303\ N$,

for the transistor to be in saturation,

$I_B h_{FE} > 2.545 + 1.303\ N$

$\therefore$ $0.656 \times 25 > 2.545 + 1.303\ N$

or $N \leq \frac{0.656 \times 25 - 2.545}{1.303} = 10.633$

$\therefore$ $\underline{\text{Maximum fan-out} = 10}$

c) At coincidence, from part (a) $V_P = 2.2$ V.
If the input falls to $2.2 - 0.6 = 1.6$ V then the diodes will conduct and the gate will malfunction.

$$V(1) + NM(0) = 1.6 \text{ V}$$

$$3 + NM(0) = 1.6 \text{ V}$$

OR $\underline{NM(0) = -1.4 \text{ V}}$.

When any or all inputs are low, $V_P = 0.9$ V.
For proper operation D_1, D_2 and Q must remain OFF. We need $V_P = 0.6 + 0.6 + 0.5 = 1.7$ before D_1, D_2 and Q come ON. Hence a spike of $1.7 - 0.9 = 0.8$ V will make the circuit malfunction.

$$NM(1) = +0.8 \text{ V}$$

d) If fan-out = 0 then $V(1) = 3$ V.
For a fan-out of 10 (which is the maximum) the total reverse saturation current being drawn from the collector circuit is $= 1 \times 10^{-3} \times 10 = 1 \times 10^{-2}$ mA

$$V_o = 3 - 10^{-2} \times 1.1 = 3 - 0.011 = \underline{2.989 \text{ V}} = V(1)$$

c) $I_C = 2.545 + 1.303 \times 10$ for N=10 from part (b)
or $(I_C)_{min} = 15.58$ mA.

5-39 a) When one input is low, the corresponding input diode conducts and $V_P = V(0) + V_{ON}(\text{diode}) = 0.2 + 0.7 = 0.9$ V and D1, D2. . . DN as well as the transistor are OFF. Assume $V_P = 0.9 + V_n$, where V_n is a superimposed noise voltage. For the circuit to operate properly it is required that D1, D2. . DN and the transistor remain OFF;

Hence $0.9 + V_N \le 0.6N + V_{BE,\,OFF} = 0.6N + 0.4$

but $V_{N(max)} = 1.5$ V

Hence $N \ge \frac{2.0}{0.6} = 3.33$, and we need at least 4 diodes for the circuit to operate properly at $v_o = V(0)$.
At coincidence, the input diodes must be OFF and Q is in saturation. The noise voltage which now causes the circuit to malfunction is now negative or $V_N = -1.5$ V max.

Hence $V_N + V(1) \ge V_P - 0.6 = NV_D + V_{BE,\,sat} - 0.6$

The maximum values of V_D and $V_{BE,\,sat}$ occur at the lowest temperature (-50°C), and since they decrease by 2.5 mV/°C with an increase in temperature, we have

$$V_D = 0.7 + 2.5 \times 10^{-3}(25+50) = 0.888$$

$$V_{BE,\,sat} = 0.8 + 2.5 \times 10^{-3}(25+50) = 0.988$$

and the worst case value of $V(1) = V_{CC} - 0.5 = 9.5$ V

Hence $-1.5 + 9.5 \ge 0.888N + 0.988 - 0.6$

or

$$N \le \frac{8.00 - 0.388}{0.888} = 8.57$$

Hence no more than 8 diodes can be used for the circuit to operate properly at $v_o = V(1)$.
b) At 160°C, since I_{CBO} doubles for every 10°C increase in temperature, $I_{CBO} = 0.5 \times 2^{13.5}$ $= 1.16 \times 10^4 \times 0.5$ nA $= 5.79$ μA When at least one input is low, the transistor and the diodes D1, D2, D3, D4 will be OFF and for the limiting case for which $V_{BE} = 0.4$ V, as shown below, $I_{R2} = I_D + I_{CBO}$

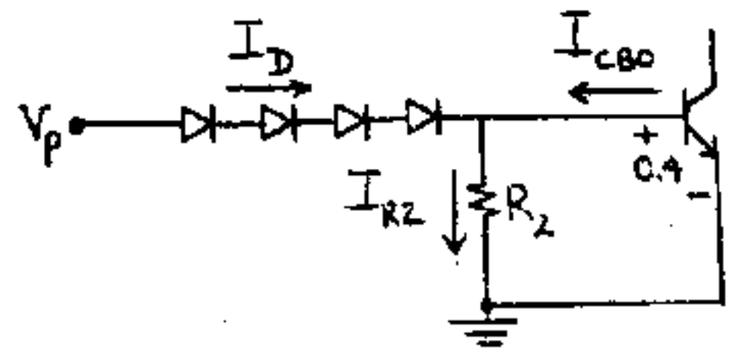

But $I_D + I_o(e^{V_D/\eta V_T} - 1) = I_{CBO}(e^{V_D/\eta V_T} - 1)$ and

$$V_D = \frac{V_P - 0.4}{4} = \frac{0.5}{4} = 0.125 \text{ μA}$$

also $\eta = 2$ for silicon transistors; then

$$I_{R2} = I_{CBO} \exp\left[\frac{0.125}{0.052}\right] = 5.79\, e^{2.4} \text{ μA}$$

$= 11.02 \times 5.79$ μA or $I_{R2} = 63.81$ μA.

We require at this temperature that $I_{R2} \times R_2 \le V_{BE}$ or

$$R_2 \le \frac{V_{BE}}{I_{R2}} = \frac{0.4}{0.06381} \times 10^3\,\Omega = 6.27 \text{ k}\Omega.$$

Hence $\underline{R_2\ max = 6.27 \text{ k}\Omega}$

c) The maximum value of I_C is 50 mA

$$I_{C,\,max} = \frac{V_{CC,\,max} - V_{CE,\,sat}}{R_C} + 10\left[\frac{V_{CC,\,max} - V_{D,\,min} - V_{CE,\,sat}}{R_1}\right]$$

$V_{CE,\,sat}$ is almost independent of T and equals 0.2 V. $V_{D,\,min}$ occurs at the highest temperature 160°C; $V_{D,\,min} = 0.7 - 2.5 \times 10^{-3}(160-25) = 0.7 - 0.338$ $= 0.362$ V

$$\frac{10.5 - 0.2}{5} + 10\,\frac{[10.5 - 0.362 - 0.2]}{R_1} = 2.06 + \frac{99.38}{R_1} = 50$$

and $R_1 = \frac{99.38}{47.94} = 2.07 \text{ k}\Omega = R_{1(min)}$

This is the minimum vlaue of R_1 because if R_1 is smaller then the value of I_C would exceed 50 mA. At saturation $h_{FE} I_B \ge I_C$. The worst case is at -50°C when $h_{FE} = 50$ = minimum value. In the above equation we must now use V_D at -50°C; and $V_D = 0.888$ V at this temperature from part (a)

$$\therefore\ I_C = \frac{10.3}{R_C} + 10\frac{[10.5-0.888-0.2]}{R_1} = 2.06 + \frac{94.12}{R_1}$$

The minimum value of I_B is given by

$$I_B = \frac{V_{CC(min)} - 4V_D - V_{BE(sat)}}{R_1} - \frac{V_{BE(sat)}}{R_2}$$

$V_{BE,\,sat} = 0.988$ V at -50°C from part (a)

$$\therefore\ I_B = \frac{9.5-(4)(0.888)-0.988}{R_1} - \frac{0.988}{5} = \frac{4.96}{R_1} - 0.198$$

since $h_{FE}I_B \geq I_C$

$$50\left(\frac{4.96}{R_1} - 0.198\right) \geq 2.06 + \frac{94.12}{R_1}$$

or $\dfrac{248.0 - 94.12}{R_1} \geq 2.06 + 9.90$ or $R_1 \leq \dfrac{153.88}{11.96} = 12.87$ kΩ

Hence $R_{1(max)} = 12.87$ kΩ

5-40. a) At coincidence $V_P = nV_D + V_{BE,\,sat}$ and the current in R_1 is $\dfrac{V_{CC}-V_P}{R_1}$. To drive the transistor into saturation this current must be positive and hence $V_{CC} > V_P$

$$nV_D + V_{BE,\,sat} < V_{CC} \quad \text{or} \quad n_{max} = \frac{V_{CC}-V_{BE,\,sat}}{V_D}$$

b) At coincidence, the transistor will be in saturation.

Then $I_1 = \dfrac{V_{CC}-nV_D-V_{BE,\,sat}}{R_1}$

$$I_2 = \frac{V_{BE,\,sat}}{R_2}$$

$$I_B = \frac{V_{CC}-nV_D-V_{BE,\,sat}}{R_1} - \frac{V_{BE,\,sat}}{R_2}$$

$$I_C = \frac{V_{CC}-V_{CE,\,sat}}{R_C} + N\,\frac{V_{CC}-V_D-V_{CE,\,sat}}{R_1}$$

to be in saturation $I_C \leq h_{FE}I_B$ or

$$\frac{V_{CC}-V_{CE,\,sat}}{R_C} + N\,\frac{V_{CC}-V_D-V_{CE,\,sat}}{R_1} \leq h_{FE}\frac{V_{CC}-nV_D-V_{BE,\,sat}}{R_1} - h_{FE}\frac{V_{BE,\,sat}}{R_2}$$

then
$$N \leq h_{FE}\frac{V_{CC}-nV_D-V_{BE,\,sat}}{V_{CC}-V_D-V_{CE,\,sat}} - \frac{R_1}{R_2}\frac{V_{BE,\,sat}}{V_{CC}-V_D-V_{CE,\,sat}}h_{FE} - \frac{R_1}{R_C}\frac{V_{CC}-V_{CE,\,sat}}{V_{CC}-V_D-V_{CE,\,sat}}$$

but $V_{BE,\,sat} \approx V_D$ and $V_{CE,\,sat} \ll V_{CC}-V_P$, hence neglecting $V_{CE,\,sat}$ gives

$$N \leq h_{FE}\frac{\left[1-(n+1)\frac{V_D}{V_{CC}}\right]}{1-\frac{V_D}{V_{CC}}} - \frac{R_1}{R_2}h_{FE}\frac{V_D/V_{CC}}{1-\frac{V_D}{V_{CC}}} - \frac{R_1}{R_C}\frac{1}{1-\frac{V_D}{V_{CC}}}$$

$$\text{or}\quad N_{max}\left(1-\frac{V_D}{V_{CC}}\right) = h_{FE} - \frac{R_1}{R_C} - \left[(n-1)+\frac{R_1}{R_2}\right]\frac{V_D}{V_{CC}}h_{FE}$$

5-41 a) At coincidence, Q1 and Q2 are in saturation and D1 is ON. Hence $V_P = V_{D1(on)} + V_{BE1(sat)} + V_{BE2(sat)}$

$$= 0.7 + 0.8 + 0.8 = 2.3 \text{ V}$$

$$I_{B1} = \frac{V_{CC}-V_P}{4} = \frac{5-2.3}{4} = 0.675 \text{ mA}$$

$V_{C1N} = V_{CE1(sat)} + V_{BE2(sat)} = 0.2 + 0.8 = 1$ V, hence

$I_{C1} = \dfrac{5-1}{2} = 2$ mA and $-I_{E1} = I_{B1} + I_{C1} = 0.675 + 2$

$= 2.675$ mA

$I_{1k\Omega} = \dfrac{V_{BE2(sat)}}{1} = 0.8$ mA, hence

$I_{B2} = -I_{E1} - I_{1k\Omega} = 2.675 - 0.8 = 1.875$ mA

Q1 is in saturation since $(0.675)(25) > 2$

Now $I_{C2} = \dfrac{V_{CC}-V_{CE2(sat)}}{4} = \dfrac{5-0.2}{4} = 1.2$ mA.

When any input is low, the corresponding input diode conducts and hence $V_P = V(0) + V_{D(on)}$

$$= 0.2 + 0.7 = 0.9 \text{ V}$$

Standard load $= \dfrac{V_{CC}-V_P}{4} = \dfrac{5-0.9}{4} = 1.025$ mA

Hence total $I'_{C2} = I_{C2} + 1.025\,N = 1.2 + 1.025\,N$

to have Q2 in saturation, $(I_{B2})(h_{FE}) > I_{C2}$

$\therefore\ (1.875)(25) > 1.2 + 1.025\,N$ or

$$N \leq \frac{46.875 - 1.2}{1.025} = 44.561$$

Thus <u>fanout = 44</u>

b) When any input is low $V_P = 0.9$ V as in part a) and Q1, Q2 and D1 are OFF. Hence for proper operation $V_P < V_{D1(cutin)} + V_{BE1(cutin)} + V_{BE2(cutin)}$

$= 0.6 + 0.5 + 0.5 = 1.6$ V. Since $V_P = V(0) + 0.7 + V_N$,

$V_N = 1.6 - 0.9 = 0.7$ or <u>NM(1)=+0.7 V</u>

At coincidence $V_P = 2.3$ V. To keep the input diodes reverse biased.

$V(1) + V_N > V_P - 0.6$ V or $V_N > 1.7 - 5 = -3.3$ V

or $\underline{NM(0) = -3.3 \text{ V}}$

c) At coincidence current supplied by the battery is

$I_o = I_{B1} + I_{C1} + I_{C2}$ (for 0 fan-out)

$= 0.675 + 2 + 1.2 = 3.875$ mA.

When any input is low, the current supplied by the battery is

I_1 = "standard load" current (since Q1 and Q2 are OFF)

$= 1.025$

$$\therefore P_{av} = \frac{V_{CC}(I_0 + I_1)}{2} = \frac{5 \times (3.875 + 1.025)}{2} = \underline{12.25 \text{ W}}$$

5-42 a) At coincidence, we assume input diodes are OFF, Q_1 is active and Q_2 is in saturation. Also D_2 is ON. Hence

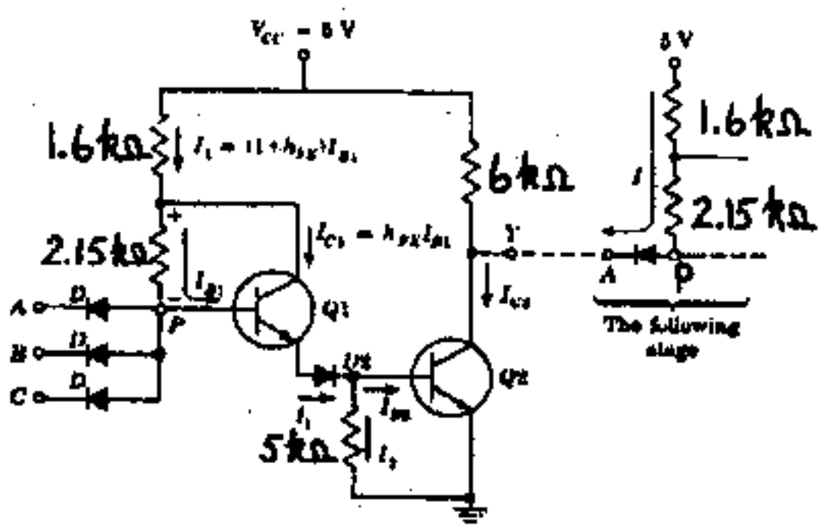

$V_P = 0.7 + 0.7 + 0.8 = 2.2$ V

Since the current through 1.6 kΩ $= I_{B1} + I_{C1}$ and through 2.15 kΩ $= I_{B1}$

$V_{CC} - V_P = 5 - 2.2 = 1.6(1 + h_{FE})I_{B_1} + 2.15\, I_{B1}$

or $I_{B1} = \dfrac{2.8}{3.75 + 1.6\, h_{FE}}$

$$\therefore I_{E_1} = (1 + h_{FE})I_B = \frac{2.8(1 + h_{FE})}{3.75 + 1.6 h_{FE}} = I_1$$

The current through 5 kΩ $= I_2 = \dfrac{0.8}{5} = 0.16$ mA

$$\therefore I_{B2} = I_1 - I_2 = \frac{2.8(1 + h_{FE})}{3.75 + 1.6 h_{FE}} - 0.16 \text{ mA}$$

Now $I' = \dfrac{5 - 0.2}{6} = 0.8$ mA and the standard load

$= \dfrac{5 - 0.7 - 0.2}{1.6 + 2.15} = 1.093$ mA $= I$ total $I_{C2} = I' + I = 0.8 + 1.093\,N$

where N=Fanout; for Q_2 to be in saturation

$h_{FE} I_{B2} \geq I_{C2}$

$$\frac{2.8(1 + h_{FE})h_{FE}}{3.75 + 1.6 h_{FE}} - 0.16\, h_{FE} \geq 0.8 + (1.093)(20)$$

$$2.8\, h_{FE} + 2.8\, h_{FE}^2 - 0.16 \times 3.75\, h_{FE} - 0.16 \times 1.6\, h_{FE}^2$$

$$\geq 0.8 + 21.86(3.75 + 1.6\, h_{FE})$$

or $h_{FE}^2 - 13.38\, h_{FE} - 33.402 \geq 0$

$$h_{FE} \geq \frac{13.387 \pm \sqrt{13.387^2 + 4 \times 33.402}}{2}$$

Taking only the + root $h_{FE} \geq 15.537$

$\therefore \underline{(h_{FE})_{min} = 15.54}$

b) At coincidence $V_p = 2.2$ V and since $V(1) = 5$ V then to keep the input diodes reverse biased

$V(1) + V_N \geq V_P - 0.6$, $V_N \geq -5 + 2.2 - 0.6 = \underline{-3.4 \text{ V}}$

$\therefore \underline{NM(0) = -3.4 \text{ V}}$

When any input is low, $V_P = 0.7 + 0.2 = 0.9$ V. If V_P is greater than $0.5 + 0.5 + 0.6 = 1.6$ V, then the transistors will come ON, and the circuit will malfunction.

$\underline{NM(1) = 1.6 - 0.9 = 0.7 \text{ V}}$

c) With any low input, $V_P = 0.9$ V and Q_1, Q_2 are OFF, hence the only current drawn from the power supply $= \dfrac{5 - 0.9}{3.75} = 1.093$ mA

$P_L = 5 \times 1.093 = \underline{5.465 \text{ W}}$

At coincidence I' with no load = 0.8 mA (from part a); current through 1.6 kΩ $= I_1$

$$= \frac{2.8(1 + h_{FE})}{3.75 + 1.6\, h_{FE}} = \frac{2.8 \times 21}{3.75 + 32} = 1.645 \text{ mA}$$

$\therefore P_H = (0.8 + 1.645) \times 5 = \underline{12.224 \text{ W}}$

d) Since I_o doubles every 10°C then

$$I_o(175°) = I_o(25)\, 2^{\frac{175 - 25}{10}} = 10^{-9} \times 2^{15} = 3.277 \times 10^{-5}$$

For N=20 the total current through the 5 kΩ resistor when Q2 is OFF is $20 \times 3.277 \times 10^{-5}$ $= 6.554 \times 10^{-4}$ A $= 0.6554$ mA

Hence $V(1) = 5 - (0.655)(6) = 1.068$ V.

5-43 a) With one input low: input diodes associated with the low input will be ON, and $V_P = 0.2 + 0.7 = 0.9$ V. In order to bring the transistors to just cutin, V_P should be $0.5 \times 3 = 1.5$ V. Hence the transistors are OFF and $V_o = V(1) = 5$ V.

At coincidence all diodes are OFF, Q_1 is active and Q_2, Q_3 are in saturation. Vp is clamped to $0.7 + 2 \times 0.8 = 2.3$ V and since $V(1) = 5$ V the input diodes are reversed biased by 5-2.3=2.7V and are OFF. The output is $V_{CE,sat} = 0.2$ V $= V(0)$, hence the NAND operation has been verified.

b) For Q1: Current flowing through 1.75 kΩ $= I_{C1} + I_{B1} = I_{B1}(h_{FE} + 1) = 31\, I_{B1}$

The current flowing through $2k\Omega = I_{B1}$

$$\frac{5-I_{B1}(h_{FE}+1)1.75-2.3}{2} = I_{B1}$$

or $2.7 = 54.25\, I_{B1} + 2I_{B1}$

or $I_{B1} = \frac{2.7}{56.25} = 0.048$ mA

and $I_{E1} = (1+h_{FE})I_{B1} = 31 \times 0.048 = 1.488$ mA

for Q2: $V_{B2} = 0.8 + 0.8 = 1.6$ V

$$I_{5K} = \frac{1.6}{5} = 0.32 \text{ mA}$$

$I_{B2} = I_{E1} - I_{5K} = 1.488 - 0.32 = 1.168$ mA.

$$I_{C2} = \frac{V_{CC} - V_{CE2,\,sat} - V_{BE3,\,sat}}{1.5} = \frac{5-0.2-0.8}{1.5}$$

$= 2.667$ mA

$\therefore$ $h_{FE}I_{B2} = 30 \times 1.168 = 35.04$ is greater than I_{C2} and hence Q_2 is indeed in saturation.

For Q3: current through $1k\Omega = \frac{0.8}{1} = 0.8$ mA $= I_{1K}$.

$-I_{E2} = I_{C2} + I_{B2} = 2.667 + 1.168 = 3.835$ mA

$I_{B3} = -I_{E2} - I_{1K} = 3.835 - 0.8 = 3.035$ mA.

$$I_{C3} = \frac{5-0.2}{2.2} = 2.182 \text{ mA}$$

$\therefore$ $h_{FE}I_{B3} = 30 \times 3.035 = 91.05 > I_{C3}$ and hence Q_3 is also in saturation and $V_o = 0.2$ V

hence the circuit functions as a posit. NAND gate for zero fan out.

Now consider a fan out N:

$$\text{Standard load} = \frac{V_{CC} - V_D - V_{CE,\,sat}}{2 + 1.75} = \frac{5-0.9}{3.75}$$

$= 1.093$ mA

$I_{C_3} = 2.182 + N \times 1.093$ mA

For the transistor to be in saturation

$$h_{FE}I_{B_3} > I_C$$

or $30 \times 3.035 > 2.182 + 1.093\, N$

or $N < \frac{91.05 - 2.182}{1.093} = 81.306$

or $\underline{N_{max} = 81}$

5-44 a) Assume that Q2 is in saturation; hence $V_{BE2} = 0.8$ V and $V_{CE2} = 0.2$ V, hence across the diode there exists a voltage drop greater than 0.4 V and consequently the diode conducts and $V_{BC} = 0.4 < 0.5$ hence the base-collector junction is actually reverse biased and Q_2 cannot be in saturation as we assumed. It follows that the Shottky diode prevents the transistor from entering the saturation region. When Q2 is ON, it must be in the active region. Assuming $V_{BE2} = 0.7$ V then $V_{CE2} = V_{CB2} + V_{BE2} = -0.4 + 0.7 = 0.3$ V $= V(0)$.

b) When at least one input is low, the corresponding input diodes will be ON and $V_P = 0.7 + V(0)$ $= 0.7 + 0.3 = 1.0$ V. The minimum required value of V_P to just bring the transistors to cut-in $= 0.6 + 0.5 + 0.5 = 1.6$ V hence the noise margin $NM(0) = \underline{+0.6\text{ V}}$. Then Q1, D2, and Q2 will be OFF and $V_o = V(1) = 5$ V. At coincidence $V_P = 0.7 + 0.7 + 0.7 = 2.1$ V since Q1 and Q2 are in active and D2 is ON, then $V_o = V(0) = 0.3$ V. To keep the diodes OFF V(1) must be greater than $2.1 - 0.6 = 1.5$ V, hence the noise margin is $V(1) + V_N = 1.5$ or $V_N = NM(1) = 1.5 - 5 = \underline{-3.5\text{ V}}$

c) At coincidence, from the illustrative example in connection with Fig. 5-19, we found that $I_1 = 1.543$ mA.

$I_2 = \frac{0.7}{5} = 0.14$ mA, and if I_D is the current through the Schottky diode, then

$I_1 = I_{B2} + I_D + 0.14$ mA

$I_{B2} = 1.543 - 0.14 - I_D = 1.403 - I_D$ mA

Now $V_{BE2} = 0.7$ V and $V_{BC2} = 0.4$ V and from (a).

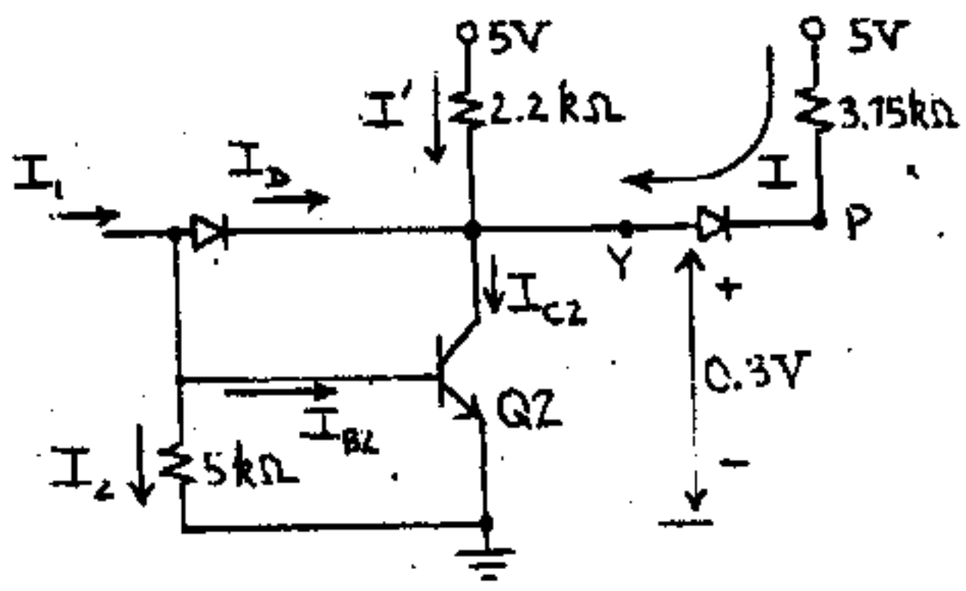

$V_o = V(0) = 0.3$ V

and $I' = I_{2.2\,k\Omega} = \frac{5-0.3}{2.2} = \frac{4.7}{2.2} = 2.136$ mA.

$I_{C2} = 2.136 + I_D$

Since Q_2 is in active $I_{B2}h_{FE} = I_{C2}$

$$(1.403 - I_D) \times 30 = 2.136 + I_D$$

$$42.09 - 30\, I_D = 2.136 + I_D$$

$I_D = \frac{39.954}{31} = \underline{1.289 \text{ mA.}}$

d) Each standard load current $= I = \frac{5-1}{3.75} = 1.067$ mA

$\therefore$ total collector current $= 2.136 + I_D + 1.067N = I_C$

since the transistor cannot saturate. $I_B h_{FE} = I_C$

when Q is active

$$42.09 - 30\, I_D = 2.136 + I_D + 1.067N.$$

Clearly since this relation is fixed, any increase in the collector current due to fan-out must be compensated by a decrease in I_D. Hence we get N_{max} when $I_D = 0$

$$N_{max} = \frac{42.09 - 2.136}{1.067} = 37.445$$

$\therefore$ $\underline{N_{max} = 37}$. We found in part (a) that $V(1) = \underline{5\text{ V}}$, $V(0) = \underline{0.3\text{ V}}$

5-45 $Y_1 = \overline{AB} = \bar{A} + \bar{B}$

$Y_2 = \overline{\bar{A}\bar{B}} = A + B$

but $Y = Y_1 Y_2$

$$\begin{aligned} Y &= (\bar{A} + \bar{B})(A + B) \\ &= \bar{A}A + \bar{A}B + \bar{B}A + \bar{B}B \\ &= 0 + \bar{A}B + \bar{B}A + 0 \\ &= \bar{A}B + A\bar{B} \\ &= \text{exclusive OR.} \end{aligned}$$

5-46 a) $V(0) = 0.2$ V and $V(1) = 15$ V. Let P be the base of Q1. If at least one input is low, the diode with the low input conducts, and $V_P = 0.2 + 0.7 = 0.9$ V. This is not enough to get Q1, D2 and Q2 ON, hence they are OFF, and $V_o = 15\text{ V} = V(1)$.

At coincidence all input diodes are OFF. Assume Q2 is in saturation and Q1 is in active region, and the Zener diode conducts

$\therefore$ $V_P = V_{BE1,\,act} + V_Z + V_{BE2,\,sat} = 0.7 + 6.9 + 0.8$

$= 8.4$ V, and $V_o = V_{CE,\,sat} = 0.2\text{ V} = V(0)$, and the circuit functions as a + NAND. The input diodes are reverse biased by $15 - 8.4 = 6.6$ and are indeed OFF; for Q1: Current through 3 kΩ

$$= I_{B1} + I_{C1} = I_{B1}(1 + h_{FE})$$

Current through 12 kΩ $= I_{B1}$

$\therefore$ $15 - 3I_{B1}(1 + h_{FE}) - 12 I_{B1} = 8.4$ V

$\therefore$ $3I_{B1}(5 + h_{FE}) = 6.6$ and $I_{B1} = \frac{6.6}{3(5 + h_{FE})}$

$\therefore$ current through D2 $= I_{E1} = (1 + h_{FE}) I_{B1}$

$$= \frac{6.6(1 + h_{FE})}{3(5 + h_{FE})}$$

current through 5 kΩ $= I_2 = \frac{0.8}{5} = 0.16$ mA

$$\therefore\ I_{B2} = I_{E1} - I_2 = \frac{6.6(1 + h_{FE})}{3(5 + h_{FE})} - 0.16$$

$$I_{C2} = \frac{15 - 0.2}{15} = \frac{14.8}{15} = 0.987 \text{ mA}$$

For the transistor to be in saturation $h_{FE} I_B \geq I_C$

$$\frac{h_{FE}\, 6.6(1 + h_{FE})}{3(5 + h_{FE})} - 0.16\, h_{FE} > 0.987$$

$$6.12\, h_{FE}^2 + 1.239\, h_{FE} - 14.8 \geq 0$$

$$\therefore\ h_{FE} \geq \frac{-1.239 \pm \sqrt{1.239^2 + 4 \times 14.8 \times 6.12}}{12.24}$$

$$= \frac{-1.239 \pm 19.075}{12.24}$$

taking only the positive root $h_{FE} \geq \frac{17.836}{12.24} = 1.457$

OR $\underline{h_{FE(min)} = 1.457}$

b) When at least one input is low, $V_P = 0.9$ V. To bring the transistor to cut-in we require $V_{P_1} = 0.5 + 6.9 + 0.5 = 7.9$ V. Hence a noise margin of $7.9 - 0.9 = 7.0$ V at the input will make the circuit malfunction

$\therefore$ $\underline{NM(1) = +7.0\text{ V}}$

At coincidence $V_P = 8.4$ V, and to keep the diodes reverse biased, we can tolerate a noise margin; $NM(0) + 15 \geq 8.4 - 0.6$ hence V(1) cannot fall by more than -7.2 V, OR $\underline{NM(0) = -7.2\text{ V}}$

c) The standard load is $= \frac{15 - 0.7 - 0.2}{15} = \frac{14.1}{15}$

$= 0.94$ mA.

Total $I_C = 0.987 + 0.94\,N$

for $h_{FE} = 40$, $I_{B2} = \frac{6.6(41)}{3(45)} - 0.16 = 1.844$ mA

$\therefore$ to be in saturation $I_B h_{FE} > I_C$

$$1.844 \times 40 \geq 0.987 + 0.94\,N$$

$$\text{OR}\quad N \leq \frac{73.778 - 0.987}{0.94}$$

$$N \leq 77.437$$

$\therefore$ $\underline{N_{max} = 77}$

d) At coincidence, the current supplied by the battery is $I = I_{E1} + I_{C2} + 0.94\,N$ from parts (a) and (c) $= \frac{6.6(1 + h_{FE})}{3(5 + h_{FE})} + 0.987 + 0.94\,N$

for $h_{FE} = 40$ and a fan out (N) of 10;

$$I = \frac{(6.6)(41)}{(3)(45)} + 0.987 + 9.4 = 12.39 \text{ mA}$$

Hence P(0) = power dissipated at coincidence

$= (12.39)(V_{CC}) = (12.39)(15) = \underline{185.85\text{ mW}}$

If at least one input is low, $V_P = 0.9$ V and Q1, D2 and Q2 are OFF.

Hence current through the series combination of the 3 kΩ and 12 kΩ resistors is

$I = (V_{CC} - V_P)/(3+12) = (15-0.9)/15 = 0.94$ mA.

Total current supplied by the battery is $I_1 = 0.94$ mA hence $P(1) = (0.94)(15) = \underline{14.10 \text{ mW}}$

Hence $P(av) = \frac{P(0)+P(1)}{2} = \frac{185.81+14.10}{2} = \underline{99.96 \text{ mW}}$

5-47 a) When Q2 is in saturation, it is sinking current and D3 will be ON. Since D3 is ON $V_{BE3} = -0.7$ V and Q3 is at cutoff and the active pull-up circuit has no effect on the gate operation besides increasing V(0) from 0.2 V to 0.2 + 0.7 = 0.9 V. Hence, there is also a decrease in the positive noise margin by 0.7 V.

When Q2 is at cut-off, the output rises towards 15 V; D3 will be OFF and the base current of Q3 through the 15 kΩ resistor saturates Q3. The output Y now sees an effective resistance of 1.5 kΩ plus $R_{CE,sat}$. Thus there is almost a tenfold improvement in rise time.

b) When Q2 is ON, the power loss will be 10 times greater when we use 1.5 kΩ.

5-48 a) If at least one input is low, V(0) = 0.2 V, then the argument in the text shows that $V_P = 0.2 + V_{CE1,sat} = 0.4$ V. Then Q2 and Q3 are OFF and the output is V(1) = 5 V.

If all inputs are at V(1) = 5 V then the emitter junction of Q1 is reverse biased and the collector junction is forward biased. This Q1 acts in the inverted mode with $h_{FE1} = 0.5$ and

$I' = -(1+h_{FE1})I_{B1} = -1.5\, I_{B1}$. Since $I_{B2} = -I'$ then $I_{B2} = 1.5\, I_{B1}$. Assume that this large base current saturates Q2 and Q3. Hence $V_P = 0.7+0.8+0.8 = 2.3$ V

and $I_{B1} = \frac{5-2.3}{4} = 0.675$ mA.

$I_{B2} = (1.5)(0.675) = 1.013$ mA

$I_{C2} = \frac{5 - V_{CE2,sat} - V_{BE3,sat}}{1.4} = \frac{5-0.2-0.8}{1.4} = 2.857$ mA

$-I_{E2} = I_{B2} + I_{C2} = 1.013 + 2.857 = 3.870$ mA and

$I_{R3} = 0.8/1 = 0.8$ mA

hence $I_{B3} = 3.870 - 0.8 = 3.070$ mA

and $I_{C3} = (5-0.2)/4 = 1.2$ mA.

$\therefore (h_{FE3})_{min} = \frac{I_{C3}}{I_{B3}} = \frac{1.2}{3.070} = 0.391$ in order to saturate Q3.

and $(h_{FE2})_{min} = \frac{I_{C2}}{I_{B2}} = \frac{2.857}{1.013} = 2.820$ in order to saturate Q2

If $(h_{FE})_{min} = \underline{2.820}$ then both Q2 and Q3 will be saturated and $v_o = V(0) = 0.2$ V

b) Assume that Q1 operates in the inverted mode as above, but Q2 is in the active region, while Q3 is in saturation.

Then $V_P = 0.7 + 0.7 + 0.8 = 2.2$ V,

$I_{B1} = \frac{5-2.2}{4} = 0.70$ mA and $I_{B2} = (1+h_{FE1})I_{B1} = 1.050$ mA

$I_{E2} = (1.050)(1+h_{FE})$ and $I_{B3} = 1.050 + 1.050\, h_{FE} - 0.8 = 0.250 + 1.050\, h_{FE}$

$I_{C3} = \frac{5-0.2}{4} = 1.20$ mA

for Q3 to be in saturation $h_{FE} I_{B3} \geq 1.20$

or $1.050\, h_{FE}^2 + 0.250\, h_{FE} - 1.20 \geq 0$

or $(h_{FE})_{min} = \frac{-0.25 \pm \sqrt{0.0625+5.04}}{2.1} = +0.957, -1.195$

hence $\underline{(h_{FE})_{min} = 0.957}$

$I_{C2} = h_{FE} I_{B2} = (h_{FE})(1.050)$ mA, and $V_{C2N} = 5 - 1.4\, I_{C2}$

or $V_{C2N} = 5 - (1.4)(1.050)(h_{FE}) = 5 - 1.47\, h_{FE}$

$V_{B2N} = 0.8 + 0.7 = 1.5$ V

$\therefore V_{CB2} = V_{C2N} - V_{B2N} = 5 - 1.47\, h_{FE} - 1.5 = 3.5 - 1.47\, h_{FE}$

to have Q2 active $V_{CB2} > 0$

$\therefore 3.5 - 1.47\, h_{FE} > 0$ or $h_{FE} < \frac{3.5}{1.47} = 2.381$

Hence $(h_{FE})_{max} = 2.381$ will saturate Q3 and let Q2 be in active, but from part (a) we know that if $h_{FE} > 2.820$ then both Q2 and Q3 saturate.

Hence $\underline{0.957 < h_{FE} < 2.381}$.

c) At coincidence $V_P = 2.3$ (with Q_2 in saturation) and if $V_I = 5 + V_N$ then to keep the base-emitter junction reverse biased, $V_P - V_I \leq 0.5$

$\therefore V_N \geq -3.4$ V and $\underline{NM(0) = -3.4 \text{ V}}$

With one input low, $V_P = 0.9$ V, and with noise $V_P = 0.9 + V_N$.

If $V_P \geq 0.6 + 0.5 + 0.5$ then the circuit will malfunction.

$0.9 + V_N \leq 1.6$

or $V_N \leq 0.7$ V

$\underline{NM(1) = +0.7 \text{ V}}$

d) Standard load current $= \frac{5-0.9}{4} = 1.025$ mA

$I_{C3} = 1.2 + 1.025N$

Q_2 is in saturation and from part a) $I_{B3} = 3.070$ mA (Note that since $h_{FE} > 2.82$ (part (a)) both Q2 and Q3 will be in saturation).

$3.070 \times 20 \geq 1.2 + 1.025N$ or

$N \leq \frac{61.4-1.2}{1.025} = 58.73$ or $\underline{N_{max} = 58}$

e) With at least one input low, $V_P = 0.9$ V and $I_{4k} = \frac{5-0.9}{4} = 1.025$ mA

$P_1 = 5 \times 1.025 = 5.125$ W

At coincidence, from part a)

$I_{B1} = 0.675$ mA

$I_{C2} = 2.857$ mA

$I_{C3} = 1.2$ mA

$P_2 = 5(0.675 + 2.857 + 1.2) = 23.66$ W

$P_{av} = \frac{5.125 + 23.66}{2} = \underline{14.393 \text{ W}}$

5-49 a) At coincidence $v_o = V(0) = 0.2$ V and Q1 is in the inverted mode, Q2, Q3 are saturated and Q4, DO are OFF. If the output is accidently shorted $v_o = 0$ V.

$V_{CN2} = V_{BE3,sat} + V_{CE2,sat} = 0.8 + 0.2$ V $= 1$ V.

This voltage is not sufficient to drive Q_4 and DO ON, and hence there is no change in the operation of the circuit; the short circuit current = 0 since Q4 and DO are OFF.

b) When any input is low, Q2 and Q3 turn OFF and Q4 and DO are ON and $v_o = V(1)$. If the output is shorted Q4 goes into saturation and

$$I_{B_4} = \frac{V_{CC} - V_{BE4,sat} - V_{D0,ON} - V_o}{1.4} = \frac{5-0.8-0.7-0}{1.4} = 2.5 \text{ mA}$$

and $$I_{C4} = \frac{V_{CC} - V_{CE4,sat} - V_{DO,ON} - V_o}{0.1} = \frac{5-0.2-0.7-0}{0.1} = 41 \text{ mA}$$

$\therefore$ I_{E4} = short circuit current $I_{B4} + I_{C4} = 2.5 + 41 = \underline{43.5 \text{ mA}}$

and since $(I_{B4})(h_{FE}) > I_{C4}$ Q4 is indeed in saturation.

5-50 (a) At coincidence all the inputs are at $v_i = V(1)$, then the emitter junction of Q1 is reverse biased and the collector junction is forward biased. Thus Q1 acts in the inverted mode with $h_{FEI} = 1$ and $-I_{E1} = -(1+h_{FEI})I_{B1} = -2I_{B1}$; $I_{B2} = -I_{E1} = 2I_{B1}$. If Q2, Q3 are saturated, then $V_{BN4} = V_{CE2(sat)} + V_{BE3(sat)} = 0.2 + 0.8 = 1$V. This voltage is insufficient to drive both Q4 and DO ON, hence they are both OFF. Denote by P the base of Q1. Then

$V_P = 0.7 + 0.8 + 0.8 = 2.3$ V and $I_{B1} = \frac{5-2.3}{5} = 0.540$ mA

$I_{B2} = (2)(0.540) = 1.08$ mA and

$I_{C2} = \frac{5 - V_{BN4}}{2} = \frac{5-1}{2} = 2$ mA since Q2 and Q3 are both in saturation.

$I_{R3} = \frac{0.8}{1} = 0.8$ mA and $I_{E2} = -I_{B2} - I_{C2} = -1.08 - 2 = -3.08$ mA.

$\therefore$ $I_{B3} = -I_{E2} - I_{R3} = 3.08 - 0.8 = 2.28$ mA.

Thus $(h_{FE2})_{min} = \frac{I_{C2}}{I_{B2}} = \frac{2}{1.08} = 1.852$

since Q4 and DO are OFF, $I_{C3} \approx 0$ and $(h_{FE3})_{min} = I_{C3}/I_{B3} = 0$;

$v_o = V(0) = 0.2$ V. Thus $h_{FE,min} = 1.852$

If any input now changes to $V(0) = 0.2$ V, Q2, Q3 turn OFF, the output remains momentarily at 0.2 V as explained in the text, and Q4 goes into saturation.

Thus $V_{BN4} = V_{BE4,sat} + V_{DO} + v_o = 0.8 + 0.7 + 0.2 = 1.7$ V

and $I_{B4} = \frac{V_{CC} - V_{BN4}}{2} = \frac{5-1.7}{2} = 1.65$ mA

$$I_{C4} = \frac{V_{CC} - V_{CE4,sat} - V_{DO} - v_o}{0.1} = \frac{5-0.2-0.7-0.2}{0.1} = 39.0 \text{ mA}$$

hence $(h_{FE4})_{min} = \frac{I_{C4}}{I_{B4}} = \frac{39.0}{1.65} = 23.64$.

Hence for the circuit to operate as desired, with Q2 and Q3 in saturation $(h_{FE4})_{min} = \underline{23.64}$

As explained in the text, Q4 eventually comes out of saturation, into cutin and $v_o = V_{CC} - V_{BE4,cutin} - V_{DO,cutin} \approx 3.9$ V $= V(1)$ Eq. (5-36)

(b) Assume that Q1 operates in the inverted mode as above, but Q2 is in active and Q3 in saturation at coincidence.

Hence $V_P = 0.7 + 0.7 + 0.8 = 2.2$ V

$I_{B1} = \frac{5-2.2}{5\text{ k}\Omega} = 0.56$ mA and

$I_{B2}=(1+h_{FE1})I_{B1}=(2)(0.56) = 1.12$ mA.

To keep Q4 and DO OFF, $V_{BN4} < V_{BE4,\,cutin} + V_{DO,\,cutin} + V_{CE3,\,sat} = 0.5+0.6+0.2 = 1.3$ V

Hence $V_{BN4(max)} = 1.3$ V and since Q4 is cutoff

$I_{C2(min)} = \frac{V_{CC} - V_{BN4(max)}}{2\,k\Omega} = \frac{5-1.3}{2} = 1.85$ mA, and

since $(I_{B2})(h_{FE}) = I_{C2}$

$(h_{FE2})_{min} = \frac{I_{C2(min)}}{I_{B2}} = \frac{1.85}{1.12} = 1.652.$

From part (a) $(h_{FE3})_{min} = 0$ and thus

$h_{FE,\,min} = \underline{1.652}$

(c) At coincidence $V_P = 2.3$ V (with Q2 in saturation) and if $V_1 = V(1) + V_N$ then to keep the base-emitter junction reverse biased $V_P - V_1 \leq 0.5$

or $V_P - V(1) - V_N \leq 0.5$

or $V_N \geq 2.3 - 3.9 - 0.5 = -2.0$ V and $\underline{NM(0) = -2.0\text{ V}}$

With any input low $V_P' = V_{CE1,\,sat} + V(0)$

$0.2 + 0.2 = 0.4$ V and with noise $V_P' = 0.4\text{ V} + V_N$.

The circuit will malfunction if

$V_P' > V_{BE2,\,cutin} + V_{BE3,\,cutin} = 0.5 + 0.5 = 1.0$ V

or $V_N = 1.0 - 0.4 = 0.6$ V

$\therefore$ $\underline{NM(1) = +0.6\text{ V}}$

(d) Standard load current $= \frac{V_{CC} - V_P}{5} = \frac{5-0.9}{5}$ $= 0.82$ mA. All the fan-out current flows into Q3 and $I_{C3} = 0.82$ N since Q4 and DO are OFF and they do not supply any current. $I_{B3} = 2.28$ mA from part (a). Hence for Q3 to be in saturation $I_{B3}\,h_{FE} > I_{C3}$ or $(2.28)(20) > 0.82$ N.

Hence $N_{max} = \frac{45.6}{0.82} = 55.61$

or $\underline{\text{fanout} = 55}$

since $h_{FE} > h_{FE2,\,min}$ Q2 is in saturation.

(e) At coincidence, current supplied by the battery is $I_o = I_{B1} + I_{C2} = 0.540 + 2.0 = 2.540$ mA (with Q2 in saturation) (with 0 fan-out).

When any input is low, the current supplied by the battery is I_1

$I_1 = I_{B4} + I_{C4}$.

$= 1.65 + 1.65\,(h_{FE})$ with Q4 in active

$= 1.65 + 1.65\,(20)$

$= 34.65$ mA.

Hence average power dissipated

$= \frac{V_{CC}(34.65 + 2.540)}{2} = \frac{5(34.65+2540)}{2}$

$P_{av} = \underline{92.975\text{ W}}$

<u>Note</u>: We have neglected the current drawn when Q4 is in saturation as this is only for a very short period.

5-51 a) At coincidence Q1 is in the inverted mode (because its emitter is reverse biased and its collector is forward biased). We assume Q2, Q3 in saturation, Q5 in active and Q4 at cutoff.

The $V_o = V(0) = 0.2$ V and $V_P = 0.7+0.8+0.8 = 2.3$ V.

Current through 4 kΩ $= I_1 = \frac{5-2.3}{4} = \frac{2.7}{4} = 0.675$ mA $= I_{B1}$. Then $I_{B2} = (1+h_{FE})I_{B1} = (1.5)(0.675)$

$= 1.013$ mA.

$V_{B3N} = 0.8$ V and current through 1 kΩ $= I_2 = \frac{0.8}{1}$ $= 0.8$ mA

$V_{C2N} = V_{B5N} = 0.2 + 0.8 = 1$ V, $V_{BE5} = 0.7$ V since Q5 is in active region $V_{B5N} = V_{BE5} + V_{BE4} + V_{CE3} = 1$ V,

$\therefore$ $V_{BE4} = 1 - 0.7 - 0.2 = 0.1$ V and hence Q4 is OFF

and $V_{B4N} = 0.1 + 0.2 = 0.3$ V.

Current through 0.2 kΩ $= I_5 = \frac{0.3}{0.2} = 1.5$ mA $= -I_{E5}$

$I_{B5} = \frac{-I_{E5}}{1+h_{FE}} = \frac{1.5}{31} = 0.048$ mA.

$\therefore$ $I_{C5} = h_{FE}\,I_{B5} = 0.048 \times 30 = 1.452$ mA

$V_{C5N} = 5 - 0.1452 = 4.855$ V

$V_{BC5} = 1 - 4.855 = -3.855$ and Q5 is indeed in active.

Current through 1.4 kΩ $= I_3 = \frac{5-1}{1.4} = 2.857$ mA

$I_{C2} = I_3 - I_{B5} = 2.857 - 0.048 = 2.809$ mA

and since $h_{FE}I_{B2} = 1.013 \times 30 = 30.39 > I_{C2} = 2.809$ mA, Q2 is in saturation.

$-I_{E2} = I_{C2} + I_{B2} = 2.809 + 1.013 = 3.822$ mA

and $I_{B3} = I_{E2} - I_2 = 3.822 - 0.8 = 3.022$ mA

Since Q4 is cutoff, I_{C3} is only due to fan out and

$= N\,\frac{5-0.7-0.2}{4} = 1.025$ N

$\therefore$ for Q3 to be in saturation $I_{B3}h_{FE} > I_{C3}$

$3.022 \times 30 > 1.025 \times 10$ and hence Q3 is in saturation.

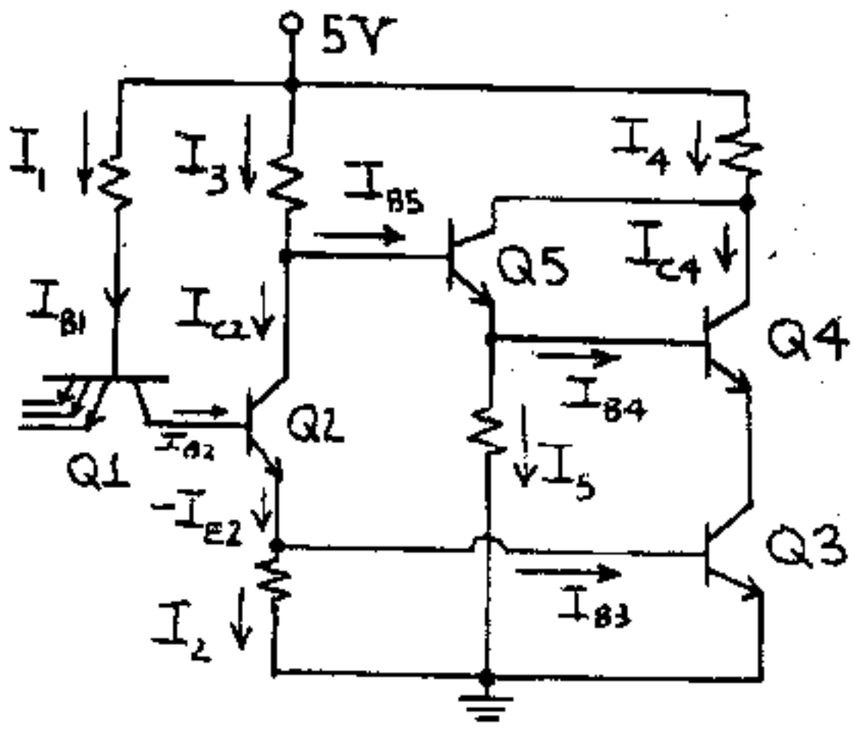

b) When at least one input is low, $V_p = 0.7 + 0.2 = 0.9$ V and Q2, Q3 are in cutoff and $V_o = V(1)$. At the steady state we assume Q5 is in saturation and Q4 at cutin, i.e. $V_{BE4} = 0.5$ V, $I_{B4} \approx 0 \approx I_{C4}$.

$$I_5 = \frac{V_{BE4} + V_o}{0.2} = \frac{0.5 + V_o}{0.2} = -I_{E5} = 2.5 + 5\,V_o \qquad (1)$$

Since Q2 is OFF $I_3 = I_{B5} = \dfrac{5 - 0.8 - 0.5 - V_o}{1.4} = \dfrac{3.7 - V_o}{1.4}$

$$= 2.643 - 0.714\,V_o \qquad (2)$$

Now $V_{CN5} = 0.2 + 0.5 + V_o$, $I_{C5} = \dfrac{5 - 0.7 - V_o}{0.1}$

$$= 43 - 10\,V_o \qquad (3)$$

Since $-I_{E5} = I_{B5} + I_{C5}$, $2.5 + 5\,V_o = 45.643 - 10.714\,V_o$ or $V_o = 2.746$ V.

From (2) $I_{B5} = 2.643 - (0.714)(2.746) = 0.682$ mA.

From (3) $I_{C5} = 43 - 27.46 = 15.54$ mA and $-I_{E5} = 15.54 + 0.682 = 16.222$ mA.

Since $h_{FE} I_{B5} = 30 \times 0.682 = 20.46 > I_{C5}$, Q5 is indeed in saturation.

c) $V(0) = 0.2$ V and $V(1) = 2.746$ V from part (b).

d) Assume all inputs high. Then $V_o = 0.2$ V. Now let at least one input become low; (just after the change) we assume that Q2, Q3 are at cutoff, Q5 is in saturation and Q4 is active, and $v_o = 0.2$ V because of the presence of stray capacitance. Since Q5 is in saturation, $V_{CB4} = V_{CE5} = 0.2$ V and hence the collector of Q4 is reverse biased. If Q4 is ON, it cannot be saturated; hence it must be active.

Since Q2 is OFF, $I_3 = I_{B5} = \dfrac{5 - 0.8 - 0.7 - 0.2}{1.4} = 2.357$ mA

$V_{B4N} = 0.7 + 0.2 = 0.9$ V and $I_5 = \dfrac{0.9}{0.2} = 4.5$ mA.

Notice that

$$V_{C4N} = 0.2 + 0.7 + 0.2 = 1.1 \text{ V and } I_4 = I_{C4} + I_{C5} = \frac{5 - 1.1}{0.1}$$

$$= 39 \text{ mA.} \qquad (4)$$

$$-I_{E5} = I_{C5} + I_{B5} = I_{C5} + 2.357 = I_{B4} + I_5 = I_{B4} + 4.5$$

$$I_{C5} + 2.357 = I_{B4} + 4.5 \qquad (5)$$

Since Q4 is in active $I_{C4} = 30 I_{B4}$ and from (4)

$$I_{C5} + 30 I_{B4} = 39 \qquad (6)$$

solving (5) and (6) we obtain $I_{C5} = 3.332$ mA and $I_{B4} = 1.189$ mA

$I_{B5} h_{FE} = 2.357 \times 30 = 70.71 > I_{C5}$ ∴ Q5 is indeed in saturation

∴ The peak current is $= I_{B1} + I_3 + I_4$

$$= \frac{5 - 0.9}{4} + 2.357 + 39$$

$$= 1.025 + 2.357 + 39$$

$$= \underline{42.382 \text{ mA}}$$

e) From part (a), $I_{B3} = 3.022$ mA at coincidence and $I_{C3} = 1.025N$. Since $I_{C3} \le h_{FE} I_{B2}$ for saturation of Q3 then $N \le \dfrac{(30)(3.022)}{1.025} = 88.45$

Thus, $N_{max} = 88$.

5-52 From Fig. 5-25a we see that if all inputs are low, then in each succeeding stage

$$I_B = [V_{CC} - V_{BE,sat}] \frac{1/N}{R_c + R_b/N}$$

$$= \frac{1}{R_b + NR_c} [V_{CC} - V_{BE,sat}]$$

and $I_C = \dfrac{V_{CC} - V_{CE,sat}}{R_c}$

For the succeeding stage to be in saturation

$h_{FE} I_B \ge I_C$ or

$\dfrac{h_{FE} R_c}{R_b + NR_c} \ge \dfrac{V_{CC} - V_{CE,sat}}{V_{CC} - V_{BE,sat}}$ and, solving for N,

$N \le h_{FE} \dfrac{V_{CC} - V_{BE,sat}}{V_{CC} - V_{CE,sat}} - \dfrac{R_b}{R_c}$ (1) or

$$N \le h_{FE} \frac{1 - V_{BE,sat}/V_{CC}}{1 - V_{CE,sat}/V_{CC}} - \frac{R_b}{R_c}$$

or $N \le h_{FE} \left[1 - \dfrac{V_{BE,sat}}{V_{CC}}\right]\left[1 + \dfrac{V_{CE,sat}}{V_{CC}}\right] - \dfrac{R_b}{R_c}$ and

$N \le h_{FE}\left(1 + \dfrac{V_{CE,sat} - V_{BE,sat}}{V_{CC}}\right) - \dfrac{R_b}{R_c}$ where

we have neglected $\left(\dfrac{V_{BE,sat}}{V_{CC}}\right)\left(\dfrac{V_{CE,sat}}{V_{CC}}\right)$

compared with 1.

or $N_{max} = (h_{FE})_{min} - (h_{FE})_{min} \frac{0.6}{V_{CC}} - \frac{R_b}{R_c}$

using Table 3-1.

5-53 At $t = 150^{\circ}C$, since I_{CBO} doubles every $10^{\circ}C$

$I_{CBO} = 10 \times 10^{-9} \times 2^{\left(\frac{150-25}{10}\right)} = 5.793 \times 10^{-5} A = 0.0579$ mA

If any input is low, this transistor must be at cutoff, and $V_{BE} \leq 0.5$ V.

or $R_b \times 0.70579 + 0.2 \leq 0.5$

$R_b \leq \frac{0.3}{0.0579} = 5.18$ kΩ hence $R_{b(max)} = \underline{5.18 \text{ k}\Omega}$

At the lowest temperature $-50^{\circ}C$, the fan-out transistors must be in saturation when all inputs are low.

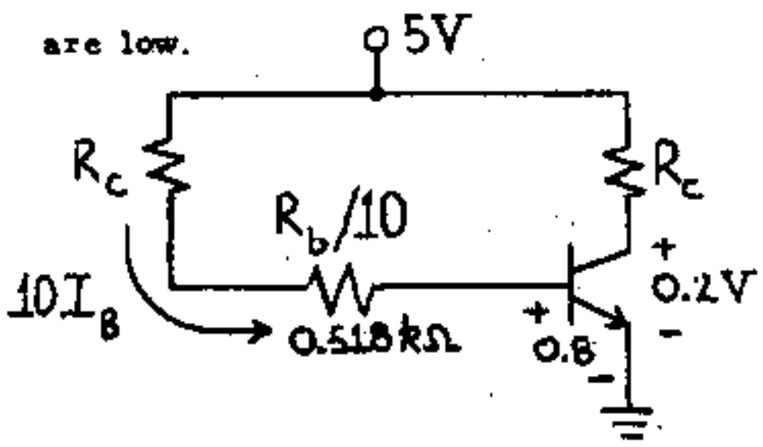

$I_C = \frac{5-0.2}{R_c} = \frac{4.8}{R_c}$; $10 I_B = \frac{5-0.8}{R_c + 0.518}$

Since $h_{FE} I_B \geq I_C$, $30 I_B \geq I_C$ or $\frac{12.6}{R_c + 0.518} \geq \frac{4.8}{R_c}$

or $12.6 R_c \geq 4.8 R_c + 2.486$

or $R_c \geq 318.72\ \Omega$

or $R_{c(min)} = 318.72\ \Omega$

5-54 a) If any input is high, then that transistor is saturated and $v_o = \underline{V(0) = 0.2 \text{ V}}$.

When all inputs are low = 0.2 V, all the transistors are cut-off and the output is high = V(1).

Thus the transistors in the next stage are all saturated, and the equivalent circuit is as shown.

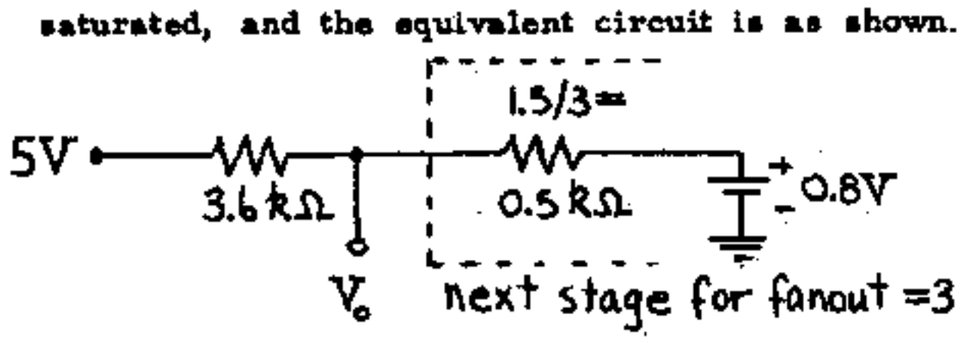

∴ By superposition

$V_o = \frac{5 \times 0.5}{3.6 + 0.5} + \frac{0.8 \times 3.6}{3.6 + 0.5} = 1.312$ V

∴ $\underline{V(1) = 1.312 \text{ V}}$

b) When any input is low at V(0) = 0.2 V, that transistor should be cutoff. Hence the circuit malfunctions if $V(0) + V_n \geq 0.5$ V

∴ $V_n \geq 0.5 - 0.2 = 0.3$ V or $\underline{NM(1) = +0.3 \text{ V}}$

When all inputs are high at V(1) = 1.312 V, then all the transistors are saturated and the output = V(0) = 0.2 V

Hence the circuit malfunctions if $V(1) + V_n \leq 0.8$

or $V_n \leq 0.8 - 1.312 = -0.512$ V

or $\underline{NM(0) = -0.512 \text{ V}}$

c) When all inputs are low the input transistors are OFF and the output circuit is as in part (a). The base current for each output transistor is

$I_B = \frac{1}{3}\left(\frac{V_o - 0.8}{0.5}\right) = \frac{1.312 - 0.8}{1.5} = 0.341$ mA

$I_C = \frac{V_{CC} - V_{CE,sat}}{R_c} = \frac{5 - 0.2}{3.6} = 1.333$ mA

Hence $(h_{FE})_{min} = \frac{I_C}{I_B} = \frac{1.333}{0.341} = \underline{3.91}$

d) When all the input transistors are OFF, the only current drawn is because of the succeeding stages.

$I_{3.6k} = \frac{5 - 1.312}{3.6} = 1.02$ mA and

$P_{OFF} = 1.024 \times 5 = \underline{5.12 \text{ W}}$

When all the transistors ON, $I_{3.6k} = \frac{5 - 0.2}{3.6}$

$= 1.333$ mA

∴ $P_{ON} = 5 \times 1.333 = \underline{6.667 \text{ W}}$

5-55 If all the inputs are at V(1) = 1.5 V then all the transistors are ON and the output = 0.2+0.2+0.2 = 0.6 V = V(0)

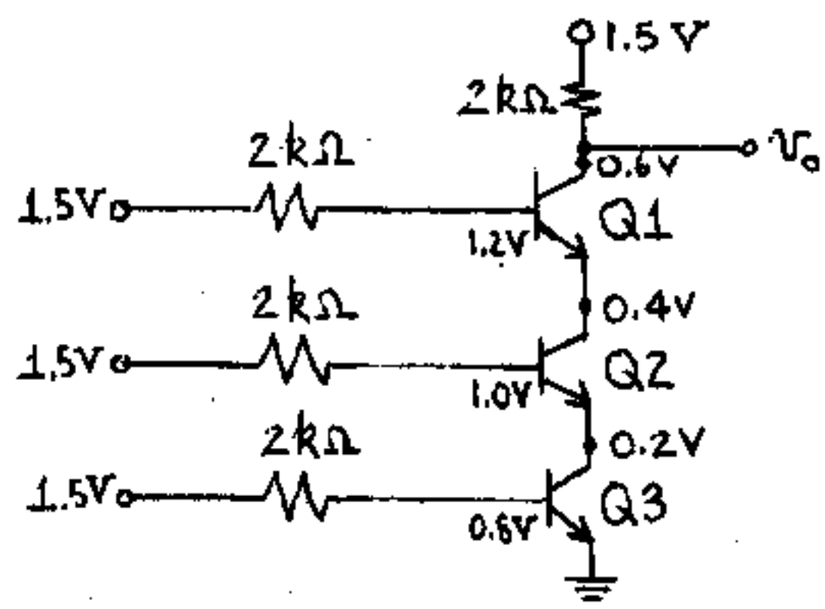

The base voltages are as shown, and

$I_{B1} = \frac{1.5 - 1.2}{2} = 0.15$ mA

$I_{B2} = \frac{1.5 - 1.0}{2} = 0.25$ mA

$I_{B3} = \frac{1.5 - 0.8}{2} = 0.35$ mA

5-55 (cont'd)

and $I_{C1} = \frac{1.5-0.6}{2} = \underline{0.45\ mA}$

$I_{C2} = I_{C1} + I_{B1} = 0.45 + 0.15 = \underline{0.6\ mA}$

$I_{C3} = I_{C2} + I_{B2} = 0.6 + 0.25 = \underline{0.85\ mA}$

For saturation $h_{FE} \geq \frac{I_C}{I_B}$

Hence $h_{FE1} \geq \frac{I_{C1}}{I_{B1}} = \frac{0.45}{0.15} = 3.0$

$h_{FE2} \geq \frac{0.6}{0.25} < 3$

$h_{FE3} \geq \frac{0.85}{0.35} < 3$

hence $\underline{(h_{FE})_{min} = 3.0}$

b)

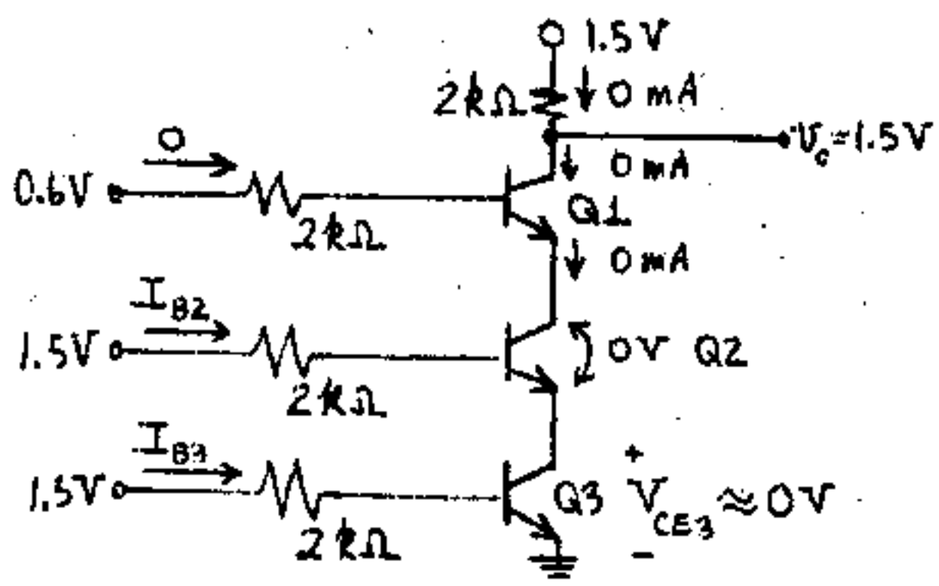

Since the input to Q1 is 0.6 V, Q1 must be OFF. Hence $I_{C1}=0$ and $v_o = 1.5\ V = V(1)$ as it must be for NAND operation. Since $I_{B1} = I_{C1} = 0$ then $-I_{E1} = I_{C2} = 0$ as shown. Since Q2 has base current but no collector current then $V_{CE} \approx 0$ because the output characteristics of a CE transistor pass essentially through the origin (Fig. 3-12). As a first approximation let us neglect V_{CE3}. Then

$$I_{B2} = \frac{1.5 - V_{BE2}}{2} \approx \frac{1.5-0.7}{2} = 0.4\ mA = I_{B3},$$

where we have considered the base-emitter junction of Q2 as a diode whose drop is 0.7 V. For Q3, $I_{B3} = I_{C3} = 0.4$ mA and from Fig. 3-12 $V_{CE3} \approx 0$.

<u>In summary</u> $V_{CE3} = V_{CE2} = 0$ and $V_{CE1} = 1.5$ V

$I_{C1} = I_{C2} = I_{B1} = 0$ and $I_{B2} = I_{B3} = I_{C3} = 0.4$ mA.

$I_{E1} = 0,\ I_{E2} = -0.4\ mA,\ I_{E3} = -0.8\ mA$

5-56 (a) If the inputs of Q1 and Q2 are low then we assume that Q1 and Q2 are OFF and Q3 is ON. Then $V_E = -0.7$ and $I = \frac{V_E + V_{EE}}{0.42} = \frac{2.5}{0.42} = 5.95$ mA. Neglecting base current of Q3 and Q4, I flows in 170 Ω resistor hence $V_{C3} = -0.170 \times 5.95 + 1.32 = 1.32 - 1.01 = 0.31$ V and $v_Y = V(0) = -0.7 + V_{C3} = \underline{-0.39\ V}$. Notice that the current in 270 Ω of Q4 is $I' = \frac{v_Y + V_{EE}}{0.270} = \frac{2.81}{0.270} = 10.4$ mA

Assume $\beta = 100$ for the transistors; then $I_{B4} = \frac{I'}{100} = 0.1$ mA which is negligible in comparison with 5.95 mA. Now we verify our assumption that Q1 and Q2 are OFF. Since A and B are low that means $v_A = -0.39$ V and we have $V_E = -0.7$ V hence $V_{BE1} = V_{BE2} = v_A - V_E = -0.39 + 0.7 = 0.31$ V which is less than the cutin voltage of a transistor (0.5 V) therefore Q1 and Q2 are OFF. If either Q1 or Q2 are ON we assume that Q3 is OFF and Q4 acts as a diode since there is no current in the 170 Ω so that the base and collector of Q4 are tied together. The equivalent circuit for this diode is indicated below.

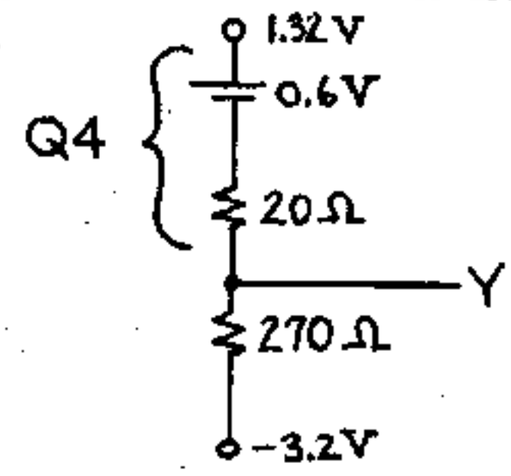

Using superposition we obtain

$$v_Y = (1.32 - 0.6)\frac{0.270}{0.290} + (-3.2)\frac{0.020}{0.290} = 0.67 - 0.22 = 0.45\ V = V(1)$$

If either input is at $V(1) = 0.45$ V then $V_E = -0.7 + 0.45 = -0.25$ V. Hence $V_{BE3} = 0 - (-0.25) = 0.25\ V < 0.5$ therefore Q3 is OFF as assumed.

(b) In part (a) when both inputs are low the input transistors are forward biased by 0.31 V then with $V_{BE(cutin)} = 0.5$ V the noise margin is +0.19 V = +190 mV. If Q3 is OFF it is found that Q3 is forward biased by 0.25 V hence -0.25 V = -250 mV noise margin.

(c) From part (a) when Q3 is conducting $V_{C3} = 0.31\ V = V_{CB3}$ hence the collector junction is reverse biased and therefore Q3 is in its active region. From part (a) when either Q1 or Q2 is conducting $v_Y = V(1)$ hence $v_{Y'} = V(0) = -0.39$ V hence $V_{C1} = v_{Y'} + 0.7 = +0.31$ V but $V_{B1} = V(1) = 0.45$ V hence $V_{CB1} = -0.14$ V. This is a forward voltage for the collector junction of an n-p-n transistor but since

it is less than $V_\gamma = 0.5$ V then the input transistor is in its active region.

(d) When the input to Q1 is V(1)=+0.45 then $Y' = \overline{Y} = V(0) = -0.39$ V and $V_{C1} = -0.39 + 0.7 = 0.31$ V. From part (a) we have $V_E = -0.25$ V, hence

$$I = \frac{3.2-0.25}{0.42} = \frac{2.95}{0.42} = 7.02 \text{ mA}.$$

Neglecting base currents of Q1 and Q5 I flows in R but the voltage drop across R is 1.32 - 0.31 = 1.01 V hence $R = \frac{1.01}{7.02} = \underline{144\ \Omega}$

(e) From part (a) for Q3 conducting I = 5.95 mA. From part (d) for Q1 conducting I = 7.02 mA. The average current through the 420 Ω resistor is $\frac{1}{2}(5.95+7.02) = \frac{12.97}{2} = 6.48$ mA. The total supply voltage is 1.32 + 3.2 = 4.52 V hence the power lost due to I_{av} is 4.52 × 6.48 = 29.3 mW. The current in Q4 is I' = 10.4 mA from part (a) and the current in Q5 is $\frac{V(1)+3.2}{0.27} = \frac{3.65}{0.27} = 13.5$ mA. Hence the sum of these two current is 23.9 mA and the power

5-58 (a) $Y = (\overline{A+B}) + (\overline{C+D}) = A+B+\overline{C}\,\overline{D}$ where we have used DeMorgan's law.

(b) $Y = \overline{Y}_1 + \overline{Y}_2 = (\overline{A+B}) + (\overline{C+D}) = \overline{A}\,\overline{B} + \overline{C}\,\overline{D}$

(c) $Y = Y_1 + Y_2 = A + B + \overline{C} + \overline{D} = A + B + \overline{CD}$

— — — — — — — —

5-14 If either input A or B or both are in the 0 state, V(0)=0 V, then at least one of the diodes D_1 or D_2 conducts and clamps the output to 0 V, or Y=0. This argument verifies all items in the truth table except lines 4 and 8.

Consider now the situation where a coincidence occurs at A and B. If S is in the 0 state, then Q is cutoff, and the output of the NOT circuit is

CHAPTER 6

6-1 a) 8 input leads (4 per AND gate)
1 output lead
1 ground lead
1 power supply

∴ 11 leads total

b) 11 input leads (4+2+3+2)
1 output lead
1 ground lead
1 power supply

14 leads total

6-2 a) $S_n = \bar{A}_n\bar{B}_nC_{n-1}+\bar{A}_nB_n\bar{C}_{n-1}+A_n\bar{B}_n\bar{C}_{n-1}+A_nB_nC_{n-1}$

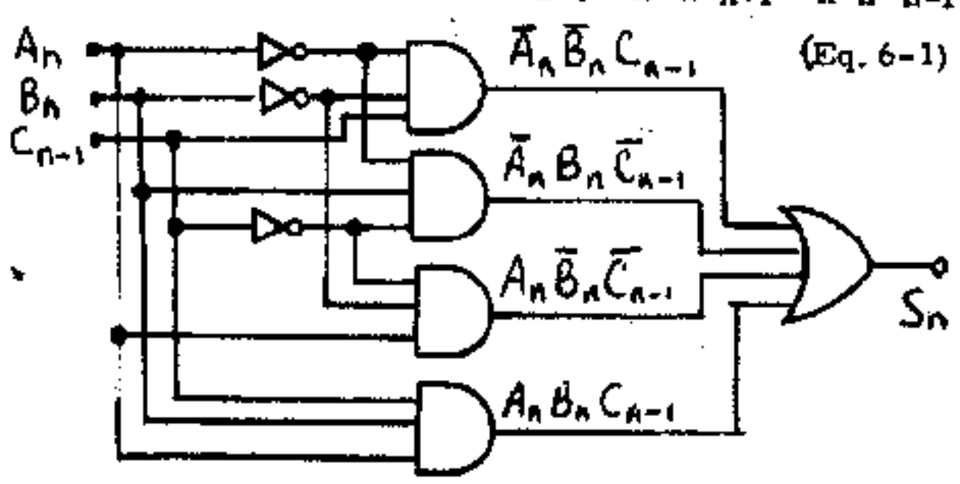

(Eq. 6-1)

b) $A_n \oplus B_n \oplus C_{n-1} = (A_n\bar{B}_n + \bar{A}_nB_n) \oplus C_{n-1}$

$= (A_n\bar{B}_n+\bar{A}_nB_n)\bar{C}_{n-1} + \overline{(A_n\bar{B}_n+\bar{A}_nB_n)}\,C_{n-1}$

$= A_n\bar{B}_n\bar{C}_{n-1}+\bar{A}_nB_n\bar{C}_{n-1}+(\bar{A}_n+B_n)(A_n+\bar{B}_n)C_{n-1}$

$= A_n\bar{B}_n\bar{C}_{n-1}+\bar{A}_nB_n\bar{C}_{n-1}+\bar{A}_n\bar{B}_nC_{n-1}+A_nB_nC_{n-1}$

which is the same as (Eq. 6-1)

6-3 a) $\bar{C}' = \overline{BC+CA+AB} = (\overline{BC})(\overline{CA})(\overline{AB})$ (De Morgan)

$=(\bar{B}+\bar{C})(\bar{C}+\bar{A})(\bar{A}+\bar{B}) = (\bar{B}\bar{C}+\bar{B}\bar{A}+\bar{C}\bar{C}+\bar{C}\bar{A})(\bar{A}+\bar{B})$

Noting that XX=X we have

$\bar{C}' = \bar{B}\bar{C}\bar{A}+\bar{B}\bar{A}+\bar{C}\bar{A}+\bar{C}\bar{A}+\bar{B}\bar{C}+\bar{B}\bar{A}+\bar{B}\bar{C}+\bar{C}\bar{A}\bar{B}$

Since $X + X = X$ we have

$\bar{C}' = \bar{B}\bar{A}(\bar{C}+1)+\bar{C}\bar{A}+\bar{B}\bar{C} = \bar{B}\bar{A}+\bar{C}\bar{A}+\bar{B}\bar{C}$

$= \bar{B}\bar{C}+\bar{C}\bar{A}+\bar{A}\bar{B}$

b) $D=(A+B+C)\bar{C}'=(A+B+C)(\bar{B}\bar{C}+\bar{C}\bar{A}+\bar{A}\bar{B})$

Since $X\bar{X} = 0$, then

$D=A\bar{B}\bar{C}+B\bar{C}\bar{A}+C\bar{A}\bar{B}$

from Eq. (6-1) $S_n=\bar{A}\bar{B}C+\bar{A}B\bar{C}+A\bar{B}\bar{C}+ABC=D+ABC$

6-4 (a) The truth table is identical with that for the carry C_n of a full adder with $A = A_n$, $B = B_n$ and $C = C_{n-1}$ (Fig. 6-5)
(b) Eq. (6-2)
(c) Eq. (6-4), namely $Y = BC+CA+AB$

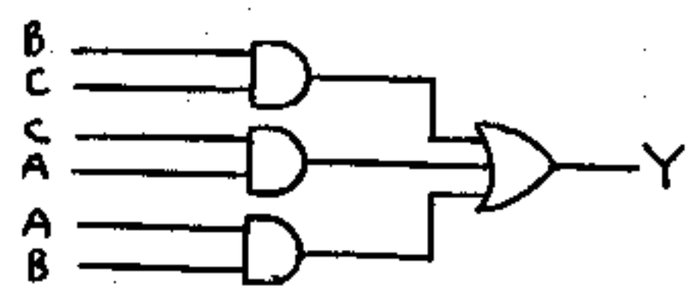

6-5 Eq. (6-5) is $\bar{C}_n=\bar{C}_{n-1}(\bar{B}_n+\bar{A}_n)+\bar{A}_n\bar{B}_n$

Applying De Morgan's theorem we get

$\bar{C}_n = \bar{C}_{n-1}(\overline{B_nA_n})+(\overline{A_n+B_n})$ (1)

n=0 gives $\bar{C}_0=\bar{C}_{-1}\ (\overline{B_0A_0})+(\overline{A_0+B_0})$ (2)

n=1 gives $\bar{C}_1=\bar{C}_0(\overline{B_1A_1})+(\overline{A_1+B_1})$ (3)

Substitute (2) into (3)

$\bar{C}_1=[\bar{C}_{-1}(\overline{B_0A_0})+(\overline{A_0+B_0})](\overline{B_1A_1})+(\overline{A_1+B_1})$

$=\bar{C}_{-1}(\overline{B_0A_0})(\overline{B_1A_1})+(\overline{A_0+B_0})(\overline{B_1A_1})+(\overline{A_1+B_1})$ (4)

n=2 into (1)

$\bar{C}_2=\bar{C}_1(\overline{B_2A_2})+(\overline{A_2+B_2})$ (5)

Substitute (4) into (5)

$\bar{C}_2=[\bar{C}_{-1}(\overline{B_0A_0})(\overline{B_1A_1})+(\overline{A_0+B_0})(\overline{B_1A_1})+(\overline{A_1+B_1})](\overline{B_2A_2})$
$+(\overline{A_2+B_2})$

$\bar{C}_2=\bar{C}_{-1}(\overline{B_0A_0})(\overline{B_1A_1})(\overline{B_2A_2})+(\overline{A_0+B_0})(\overline{B_1A_1})(\overline{B_2A_2})$

$+(\overline{A_1+B_1})(\overline{B_2A_2})+(\overline{A_2+B_2})$ (6)

n=3 into (1)

$\bar{C}_3=\bar{C}_2(\overline{B_3A_3})+(\overline{A_3+B_3})$ (7)

Substitute (6) into (7) yields

$\bar{C}_3=\bar{C}_{-1}(\overline{B_0A_0})(\overline{B_1A_1})(\overline{B_2A_2})(\overline{B_3A_3})$

$+(\overline{A_0+B_0})(\overline{B_1A_1})(\overline{B_2A_2})(\overline{B_3A_3})$

$+(\overline{A_1+B_1})(\overline{B_2A_2})(\overline{B_3A_3})$

$+(\overline{A_2+B_2})(\overline{B_3A_3})+(\overline{A_3+B_3})$

6-6

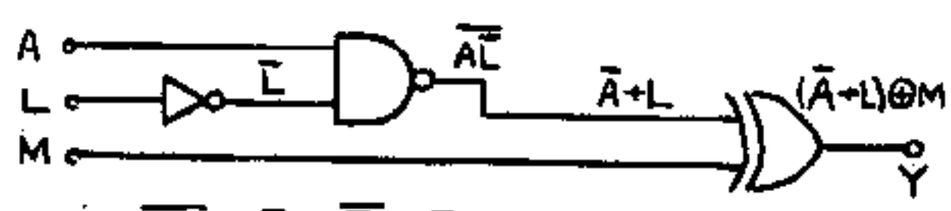

Note: $\overline{A\bar{L}} = \bar{A} + \bar{\bar{L}} = \bar{A} + L$

$Y = (\bar{A}+L) \oplus M = (\bar{A}+L)\bar{M}+\overline{(\bar{A}+L)}\,M$

$= \bar{A}\bar{M}+L\bar{M}+(\bar{A}\bar{L})M = \bar{A}\bar{M}+L\bar{M}+A\bar{L}M$

For $L = 0$, $M = 0 \Rightarrow Y = \bar{A}$
" $L = 0$, $M = 1 \Rightarrow Y = A$
" $L = 1$, $M = 0 \Rightarrow Y = 1$
" $L = 1$, $M = 1 \Rightarrow Y = 0$

6-7 (a)

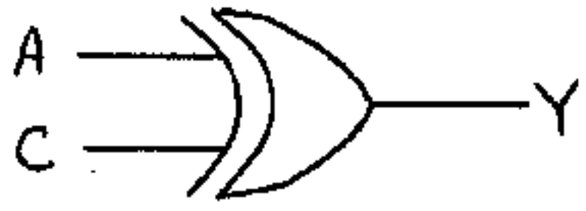

Truth table:

A	C	Y = A ⊕ C
0	0	0 = A
0	1	1 = $\bar{A}$
1	0	1 = A
1	1	0 = $\bar{A}$

Since Y is either A or $\bar{A}$, depending on the value of C this implies that the ⊕ gate is a true-complement unit.

(b) From the Truth Table we see that Y = A when C = 0.

6-8 (a) Truth table for A minus B

A	B	Remainder		D	P
0	0	0	0	0	0
0	1	1	1	1	1
1	0	0	1	1	0
1	1	0	0	0	0

(b) $D = A \oplus B = A\bar{B} + \bar{A}B$; i.e. D is 1 if one and only one input (A or B) is 1

$P = \bar{A}B$ from the above truth table, i.e., P is true if "B but not A" is 1

6-9

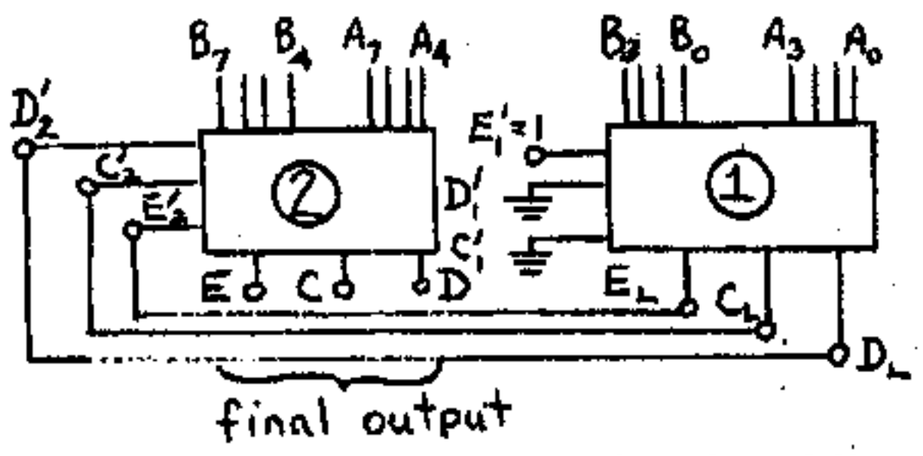

The above connections are explained as follows: We input and compare the first 4 (LSB) bits of A and B to unit 1 and the last 4 bits(MSB) of A and B to unit 2. In the ckt of Fig. we have the lines C' and E' (D terminal not shown) and so we have the internal connections.

If $A = B \Rightarrow E = 1 \Rightarrow E_0 \cdot E_1 \cdot E_2 \cdot E_3 \cdot E_4 \cdot E_5 \cdot E_6 \cdot E_7 = 1$ where $E_L = E_0E_1E_2E_4$.

$E_L \cdot E_4 \cdot E_5 \cdot E_6 \cdot E_7 = 1 \Rightarrow$ connection of E_L justified.

If $A > B \Rightarrow C = 1 \Rightarrow A_7\bar{B}_7 + E_7A_6\bar{B}_6 + E_7E_6A_5\bar{B}_5 + E_7E_6E_5A_4\bar{B}_4$
$+ E_7E_6E_5E_4(A_3\bar{B}_3 + E_3A_2\bar{B}_2 + E_3E_2A_1\bar{B}_1 + E_3E_2E_1A_0\bar{B}_0) = 1$

6-10 A=B requires that both, the low order bits and the high order bits be equal.

Hence $E = E_HE_L$

A > B requires that

High order bits of A are greater than high order bits of B (C_H is true)

Or high order bits of A and B are equal (E_H is true) and the lower order bits of A are greater than low order bits of B (C_L is true)

Hence $C = C_H + E_HC_L$

A < B similarly requires that

D_H is true or both E_H and D_L are true

Hence $D = D_H + E_HD_L$

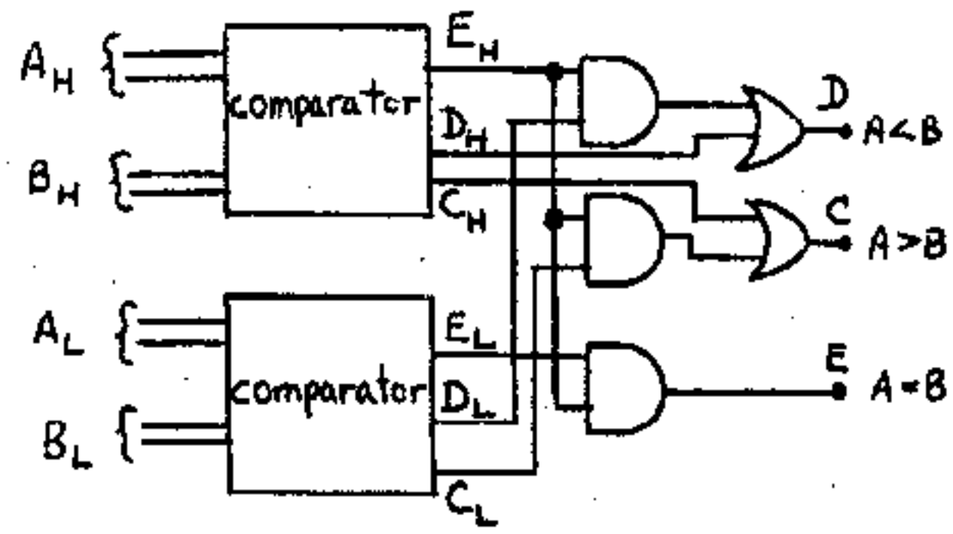

6-11 A=B means both sign and magnitude bits are the same

A<B means A is negative and B is positive ($S_A > S_B$) or the sign bits are the same ($S_A = S_B$) and magnitude of A is less than magnitude of B ($A_m < B_m$)

A>B means A is positive and B is negative ($S_A < S_B$) or the sign bits are the same, ($S_A = S_B$) and $A_m > B_m$

The logic diagram is as shown below

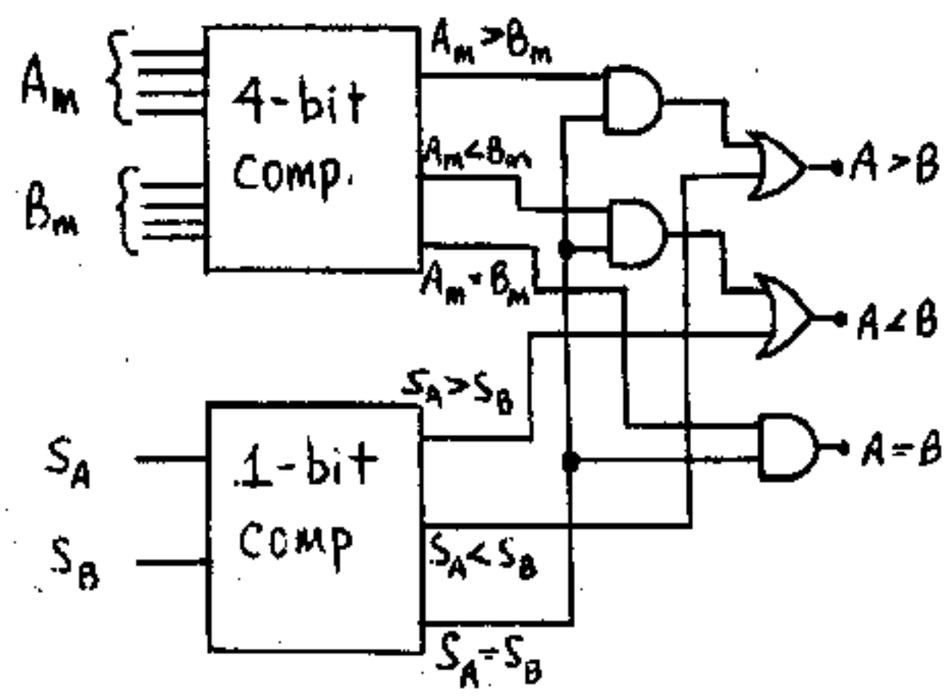

Note that if A = +0000 and B = -0000, the above implementation will give A > B.

6-12 a) $Y_1=(A\oplus B)\oplus C$; $Y_2=A\oplus(B\oplus C)$

A	B	C	A⊕B	$Y_1=(A\oplus B)\oplus C$	B⊕C	$Y_2=A\oplus(B\oplus C)$
0	0	0	0	0	0	0
0	0	1	0	1	1	1
0	1	0	1	1	1	1
0	1	1	1	0	0	0
1	0	0	1	1	0	1
1	0	1	1	0	1	0
1	1	0	0	0	1	0
1	1	1	0	1	0	1

We see that Y_1 and Y_2 are identical, $\therefore$ $Y_1=Y_2$

b) Assume $A=B=C=0 \Rightarrow Y=(A\oplus B)\oplus C=0$

" $A=1, B=C=0 \Rightarrow Y=(1\oplus 0)\oplus 0=1$

" $A=B=1, C=0 \Rightarrow Y=(1\oplus 1)\oplus 0=0$

" $A=B=C=1 \Rightarrow Y=(1\oplus 1)\oplus 1=1$

$\therefore$ Y=1 when [no. of variables = 1] = 1, 3 = odd

Y=0 " " = 0, 2 = even

6-13

Row	A	B	C	D	A⊕B	C⊕D	Z=(A⊕B)⊕(C⊕D)
0	0	0	0	0	0	0	0
1	0	0	0	1	0	1	1
2	0	0	1	0	0	1	1
3	0	0	1	1	0	0	0
4	0	1	0	0	1	0	1
5	0	1	0	1	1	1	0
6	0	1	1	0	1	1	0
7	0	1	1	1	1	0	1
8	1	0	0	0	1	0	1
9	1	0	0	1	1	1	0
10	1	0	1	0	1	1	0
11	1	0	1	1	1	0	1
12	1	1	0	0	0	0	0
13	1	1	0	1	0	1	1
14	1	1	1	0	0	1	1
15	1	1	1	1	0	0	0

We see that Z = 1 for rows 1, 2, 4, 7, 8, 11, 13, 14 where there are always an odd number of inputs = 1. Also Z = 0 for rows 0, 3, 5, 6, 9, 10, 12, 15 where there are always an even number of inputs = 1.

6-14 (a)

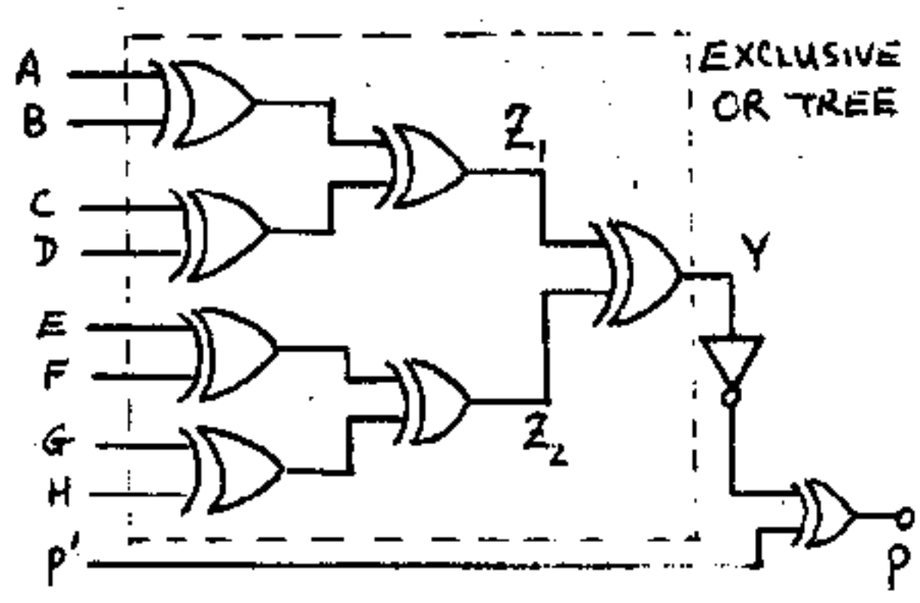

(b) Y=1 if and only if one of Z_1 and Z_2=1. Assume Z_1=1 (Z_2=0) ⇒ an odd number of the 1st subtree inputs (A, B, C, D) is =1 and an even no. of the 2nd no. of inputs (E, F, G, H) is =1 ⇒ totally an odd no. of inputs is 1. If P' is grounded (P'=0), P=0 for odd parity and P=1 for even parity.

6-15 (a)

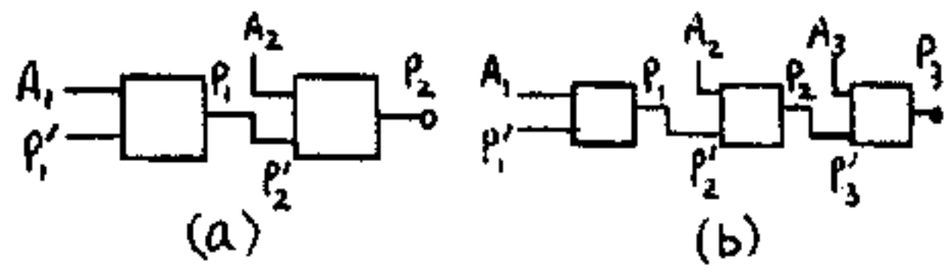

with P_1' = 1.

Parity of A_1	P_1	Parity of A_2	P_2	Parity of A_1 & A_2
odd	1	odd	1	even
odd	1	even	0	odd
even	0	even	1	even
even	0	odd	0	odd

These agree

(b) It is easy to verify by constructing a table as in part (a) that for proper operation it is now required that P_1' = 0. In general P_1' = 1 if an even number of units are cascaded and P_1' = 0 if an odd number of units are cascaded.

(c) Same as part (a), except that six of the inputs are grounded.

6-16 (a)

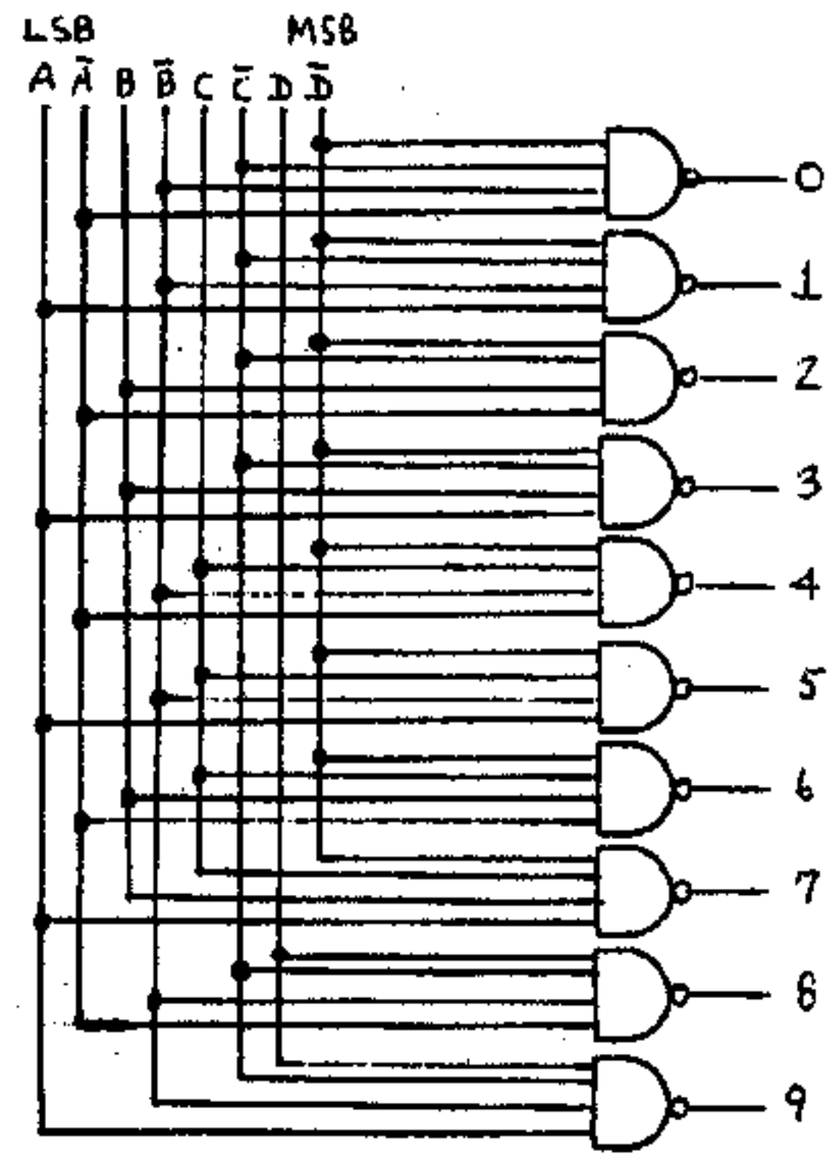

(b) Use inputs A, B and C but ground D. Use only the outputs 0, 1, 2 .... 7. Since D = 0 the first 8 gates are enabled, while the output of gates 8 and 9 are always 1.

6-17 (a)

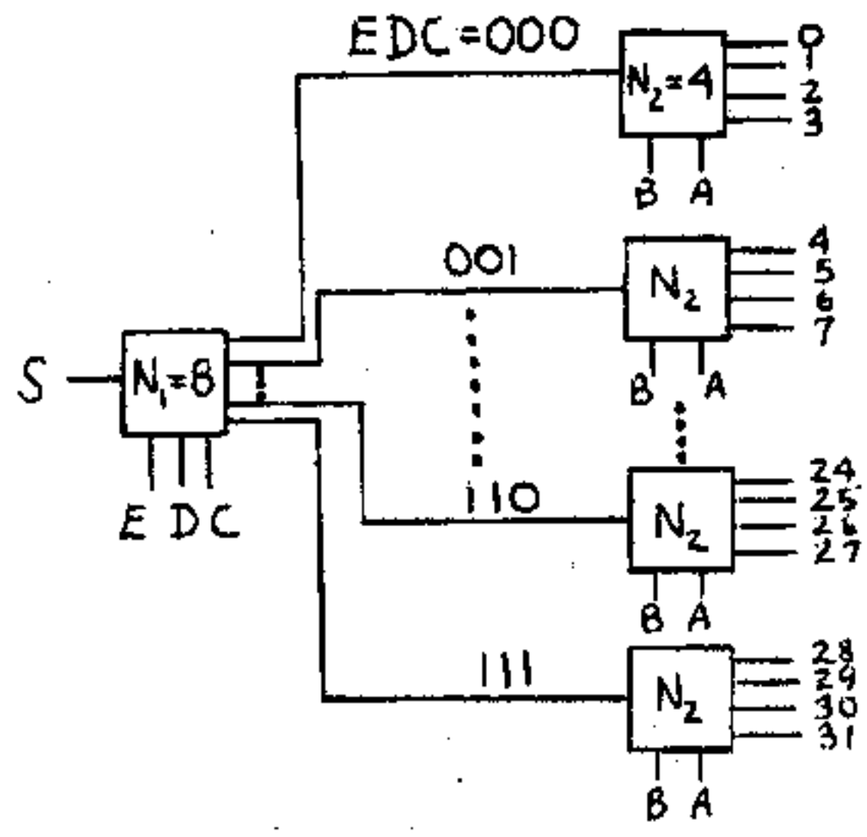

output 25 corresponds to EDCBA = 11001, where the two least significant bits come from N_2, and the three most significant bits from N_1.

(b) If there are two N_2 [2 input - 4 output demultiplexer] per chip, then the total number of chips $= 1 + \frac{8}{2} = 5$.

6-18 (a)

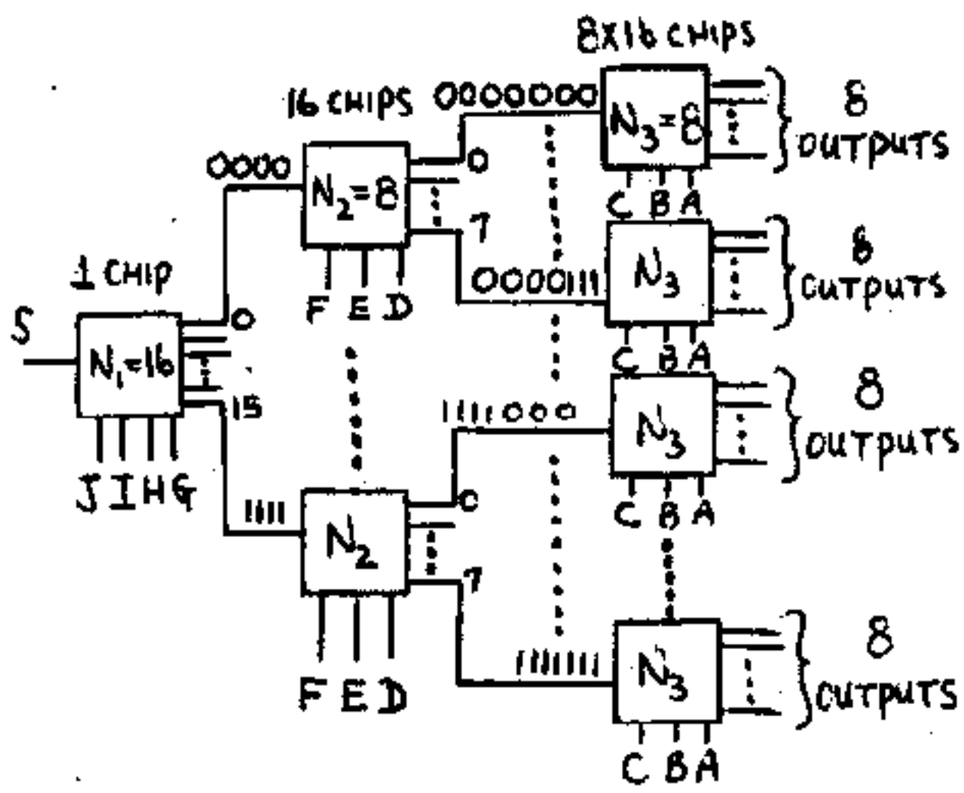

(b) Total chips = 1 + 16 + 8 x 16 = 1 + 16 + 128 = 145

(c)

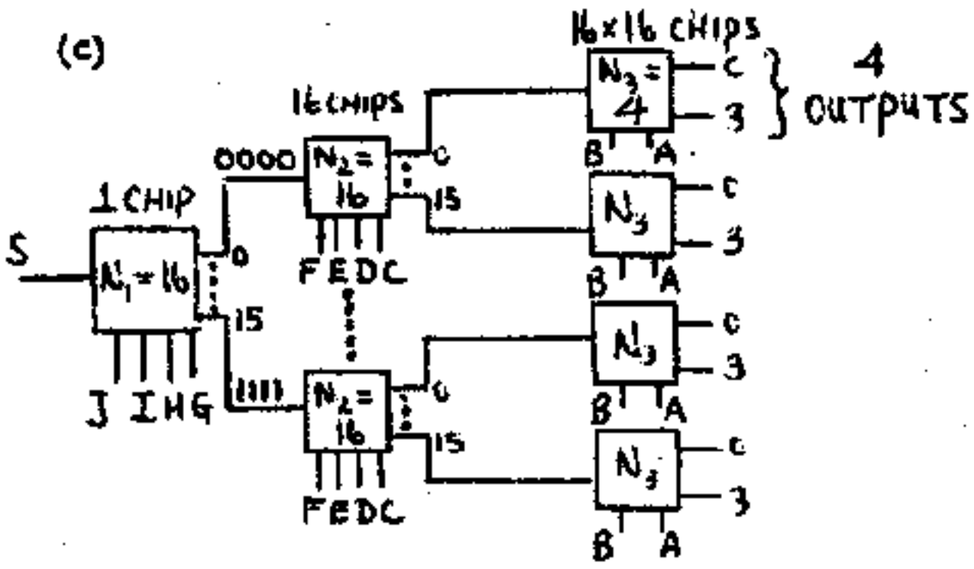

Total chips $= 1 + 16 + \frac{16 \times 16}{2} = 145$

6-19 (a) 1-16 demultiplexer has 16 Nand gates, each with 5 inputs: 4 for addressing a given line and the fifth input is the data input.

∴ Totally there are 16 x 5 = 80 gate inputs.

(b) Each 1-to-4 demultiplexer has 4 Nand gates, each with 3 inputs (2 for addressing and 1 for data)

∴ There are 3 x 4 = 12 gate inputs per 1-to-4 demultiplexer. To get a 1-to-16 demultiplexer using 1-to-4 demultiplexer we require a tree network with 5 demultiplexers. (1 demultiplexer in the first level and 4 in the second level)

∴ Total gate inputs = 12 x 5 = 60

6-20 (a)

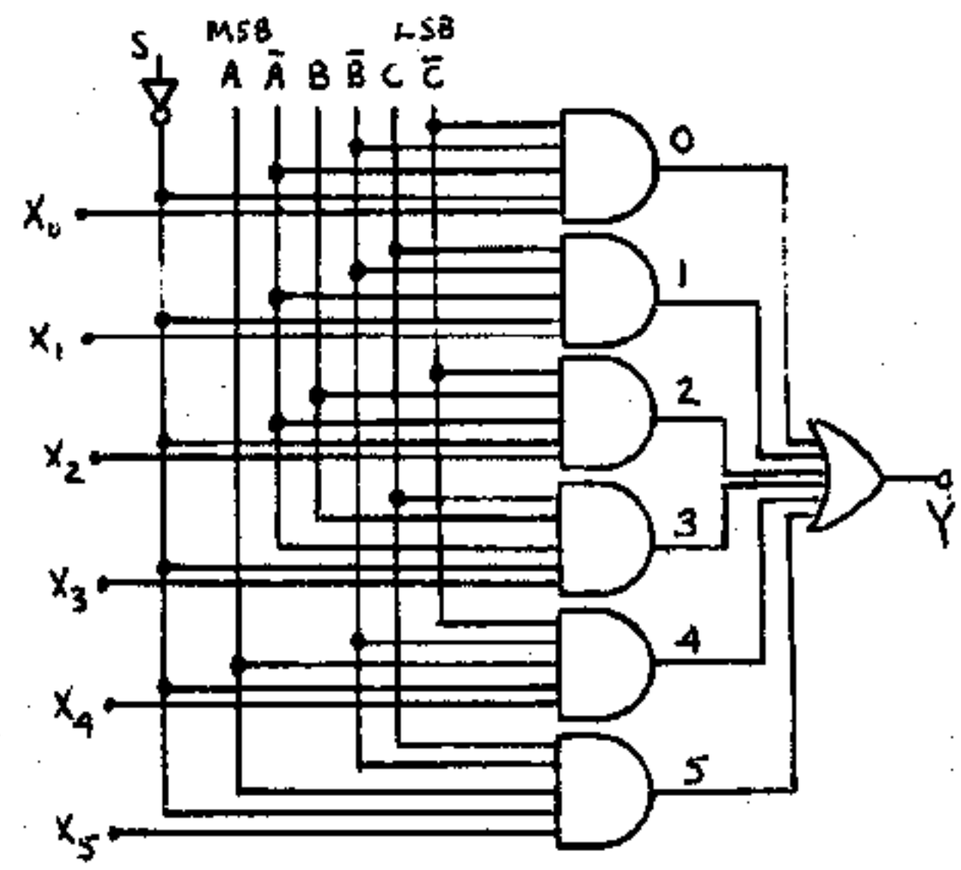

(b) Add two more AND gates and two more inputs to the OR gate, as follows

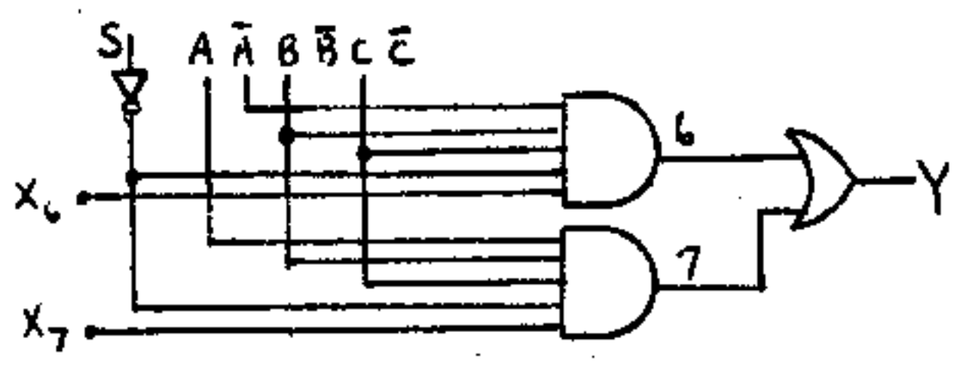

6-21

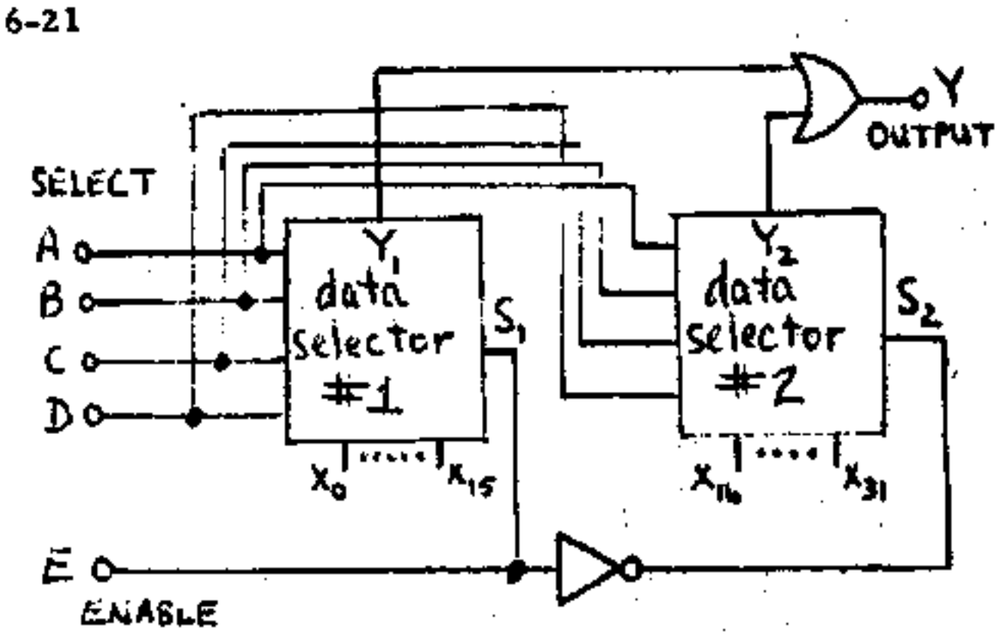

The inputs E, D, C, B, A form the 5 bit code. When E = 0 we get a word ODCBA, i.e. a number between 0→15. When E = 1 we get word 1DCBA, i.e. the numbers between 16→31

when E = 0 $S_1=0$ and $Y_1=X_j$; $S_2=1$ and $Y_2=0$
$(0 \le j \le 15)$
then $Y = 0 + X_j = X_j$

when E=1 $S_1=1$ and $Y_1=0$; $S_2=0$ and $Y_2=X_j$
$(16 \le j \le 31)$
then $Y = X_j$.

6-22

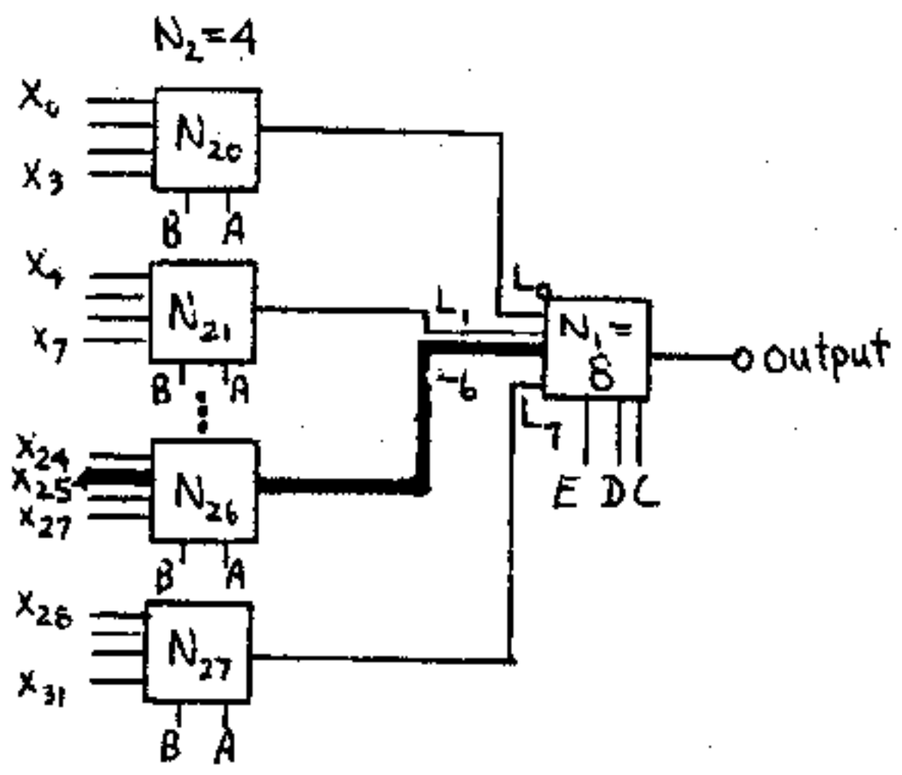

(a) Line 25 is selected by having EDC = 110 and BA = 01 (see heavy lines); thus EDCBA = $(11001)_2 = 25_{10}$.

(b) We need one 8 line-to-1 chip and eight 4 line-to-1 units (which are on four chips) for a total of 5 chips.

6-23

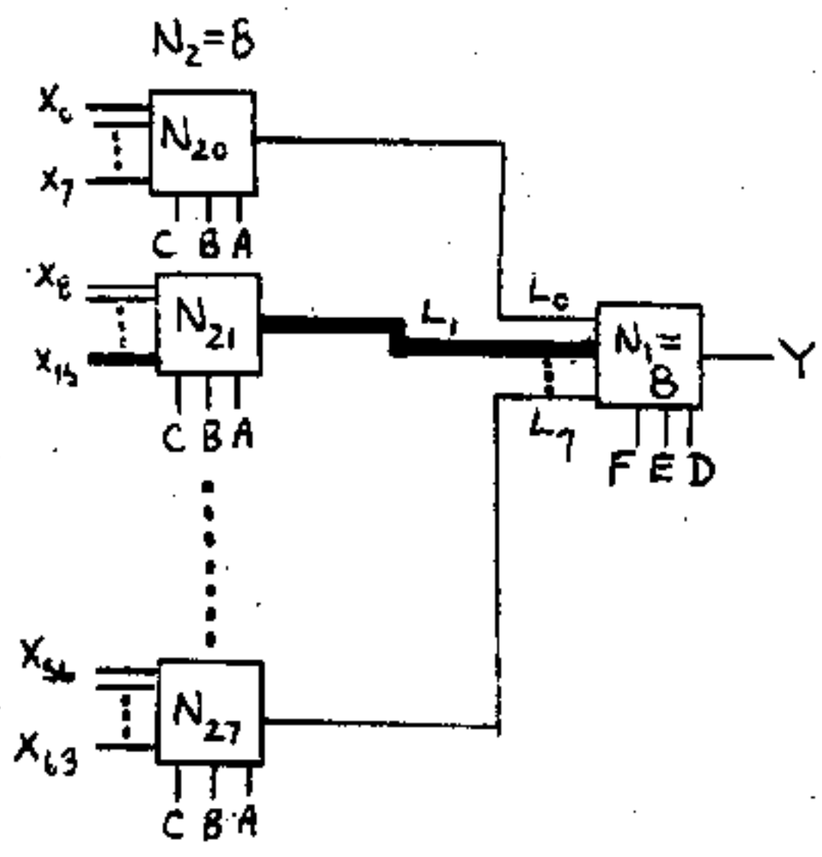

(a) Notice, for example, that X_{15} is selected by FED=001 and CBA=111 (heavy lines); thus FEDCBA = $(001111)_2 = (15)_{10}$.

(b) Here we need 8 + 1 = 9 identical 8 line-to-1 chips.

6-24

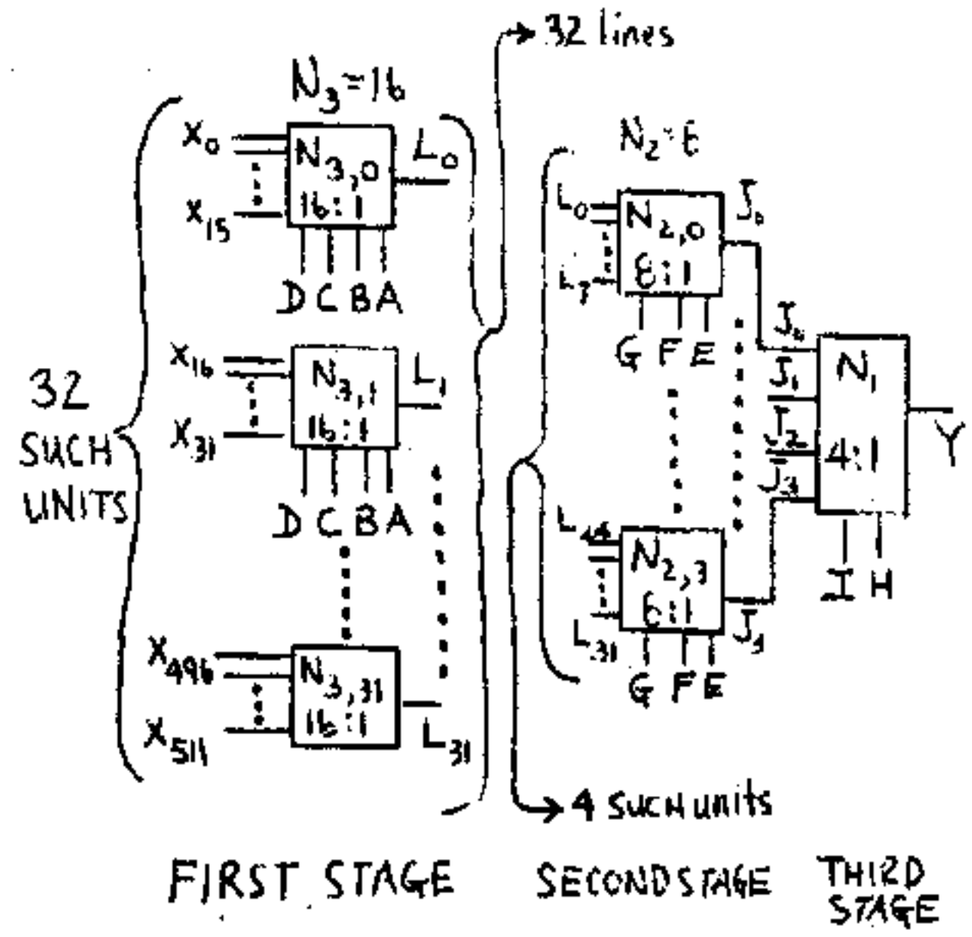

(b) We need 32 16:1 line packages, 4 8:1 line packages, and half 8:1 line package (one 4:1 line) for a total of $36\frac{1}{2}$.

(c) Here the first stage contains 32 16:1 packages, the second stage contains 2 16:1 ones, and the third stage is 1/2 8:1 package for a total of $34\frac{1}{2}$.

6-25 (a) We need a 4-1-line multiplexer. For a 4-to-1 multiplexer $Y = X_0\overline{B}\overline{A} + X_1\overline{B}A + X_2B\overline{A} + X_3BA$ Eq.(6-15)

$S_n = \overline{A}\overline{B}C + \overline{A}B\overline{C} + A\overline{B}\overline{C} + ABC$ Eq. (6-1) with the subscripts dropped

Rearranging: $Y = S_n = C\overline{B}\overline{A} + \overline{C}\overline{B}A + \overline{C}B\overline{A} + CBA$

comparing this equation with Eq. (6-15), we get

$X_0 = C,\ X_1 = \overline{C},\ X_2 = \overline{C},\ X_3 = C$

(b) Eq. (6-2) without the subscripts is

$Y = \overline{A}BC + A\overline{B}C + AB\overline{C} + ABC = C\overline{B}A + CB\overline{A} + (\overline{C}+C)BA$

Comparing with Eq. (6-15) we get

$X_0 = 0,\ X_1 = C,\ X_2 = C,\ X_3 = \overline{C}+C = 1$

(c) No, two different multiplexers must be used since different values for the X's are obtained in the two cases above.

6-26 A 2^{N-1} input multiplexer is required where N=4 corresponding to the 4 variables A, B, C and D. Hence 2^3=8 data inputs are needed.

1st Method: The standard form of the output of an 8-input multiplexer is

$$Y=X_0\overline{C}\overline{B}\overline{A}+X_1\overline{C}\overline{B}A+X_2\overline{C}B\overline{A}+X_3\overline{C}BA+X_4C\overline{B}\overline{A}$$
$$+X_5C\overline{B}A+X_6CB\overline{A}+X_7CBA$$

comparing this with the given equation

$$Y=\overline{D}\overline{C}\overline{B}\overline{A}+D\overline{C}\overline{B}A+D\overline{C}B\overline{A}+\overline{D}\overline{C}B\overline{A}+DC\overline{B}\overline{A}$$
$$+\overline{D}C\overline{B}A+DCB\overline{A}+\overline{D}CB\overline{A}$$

we get

$X_0=\overline{D}$, $X_1=D$, $X_2=D+\overline{D}=1$, $X_3=0$, $X_4=D$
$X_5=\overline{D}$, $X_6=D+\overline{D}=1$, $X_7=0$

<u>2nd Method:</u> It is not necessary to write the standard sum of product equation. Instead note that:

$\overline{C}\overline{B}\overline{A}\rightarrow 0 \therefore X_0=\overline{D}$; $\overline{C}\overline{B}A\rightarrow 1 \therefore X_1=D$
$\overline{C}B\overline{A}\rightarrow 2 \therefore X_2=D+\overline{D}=1$; $C\overline{B}\overline{A}\rightarrow 4 \therefore X_4=D$
$C\overline{B}A\rightarrow 5 \therefore X_5=\overline{D}$; $CB\overline{A}\rightarrow 6 \therefore X_6=D+\overline{D}=1$

The missing terms mean that the corresponding X's are zero $\therefore X_3=X_7=0$

6-27 If all four inputs are 1 then three inputs are certainly 1. Hence form all combinations of three inputs

$$Y=CBA+DBA+DCA+DCB$$

(b) Use an 8-to-1 multiplexer with address CBA and data X. All terms must contain A, B, C or the complements of these variables. Hence

$$Y=CBA+DBA(C+\overline{C})+DCA(B+\overline{B})+DCB(A+\overline{A})$$
$$=CBA+DCBA+D\overline{C}BA+DCBA+DC\overline{B}A+DCBA+DCB\overline{A}$$

Since $DCBA+DCBA+DCBA=DCBA$ and $CBA(1+D)=CBA$

$$Y=CBA+D\overline{C}BA+DC\overline{B}A+DCB\overline{A}$$

Since $CBA\rightarrow 7$ $\quad X_7=1$
$\overline{C}BA\rightarrow 3$ $\quad X_3=D$
$C\overline{B}A\rightarrow 5$ $\quad X_5=D$
$CB\overline{A}\rightarrow 6$ $\quad X_6=D$

All other X's are 0

6-28 From the truth-table we have:

$Y_0=W_0+W_2+W_3$
$Y_1=W_1+W_3$
$Y_2=W_1+W_2$
$Y_3=W_0+W_1+W_3$

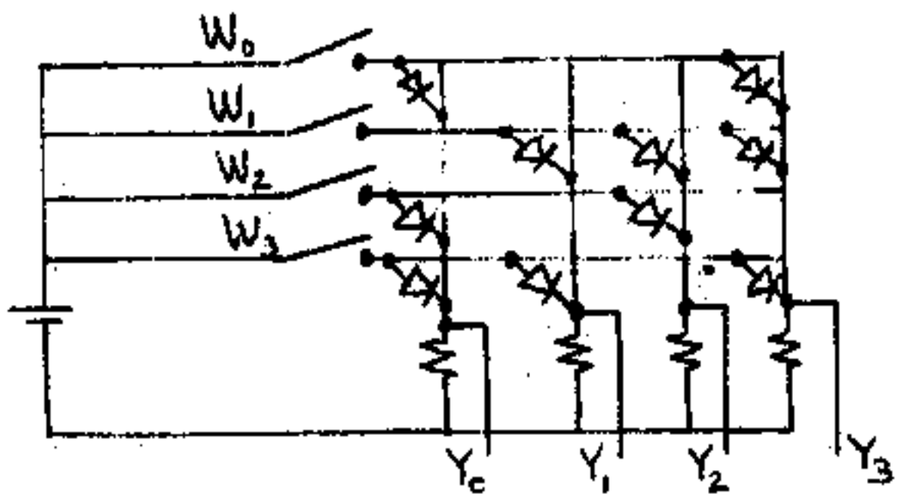

6-29 (a) $Y_0=W_2$
$Y_1=W_0+W_2$
$Y_2=W_0+W_1$
$Y_3=W_1+W_2$
$Y_4=W_0+W_1=Y_2$

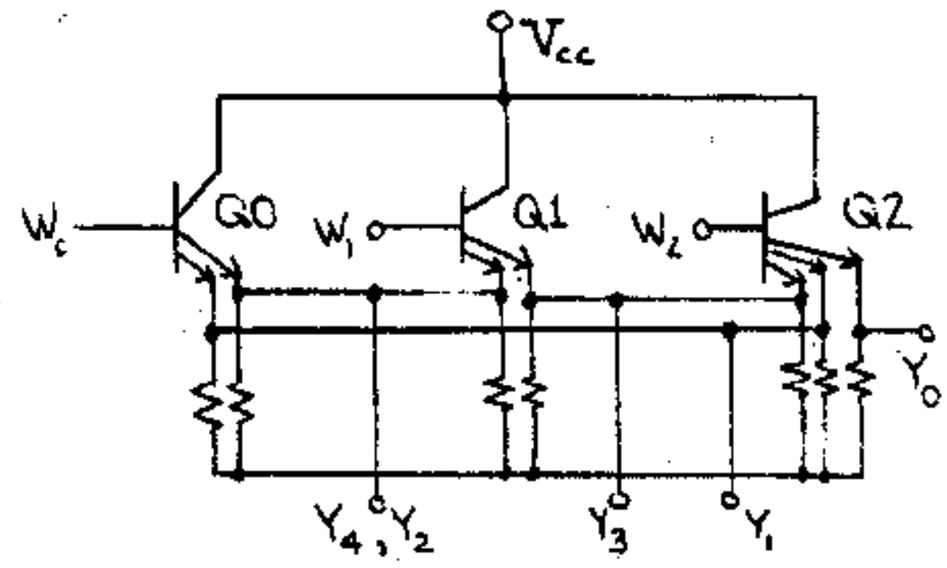

(b) Since we have 3 words, we must use 3 transistors, with inputs W_0, W_1 and W_2, where Q0 has 2 emitters, Q1 has 2 emitters and Q2 has 3 emitters.

6-30 (a) Using A for the LSB, $Y_5=101=C\overline{B}A$. Hence we must construct a positive AND gate as in Fig. 5-5b.

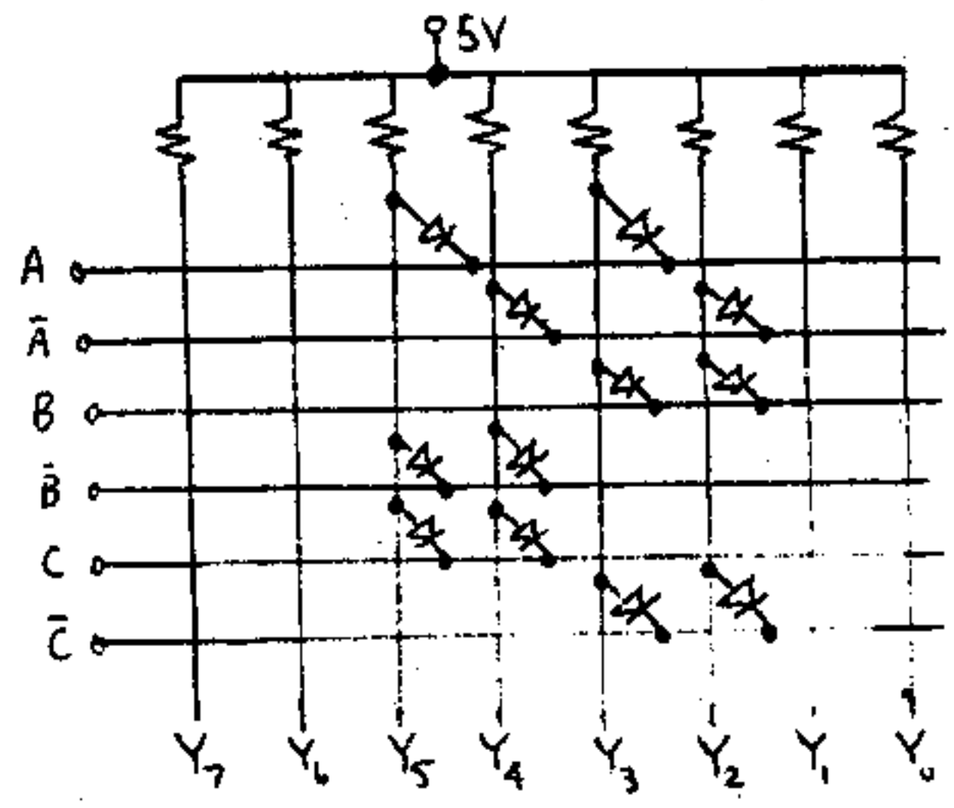

(b) $Y_2=010=\overline{C}B\overline{A}$, $Y_3=011=\overline{C}BA$, $Y_4=100=C\overline{B}\overline{A}$ with the above connections when the input is 010(=2), Y_2 is ON; when the input is 011(=3), Y_3 is ON etc.

6-31 (a) From Table 6-3 we get

$$Y_3=W_8\overline{W}_9+W_9$$
$$=W_8+W_9$$

where use is made of Eq. (5-19).

(b) From Table 6-3 we get

$$Y_2=W_4\overline{W}_5\overline{W}_6\overline{W}_7\overline{W}_8\overline{W}_9+W_5\overline{W}_6\overline{W}_7\overline{W}_8\overline{W}_9$$
$$+W_6\overline{W}_7\overline{W}_8\overline{W}_9+W_7\overline{W}_8\overline{W}_9$$
$$=\overline{W}_8\overline{W}_9(W_4\overline{W}_5\overline{W}_6\overline{W}_7+W_5\overline{W}_6\overline{W}_7+W_6\overline{W}_7+W_7)$$

using Eq. (5-19) $A\overline{B}+B=A+B$ with $B=W_7$ and $A=W_4\overline{W}_5\overline{W}_6+W_5\overline{W}_6+W_6$ we get

$$Y_2=\overline{W}_8\overline{W}_9(W_4\overline{W}_5\overline{W}_6+W_5\overline{W}_6+W_6+W_7)$$

similarly with $B=W_6$ and $A=W_4\overline{W}_5+W_5$ we get $Y_2=\overline{W}_8\overline{W}_9(W_4\overline{W}_5+W_5+W_6+W_7)$. Again applying Eq. (5-19) with $B=W_5$

$Y_2=(\overline{W_8+W_9})(W_4+W_5+W_6+W_7)$ by De Morgan's law.

6-32 From Table 6-3 we get

$$Y_0=W_9+W_7\overline{W}_8\overline{W}_9+W_5\overline{W}_6\overline{W}_7\overline{W}_8\overline{W}_9$$
$$+W_3\overline{W}_4\overline{W}_5\overline{W}_6\overline{W}_7\overline{W}_8\overline{W}_9$$
$$+W_1\overline{W}_2\overline{W}_3\overline{W}_4\overline{W}_5\overline{W}_6\overline{W}_7\overline{W}_8\overline{W}_9$$

using Eq. (5-19) $A\overline{B}+B=A+B$ with $B=W_9$

$$Y_0=W_9+W_7\overline{W}_8+W_5\overline{W}_6\overline{W}_7\overline{W}_8+W_3\overline{W}_4\overline{W}_5\overline{W}_6\overline{W}_7\overline{W}_8$$
$$+W_1\overline{W}_2\overline{W}_3\overline{W}_4\overline{W}_5\overline{W}_6\overline{W}_7\overline{W}_8$$
$$=W_9+\overline{W}_8(W_7+W_5\overline{W}_6\overline{W}_7+W_3\overline{W}_4\overline{W}_5\overline{W}_6\overline{W}_7$$
$$+W_1\overline{W}_2\overline{W}_3\overline{W}_4\overline{W}_5\overline{W}_6\overline{W}_7)$$

Using Eq. (5-19) with $B=W_7$

$$Y_0=W_9+\overline{W}_8(W_7+W_5\overline{W}_6+W_3\overline{W}_4\overline{W}_5\overline{W}_6$$
$$+W_1\overline{W}_2\overline{W}_3\overline{W}_4\overline{W}_5\overline{W}_6)$$
$$=W_9+\overline{W}_8[W_7+\overline{W}_6(W_5+W_3\overline{W}_4\overline{W}_5+W_1\overline{W}_2\overline{W}_3\overline{W}_4\overline{W}_5)]$$

Using Eq. (5-19) with $B=W_5$

$$Y_0=W_9+\overline{W}_8[W_7+W_5\overline{W}_6+\overline{W}_4\overline{W}_6(W_3+W_1\overline{W}_2\overline{W}_3)]$$

Using Eq. (5-19) with $B=W_3$

$$Y_0=W_9+\overline{W}_8(W_7+W_5\overline{W}_6+W_3\overline{W}_4\overline{W}_6+W_1\overline{W}_2\overline{W}_4\overline{W}_6)$$

6-33 a)

W_7	W_6	W_5	W_4	W_3	W_2	W_1	W_0	Y_2	Y_1	Y_0
0	0	0	0	0	0	0	1	0	0	0
0	0	0	0	0	0	1	x	0	0	1
0	0	0	0	0	1	x	x	0	1	0
0	0	0	0	1	x	x	x	0	1	1
0	0	0	1	x	x	x	x	1	0	0
0	0	1	x	x	x	x	x	1	0	1
0	1	x	x	x	x	x	x	1	1	0
1	x	x	x	x	x	x	x	1	1	1

b) From the above table

$$Y_0=W_7+W_5\overline{W}_6\overline{W}_7+W_3\overline{W}_4\overline{W}_5\overline{W}_6\overline{W}_7$$
$$+W_1\overline{W}_2\overline{W}_3\overline{W}_4\overline{W}_5\overline{W}_6\overline{W}_7$$

Using Eq. (5-19) with $B=W_7$

$$Y_0=W_7+\overline{W}_6(W_5+W_3\overline{W}_4\overline{W}_5+W_1\overline{W}_2\overline{W}_3\overline{W}_4\overline{W}_5)$$

Using Eq. (5-19) with $B=W_5$

$$Y_0=W_7+\overline{W}_6(W_5+W_3\overline{W}_4+W_1\overline{W}_2\overline{W}_3\overline{W}_4)$$

Using Eq. (5-19) with $B=W_3$

$$=W_7+W_5\overline{W}_6+W_3\overline{W}_4\overline{W}_6+W_1\overline{W}_2\overline{W}_4\overline{W}_6$$

6-34 The truth Table is in Prob. 6-33 from this table

$$Y_1=W_7+W_6\overline{W}_7+W_3\overline{W}_4\overline{W}_5\overline{W}_6\overline{W}_7+W_2\overline{W}_3\overline{W}_4\overline{W}_5\overline{W}_6\overline{W}_7$$
$$Y_1=W_7+\overline{W}_7[W_6+\overline{W}_6(W_3\overline{W}_4\overline{W}_5+W_2\overline{W}_3\overline{W}_4\overline{W}_5)]$$

Using $A+\overline{A}B=A+B$; where $A=W_7$

$$Y_1=W_7+W_6+\overline{W}_6(W_3\overline{W}_4\overline{W}_5+W_2\overline{W}_3\overline{W}_4\overline{W}_5)$$

Using Eq. (5-19) with $B=W_6$

$$Y_1=W_7+W_6+\overline{W}_4\overline{W}_5(W_3+W_2\overline{W}_3)$$

Using Eq. (5-19) with $B=W_3$

$$Y_1=W_7+W_6+\overline{W}_4\overline{W}_5(W_3+W_2)$$
$$=W_7+W_6+W_3\overline{W}_4\overline{W}_5+W_2\overline{W}_4\overline{W}_5$$

6-35 (a) $W_0=\overline{X}_1\overline{X}_0$, $W_1=\overline{X}_1X_0$, $W_2=X_1\overline{X}_0$, $W_3=X_1X_0$

$Y_0=W_0+W_1+W_2$; $Y_1=W_0+W_2$; $Y_2=W_1+W_2+W_3$

$Y_3=W_0+W_3$

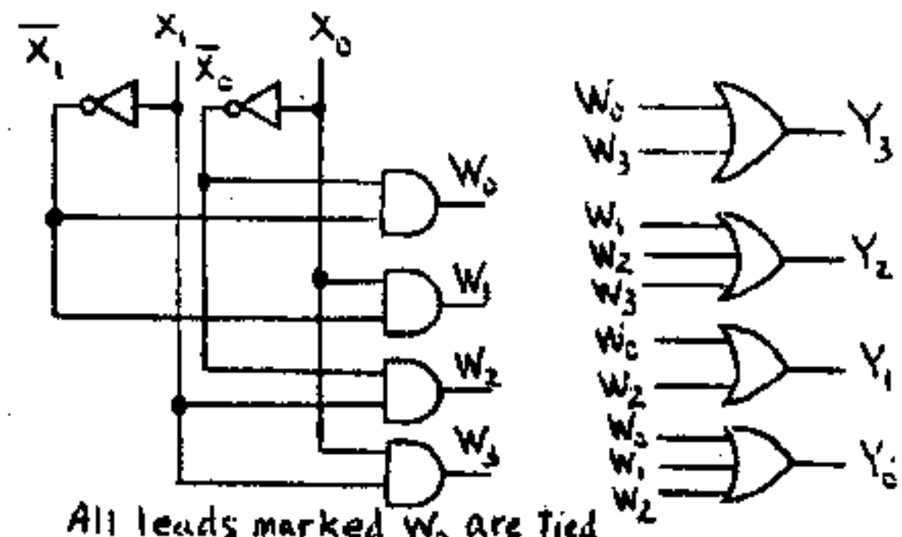

All leads marked W_0 are tied together, etc.

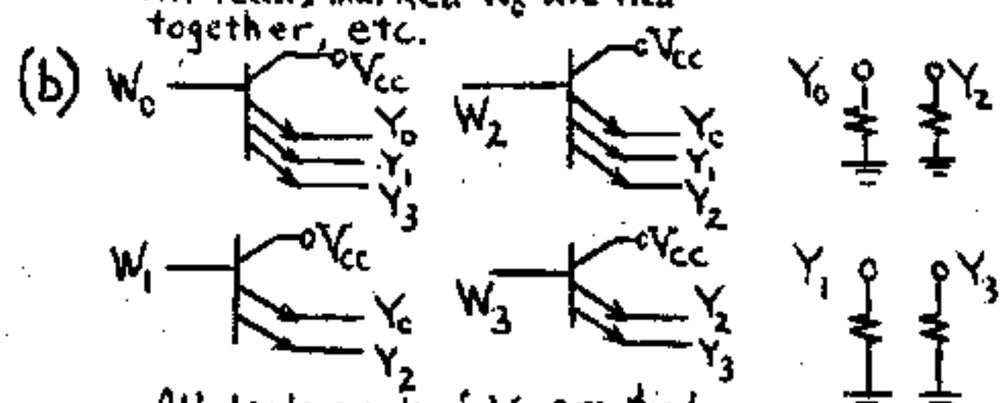

All leads marked Y_0 are tied together, etc.

6-36 (a)

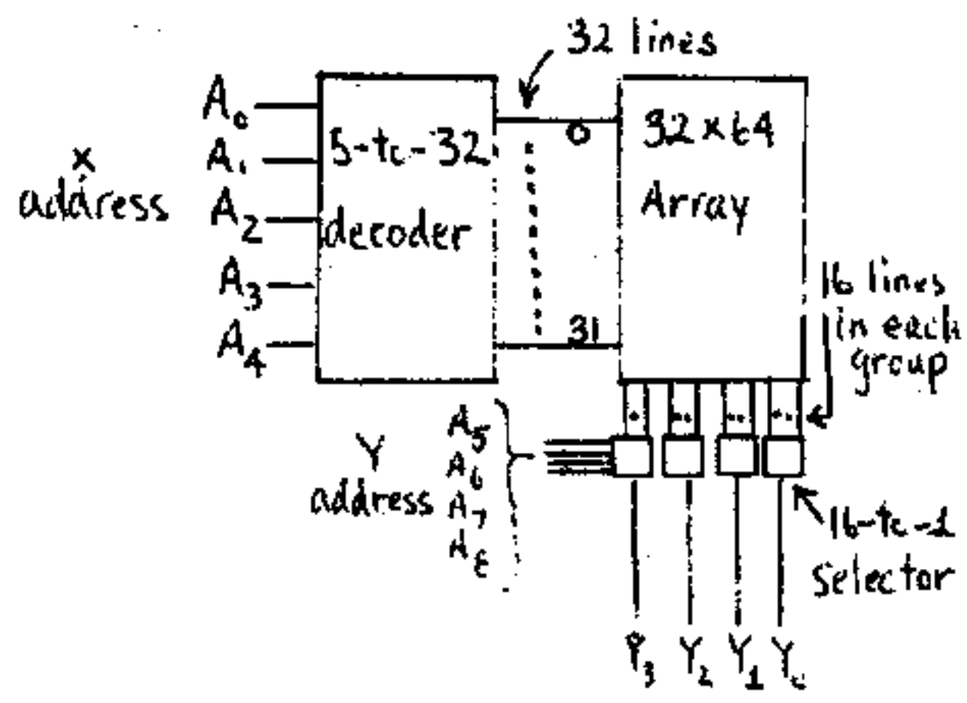

(b) 32 Nand gates in the decoder $(16+1)4=68$ Nand gates in the selectors

∴ Totally there are $68+32=100$ Nand gates.

(c) We require 32 transistors, each with a maximum of 64 emitters.

6-37 (a) Since there are 256 addresses, we need 8 bits in the address ($2^8=256$) to be able to address the ROM.

(b) Since there are 8 outputs (8 bits) and each output comes from an 8-to-1 selector, there must be totally 8 x 8 = 64 vertical lines.

$\therefore$ no. of horizontal lines $= \frac{256 \times 8}{64} = 32$

Hence we need 5 bits to address 32 horizontal lines (using a 5-to-32 decoder)

(c) We have one 5-to-32 decoder with 32 Nand gates, and 8 selectors (8-to-1) which have 8+1 Nand gates each

$\therefore$ totally we have $32+(8+1)8 = 32+72 = 104$ Nand gates.

(d) The ROM is an array of 32 horizontal lines and 64 vertical lines. Hence we need 32 transistors each with a maximum of 64 emitters.

6-38 (a) From Table 6-4 we get

$Y_0=W_1+W_2+W_5+W_6+W_9+W_{10}+W_{13}+W_{14}$

$Y_2=W_4+W_5+W_6+W_7+W_8+W_9+W_{10}+W_{11}$

where

$W_1=\bar{X}_3\bar{X}_2\bar{X}_1X_0$ $W_2+\bar{X}_3\bar{X}_2X_1\bar{X}_0$ $W_4=\bar{X}_3X_2\bar{X}_1\bar{X}_0$

$W_5=\bar{X}_3X_2\bar{X}_1X_0$ $W_6=\bar{X}_3X_2X_1\bar{X}_0$ $W_7=\bar{X}_3X_2X_1X_0$

$W_8=X_3\bar{X}_2\bar{X}_1\bar{X}_0$ $W_9=X_3\bar{X}_2\bar{X}_1X_0$ $W_{10}=X_3\bar{X}_2X_1\bar{X}_0$

$W_{11}=X_3\bar{X}_2X_1X_0$ $W_{13}=X_3X_2\bar{X}_1X_0$ $W_{14}=X_3X_2X_1\bar{X}_0$

(b)

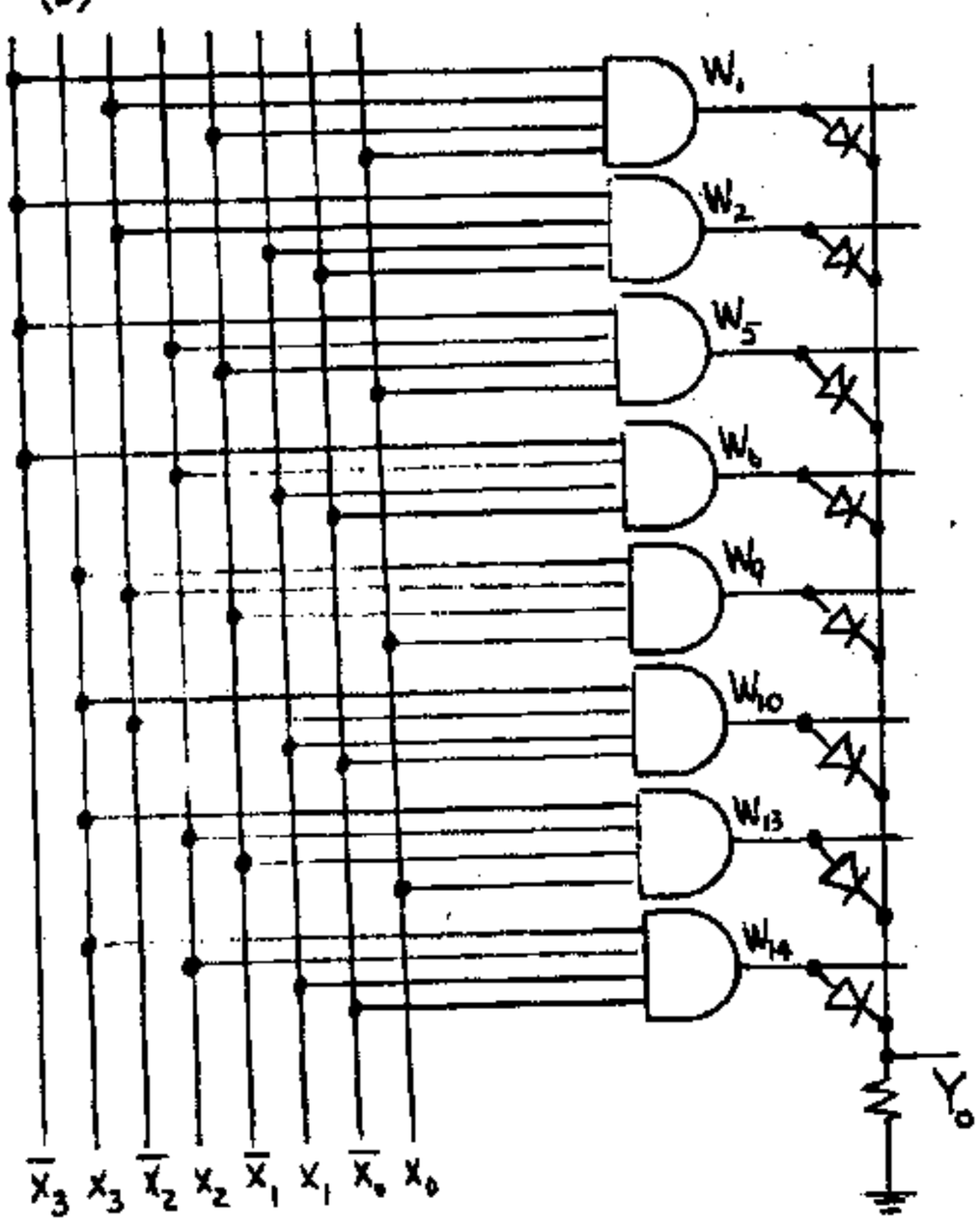

6-39 (a) $Y_3=W_8+W_9+W_{10}+W_{11}+W_{12}+W_{13}+W_{14}+W_{15}$

$Y_2=W_4+W_5+W_6+W_7+W_8+W_9+W_{10}+W_{11}$

where

$W_1=\bar{X}_3\bar{X}_2\bar{X}_1X_0$, $W_2=\bar{X}_3\bar{X}_2X_1\bar{X}_0$, $W_3=\bar{X}_3\bar{X}_2X_1X_0$,

$W_4=\bar{X}_3X_2\bar{X}_1\bar{X}_0$, $W_5=\bar{X}_3X_2\bar{X}_1X_0$, $W_6=\bar{X}_3X_2X_1\bar{X}_0$,

$W_7=\bar{X}_3X_2X_1X_0$, $W_8=X_3\bar{X}_2\bar{X}_1\bar{X}_0$, $W_9=X_3\bar{X}_2\bar{X}_1X_0$,

$W_{10}=X_3\bar{X}_2X_1\bar{X}_0$, $W_{11}=X_3\bar{X}_2X_1X_0$, $W_{12}=X_3X_2\bar{X}_1\bar{X}_0$,

$W_{13}=X_3X_2\bar{X}_1X_0$, $W_{14}=X_3X_2X_1\bar{X}_0$, $W_{15}=X_3X_2X_1X_0$.

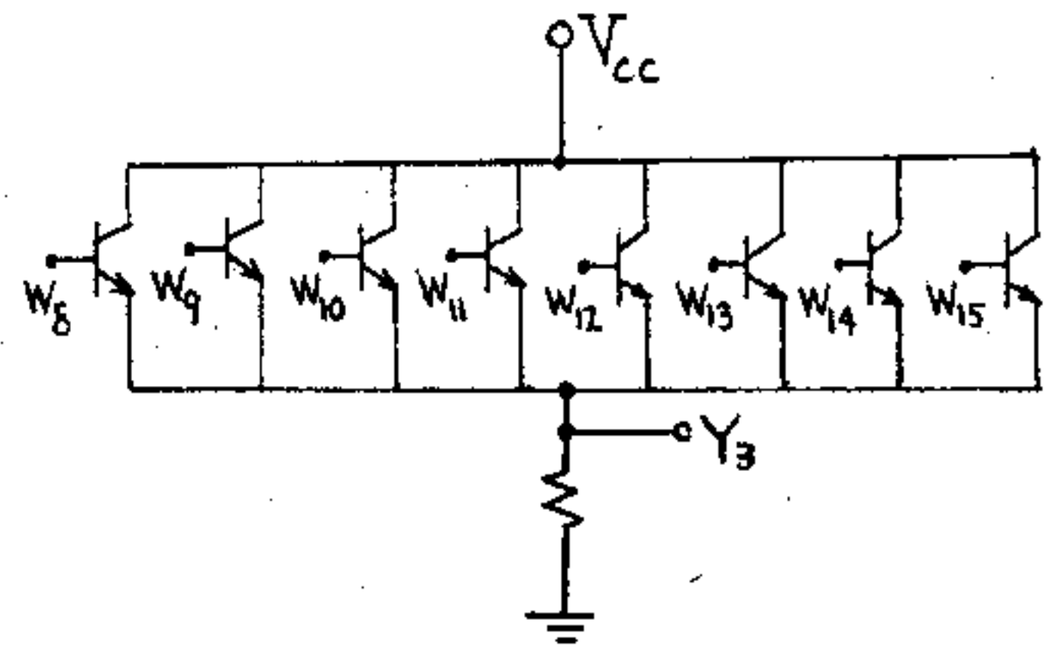

where W_i are the outputs of the AND gates above.

6-40 (a) From Table 6-5 we get for Y_5

$Y_5=W_1+W_2+W_3+W_7+W_{10}+W_{11}+W_{15}$

$= \bar{D}\bar{C}\bar{B}A+\bar{D}\bar{C}B\bar{A}+\bar{D}\bar{C}BA+\bar{D}CBA+D\bar{C}B\bar{A}+D\bar{C}BA+DCBA$

(b) Rewriting the above and noting that $\bar{D}\bar{C}B\bar{A}$ $=\bar{D}\bar{C}BA+\bar{D}\bar{C}BA$

$Y_5=(\bar{D}\bar{C}\bar{B}A+\bar{D}\bar{C}BA)+(\bar{D}\bar{C}B\bar{A}+D\bar{C}B\bar{A})$
$+(\bar{D}\bar{C}BA+\bar{D}CBA+D\bar{C}BA+DCBA)$

$=(\bar{D}\bar{C}\bar{A}(\bar{B}+B))+(\bar{C}B\bar{A}(\bar{D}+D))+(\bar{D}BA(\bar{C}+C)+DBA(\bar{C}+C))$

Since $X+\bar{X}=1$

$Y_5=\bar{D}\bar{C}\bar{A}+\bar{C}B\bar{A}+\bar{D}BA+DBA$

$=\bar{D}\bar{C}\bar{A}+\bar{C}B\bar{A}+BA(\bar{D}+D)$

$=\bar{D}\bar{C}\bar{A}+\bar{C}B\bar{A}+BA$

6-41 Since $DCB\bar{A}=DCB\bar{A}+DCB\bar{A}$ then

$Y_0=\bar{D}\bar{C}BA+\bar{D}CB\bar{A}+\bar{D}CB\bar{A}+D\bar{C}B\bar{A}+D\bar{C}BA+DCBA$
$+DC\bar{B}\bar{A}+DCB\bar{A}(+DCB\bar{A})=$
$=\bar{D}\bar{C}BA+C\bar{B}\bar{A}+D\bar{C}B+DCB+CB\bar{A}=$
$=\bar{D}\bar{C}BA+C\bar{A}+DB$

CHAPTER 7

7-1 (a) Assume $Q = \bar{Q} = 1$ in Fig. 7-1a. Then because of the feedback $A_1 = A_2 = 1$ and hence $Q = Q = 0$, thus contradicting the assumption that $Q = \bar{Q} = 1$ in the stable state.

Similarly if $Q = \bar{Q} = 0$, then $A_1 = A_2 = 0$ and hence $Q = \bar{Q} = 1$. Thus we conclude that Q and $\bar{Q}$ cannot both be in the same state.

(b) If both B_1 and B_2 are at 0 in Fig. 7-1b, then the outputs of N1 and N2 (Q and $\bar{Q}$) will be 1 irrespective of the previous values of Q and $\bar{Q}$. Having $Q = \bar{Q} = 1$ is inconsistent with the definition of the latch and hence $B_1 = B_2 = 0$ is not allowed.

7-2 With the key in position 1 in Fig. 7-2 the output is $Q = 1$ and $\bar{Q} = 1$ as explained in the text. When the switch is depressed B_1 goes to 5 V as shown. B_2 falls to 0 after time t_2 (the time to move the switch $= t_2' - t_1'$) and then the voltage at B_2 may rise and fall as shown as the switch chatters.

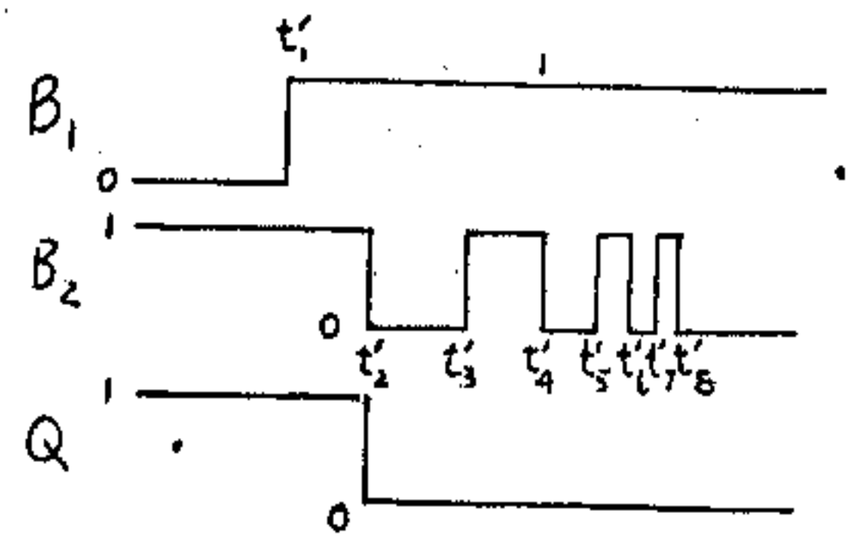

Between t_1' and t_2', $B_1 = B_2 = 1$, hence the output remains the same as before the switch was depressed, i.e. $Q = 1$. At $t_2'+$, $B_1 = 1$ and $B_2 = 0$ hence $Q = 0$.

When the switch chatters after t_2, either $B_1 = 1$ and $B_2 = 0$ (between t_2' and t_3' or t_4' and t_5' or t_6' and t_7') or $B_1 = 1$ and $B_2 = 1$ (between t_3' and t_4' and t_5' and t_6' or t_7' and t_8'). In both cases $Q = 0$, which is the correct output.

7-3 (a) If $G = 0$, the outputs of N3 and N4 are 0. Thus, N5 and N6 are uneffected by D. Hence, Q retains the information it has independent of changes in D. Now let $G = 1$. If $D = 1$, then $S = 1$, $R = 0$, $P_1 = 1$ and $P_2 = 0$. Since $P_1 = 1$, $\bar{Q}$ must $= 0$. Thus, the input and output of $N_2 = 0$ and since both inputs to N6 are 0, Q must $= 1$. Similarly, if $D = 0$, $Q = 0$

(b) The enable, G, and the INVERTER to the left of S and R are not changed. The rest of the circuit is modified in 3 steps:

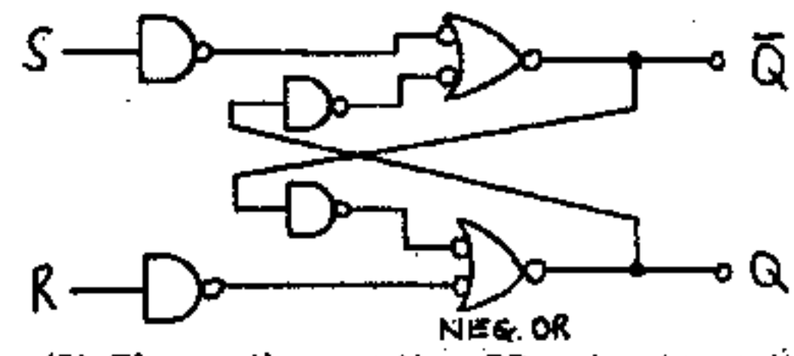

(2) Change the negative OR gates to positive AND gates

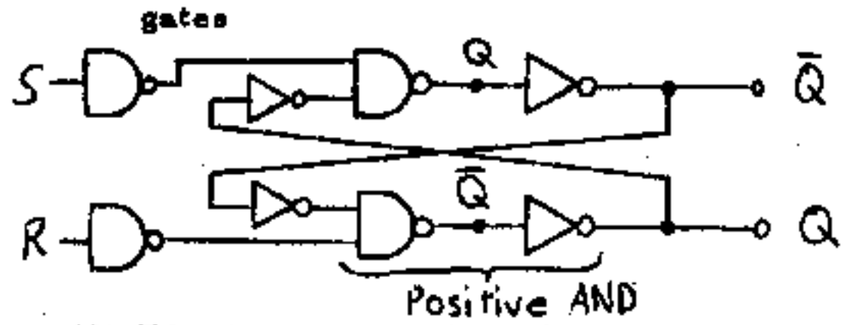

(3) The two cascaded NOT gates cancel each other.

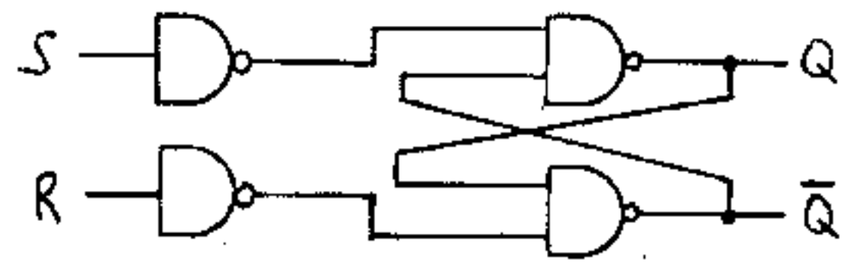

The above is Fig 7-3 if the enable, G, and the input D circuit are added.

7-4 Notice, from Fig. 7-3, that

$$Q = \overline{B_1 \bar{Q}} = \overline{(\overline{SG})(\overline{Q B_2})} = SG + Q B_2, \text{ or}$$

$$\bar{Q} = \overline{SG + Q B_2} \quad \text{which is in AOI form with}$$

$$B_2 = \overline{GR}$$

Similarly, $Q = \overline{GR + B_1 \bar{Q}}$ with $B_1 = \overline{SG}$

These equations are implemented in the Fig. below:

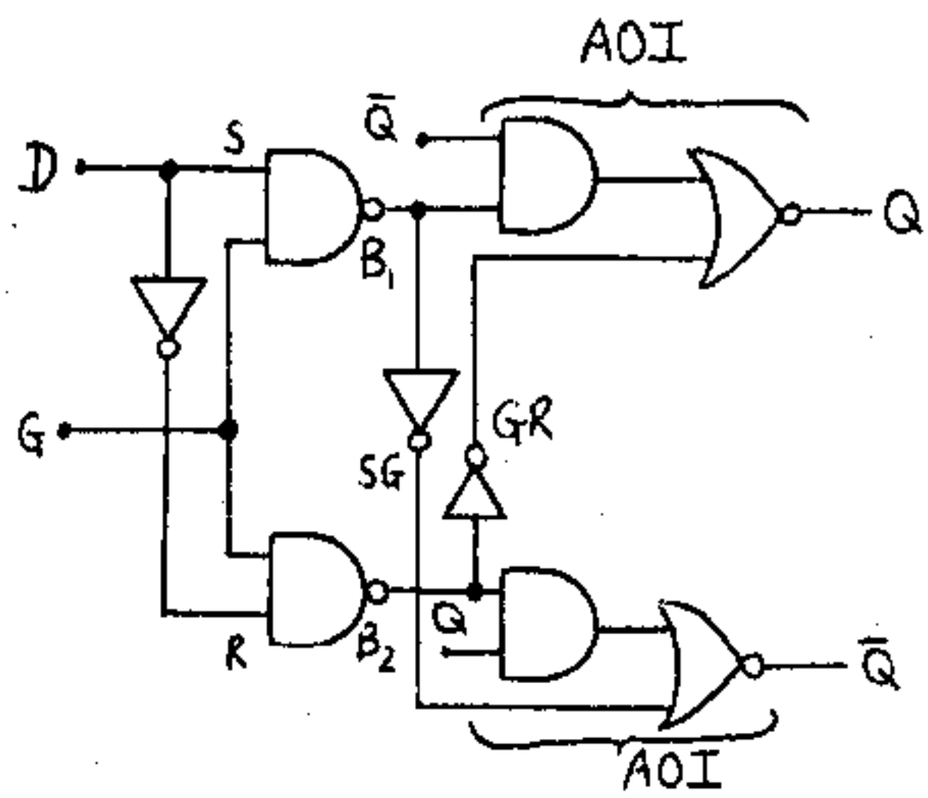

7-5 From truth table of Table 7-1 and Fig. 7-6

$0 \to 0$ ($Q_n = Q_{n+1} = 0$) Row 1: $J_n = 0$, $K_n = 0$; Row 5: $J_n = 0$, $K_n = 1$ } $J_n = 0$, $K_n = X$ (a)

$0 \to 1$ ($Q_n = 0, Q_{n+1} = 0$) Row 3: $J_n = 1$, $K_n = 0$; Row 7: $J_n = 1$, $K_n = 1$ } $J_n = 1$, $K_n = X$ (b)

$1 \to 0$ ($Q_n = 1, Q_{n+1} = 0$) Row 6: $J_n = 0$, $K_n = 1$; Row 8: $J_n = 1$, $K_n = 1$ } $J_n = X$, $K_n = 1$ (c)

$1 \to 1$ ($Q_n = 1, Q_{n+1} = 1$) Row 2: $J_n = 0$, $K_n = 0$; Row 4: $J_n = 1$, $K_n = 0$ } $J_n = X$, $K_n = 0$ (d)

from a, b, c, d the table is verified.

7-6 From Table 7-1, $Q_{n+1}=1$ in rows 2 and 4, or

$$Q_{n+1}=\underbrace{\bar{Q}_n J_n(K_n+\bar{K}_n)}_{\text{row 2}}+\underbrace{Q_n\bar{K}_n(J_n+\bar{J}_n)}_{\text{row 4}}$$

hence $Q_{n+1}=\bar{Q}_n J_n+Q_n\bar{K}_n$ since $(K_n+\bar{K}_n)$ and $(J_n+\bar{J}_n)=1$

7-7

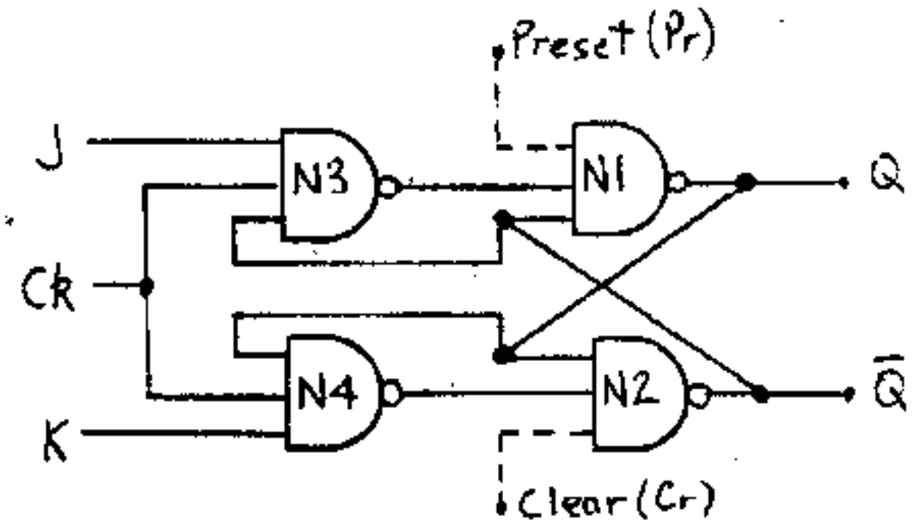

(a) When $P_r=0$ and $C_r=1$, $Q=1$. For correct operation $Q=1$ and $\bar{Q}=0$, hence all the inputs to N2 must be 1. Since $Q=1$ and $C_r=1$ we need to ensure that $Y=1$.

Now $Y=1$ means $\bar{K}+\overline{Ck}+\bar{Q}=1$ (i.e. at least one of K, Ck and Q must be 0). Since $Q=1$, then $Y=1 \Rightarrow \bar{K}+\overline{Ck}=1$ Thus if $\bar{K}+\overline{Ck}=1$ the FF will preset correctly.

(b) When $P_r=1$ and $C_r=0$, $\bar{Q}=1$. For correct operation $\bar{Q}=1$ and $Q=0$, and similarly as above we need to ensure that $x=1$ or $\bar{Q}+\bar{J}+\overline{Ck}=1$ or since $\bar{Q}=1$, $\bar{J}+\overline{Ck}=1$.

(c) If $Ck=C_r=P_r=0$ since both Q and $\bar{Q}$ want to go to the 1 state, the final stable state will be determined by the device characteristics.

(d) Take $P_r=C_r=Ck=1$. Then $Q=\overline{P_r X\bar{Q}}=\overline{1X\bar{Q}}=\overline{X\bar{Q}}$

and $\bar{Q}=\overline{C_r Y Q}=\overline{YQ}$ where $X=\overline{JCk\bar{Q}}=\overline{J\bar{Q}}$ and

$Y=\overline{KCkQ}=\overline{KQ}$. These are the same Equations that characterize Fig. 7-6 with X and Y replaced by $\bar{S}$ and $\bar{R}$, respectively. Hence the FF is enabled.

7-8 From Table 7-1

(a) For $J_n=K_n=0$ and $Q_n=0$, $Q_{n+1}=0$. Since $Q_{n+1}=Q_n$ there is no change in the feedback circuit and hence no race around difficulty.

For $J_n=K_n=0$ and $Q_n=1$, $Q_{n+1}=1$; again $Q_{n+1}=Q_n$ and there is no race around difficulty.

For $J_n=1$, $K_n=0$ and $Q_n=0$, $Q_{n+1}=1$; If Ck = 1 after this change has taken place, then from row 4 of the table we get $J_n=1$, $K_n=0$, $Q_n=1 \Rightarrow Q_{n+1}=1$ and since this does not change the output ($Q_{n+1}=1$) there is no race around difficulty.

For $J_n=1$, $K_n=0$ and $Q_n=1$, $Q_{n+1}=1$ and there is no race around difficulty.

For $J_n=0$, $K_n=1$ and $Q_n=1$, $Q_{n+1}=0$; but again from row 6 of Table 7-1 we get $Q_{n+1}=0$ and there is no race around difficulty.

For $J_n=0$, $K_n=1$ and $Q_n=0$, $Q_{n+1}=0$ and no race around difficulty exists.

Thus except for $J_n=K_n=1$ as explained in the text there is no race around difficulty.

(b) Take $J_n=K_n=1$, $Q_n=0$. According to Table 7-1 Q will become 1 when the next clock pulse comes in. Now, if $\Delta t > t_p$, Q will be 0 throughout the clock pulse.

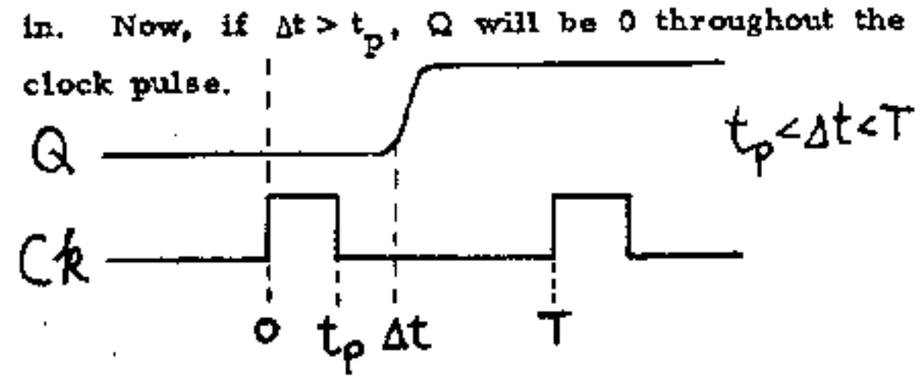

When Ck = 0 again, the FF is locked with Q = 1 and it doesn't change state again. Thus the race-around condition has been eliminated. Δt must be smaller than T, so that Q changes state before the next clock pulse.

7-9 (a)

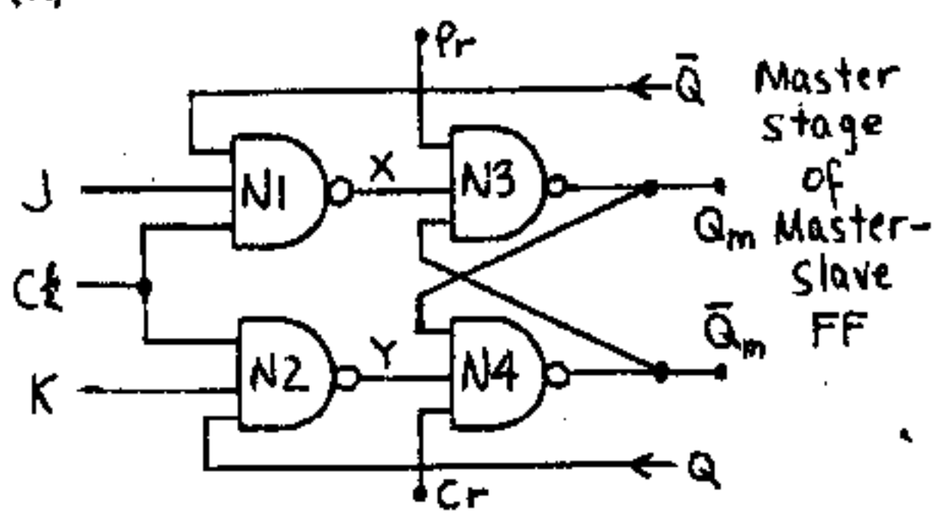

Since $Q=0$, Q_M must have been 0 during the time when the clock was 0, for proper operation of the Flip-Flop. Hence $Q_M=0$ at the instant when C_k becomes 1.

Since $Q_M=0$ the output of N_4 $(\bar{Q}_M)=1$. Since $J=0$, the output of N1(x)=1. Since $Q_M=1$ the output of N3 $(Q_M)=0$. Thus $Q_M=0$ and $\bar{Q}_M=1$ and they are stable.

(b) Now J=1 and since $\bar{Q}=C_k=1$, $x=0$. Since $\bar{Q}_M=1$ from part (a) the output of $N3=Q_M=1$. $Y=1$ as $Q=0$ and hence the output of $N4=\bar{Q}_M=0$ and the circuit is stable $\therefore$ $Q_M=1$ and $\bar{Q}_M=0$

(c) If J=0 now X=1 while Y=1 as in part (b). But $\bar{Q}_M=0$ from part (b) and hence the output of $N3=Q_M=1$ and the output of $N4=\bar{Q}_M=0$. Hence the same state is maintained as in part (b).

7-10

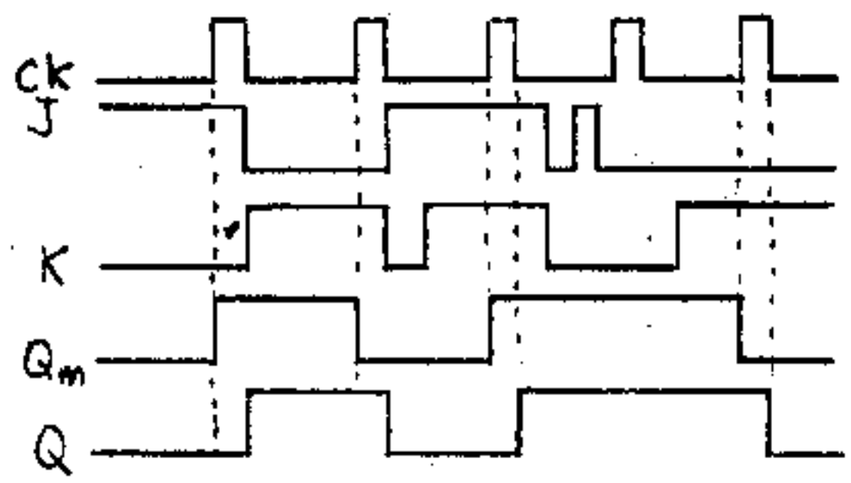

7-11 (a)

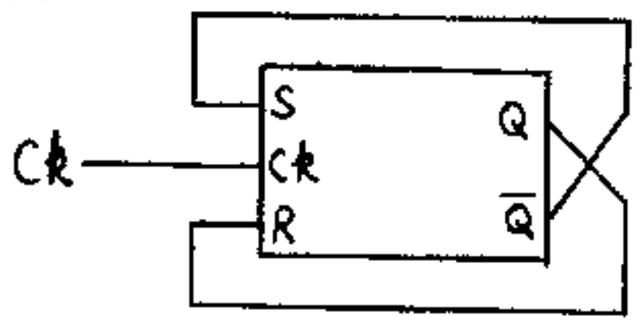

Consider the truth table of Fig. 7-5b for an S-R Flip-Flop. Since S and R can take only complementary values (as they are connected to Q and $\bar{Q}$ respectively) only the combinations of row 2 and 3 are applicable. When $R_n=1$, $Q_{n+1}=0$ and when $R_n=0$, $Q_{n+1}=1$. But since $R=Q$, $Q_{n+1}=\bar{Q}_n$ in both cases, which is the behavior for a toggle Flip-Flop.

(b) A D-type Flip-Flop behaves according to the equation $Q_{n+1}=D_n$. If $D_n=\bar{Q}_n$ then $Q_{n+1}=\bar{Q}_n$ (T-type)

7-12 We append the table, as shown below, with the J and K columns based on Fig. 7-6b.

A	B	Q_{n+1}	J	K
0	0	$\bar{Q}_n$	1	1
0	1	1	1	0
1	0	Q_n	0	0
1	1	0	0	1

From the above table it can be seen that:

$J = \bar{A}\bar{B} + \bar{A}B = \bar{A}(B+\bar{B}) = \bar{A}$ and

$K = \bar{A}\bar{B} + AB$

Hence the AB-Flip-Flop is built using a J-K Flip-Flop as follows:

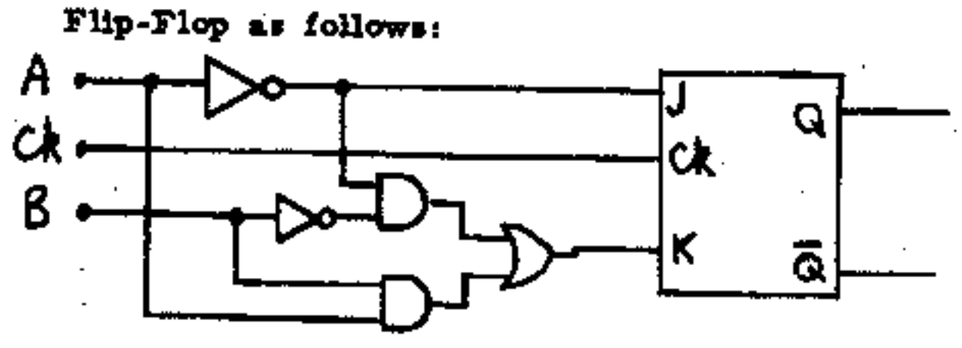

7-13 (a) Note that if any input to a NOR gate is a 1, then the output is zero. Thus, the output of Y_o is zero because one of its inputs is $\bar{Q}_o$ which is 1 since $D_o=0$. $Y_1=0$ because one of its inputs is $\bar{Q}_1$ which is 1 since $D_1=0$. Similarly, $Y_3=0$ because one of its inputs is $\bar{Q}_3$ which is 1 since $D_3=0$. $Y_2=1$ because its inputs are $Q_0=0$, $Q_1=0$, $\bar{Q}_2=0$ and $P_0=0$ since $D_0=D_1=P_0=0$ and $D_2=1$. Thus, $Y_2=1$ and all other outputs $=0$.

(b) The inputs to Y_2 are $Q_0, Q_1, \bar{Q}_2$ and P_0. $Q_0=0$ since $D_0=0$. $Q_1=0$ since $D_1=0$. $\bar{Q}_2=0$ since $D_2=1$. Thus, all inputs to Y_2 are $=0$ and $Y_2=1$.

(c) The general formula for Y_n is, by inspecting the Figure,

$$Y_n=\overline{P_0+\bar{Q}_n+Q_{n-1}+Q_{n-2}+Q_{n-3}} \qquad (1).$$

with $Q_{-1}=Q_{-2}=Q_{n-3}=0$.

Since $Q_k=D_k$ and Y_n is 0 if any of the terms in Eq. (1) is 1 we see that only the lowest order data D_k among those in the high state is transferred to make $Y_k=1$.

(d) The system will work as understood for the first four bits. Thus, if any of D_0, D_1, D_2 or D_3 is one, then $P_1=0$ and P_0 for the higher order chip will be 1. Hence, Y_4, Y_5, Y_6, Y_7 and P_1 for the higher order chip are zero. If D_0, D_1, D_2 and D_3 all are zero, then $P_1=1$ and P_0 for the higher order chip$=0$. Thus the higher order chip will work as understood for the last four bits.

7-14 (a) $S_0=S_1=1$: Note immediately that the AND gates with shift right (and left) serial inputs are inhibited, whereas the ones with the parallel inputs A, B, C, and D are enabled. It is clear that of the triplet of AND gates that "feed" each NOR gate (whose outputs are the R terminals) only the one with the parallel inputs is enabled. See Fig. below. Thus data are entered in parallel when $S_0=S_1=1$.

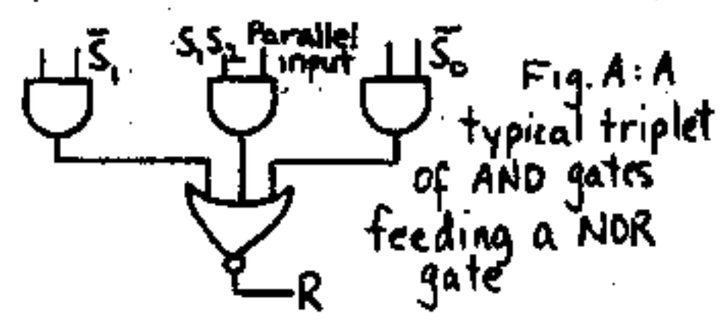

(b) $S_0=1, S_1=0$: Notice now that only the left AND gate in each triplet of Fig. A above is enabled. Thus data enter serially from the "SHIFT RIGHT SERIAL" input into the leftmost FF. Observe that its output QA is fed (through the leftmost AND gate of the second triplet) into the NOR gate which complements it and then feeds $\overline{QA}$ into the R of the second FF. This is equivalent to feeding QA into the S terminal. Similarly for the rest of the FF's. This arrangment, however, is precisely equivalent to Fig. 7-11 in the text. Hence serial shifting to the right has been achieved.

(c) The arguments here are quite similar to those in part (b), the two cases being mirror images of each other.

7-15 (a)

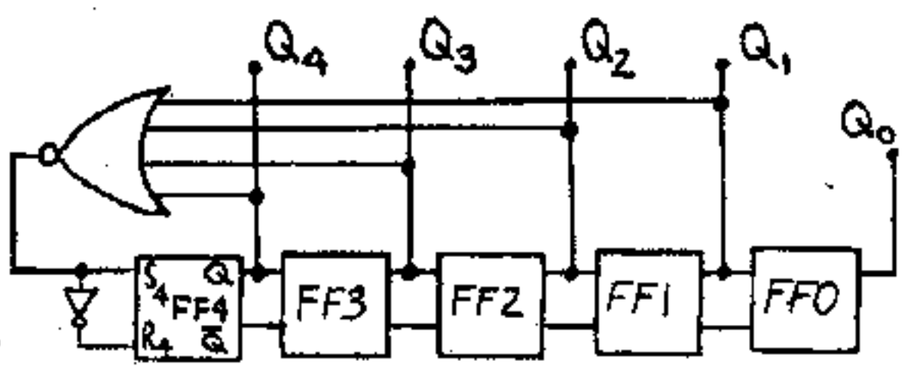

The output of the NOR gate is zero as long as one of the Q_1, Q_2, Q_3, Q_4 are non-zero. Therefore, it will take at most 4 pulses to clear FF4, FF3, FF2, FF1. When they all get cleared, the output of the NOR gate becomes 1. This 1 is propagated through the chain of FF's and after 5 pulses it appears at Q_0. When Q_0 becomes 1, all other Q's are = 0, therefore output of NOR=1 and so at the next pulses Q4 = 1. Again, this 1 will need 4 more pulses to propagate through the chain and appear at Q_0. Therefore, the above system acts like a 5:1 scaler.

(b)

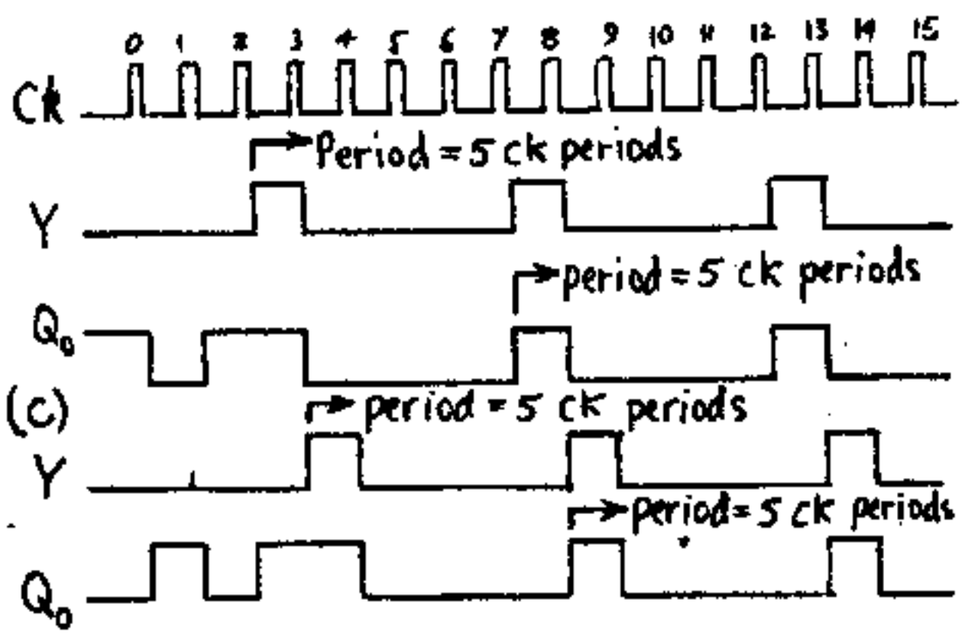

7-16 (a)

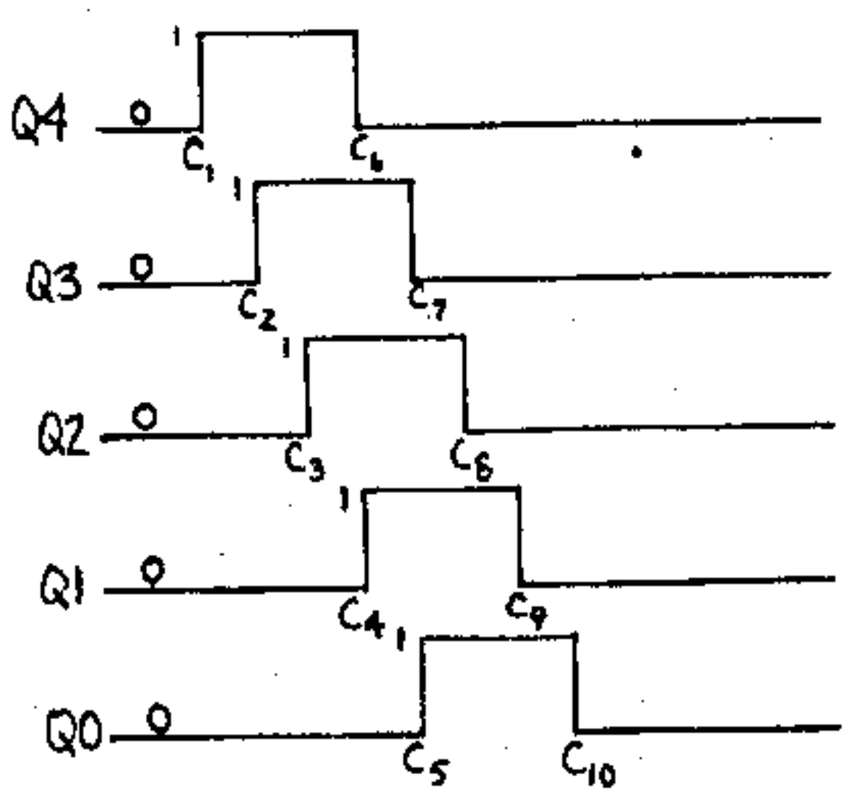

(b) and (c)

	S_0	R_0	S_1	R_1	S_2	R_2	S_3	R_3	S_4	R_4	Q_0	Q_1	Q_2	Q_3	Q_4	Decode with
before pulse 1	0	1	0	1	0	1	0	1	1	0	0	0	0	0	0	
after " 1	0	1	0	1	0	1	1	0	1	0	0	0	0	0	1	$Q_4\bar{Q}_3$
" " 2	0	1	0	1	1	0	1	0	1	0	0	0	0	1	1	$Q_3\bar{Q}_2$
" " 3	0	1	1	0	1	0	1	0	1	0	0	0	1	1	1	$Q_2\bar{Q}_1$
" " 4	1	0	1	0	1	0	1	0	1	0	0	1	1	1	1	$Q_1\bar{Q}_0$
" " 5	1	0	1	0	1	0	1	0	0	1	1	1	1	1	1	Q_0Q_4
" " 6	1	0	1	0	1	0	0	1	0	1	1	1	1	1	0	$\bar{Q}_4Q_3$
" " 7	1	0	1	0	0	1	0	1	0	1	1	1	1	0	0	$\bar{Q}_3Q_2$
" " 8	1	0	0	1	0	1	0	1	0	1	1	1	0	0	0	$\bar{Q}_2Q_1$
" " 9	0	1	0	1	0	1	0	1	0	1	1	0	0	0	0	$\bar{Q}_1Q_0$
" " 10	0	1	0	1	0	1	0	1	1	0	0	0	0	0	0	$\bar{Q}_0\bar{Q}_4$

and Q_4 is to change next to 1, and so on.

7-17 (a)

	Q_0	Q_1	Q_2	$J_2=\bar{Q}_1$	$K_2=Q_2$
before 1st pulse	0	0	1	1	0
after 1st pulse	0	1	1	0	0
" 2nd "	1	1	1	0	1
" 3rd "	1	1	0	0	1
" 4th "	1	0	0	1	1
" 5th "	0	0	1	1	0

After the 5th pulse we get the output we had before the 1st pulse. Thus, the system operates as a divide by 5 counter.

(b)

	Q_0	Q_1	Q_2	$J_2=\bar{Q}_1$	$K_2=Q_0$
before 1st pulse	0	1	0	0	0
after 1st pulse	1	0	0	1	1
" 2nd "	0	0	1	1	0
" 3rd "	0	1	1	0	0
" 4th "	1	1	1	0	1
" 5th "	1	1	0	0	1
" 6th "	1	0	0	1	1

After the 1st pulse $(Q_0, Q_1, Q_2) = (1, 0, 0)$ which we get again after the 6th pulse. Thus, the system needs 1 pulse before it begins operating as a divide by 5 counter.

7-18 (a) Since $2^4 < 25 < 2^5$, we need five FLIP-FLOPs.

(b) We need two chips. Since $(25)_{10} = (11001)_2$, we construct the following circuit:

(c)

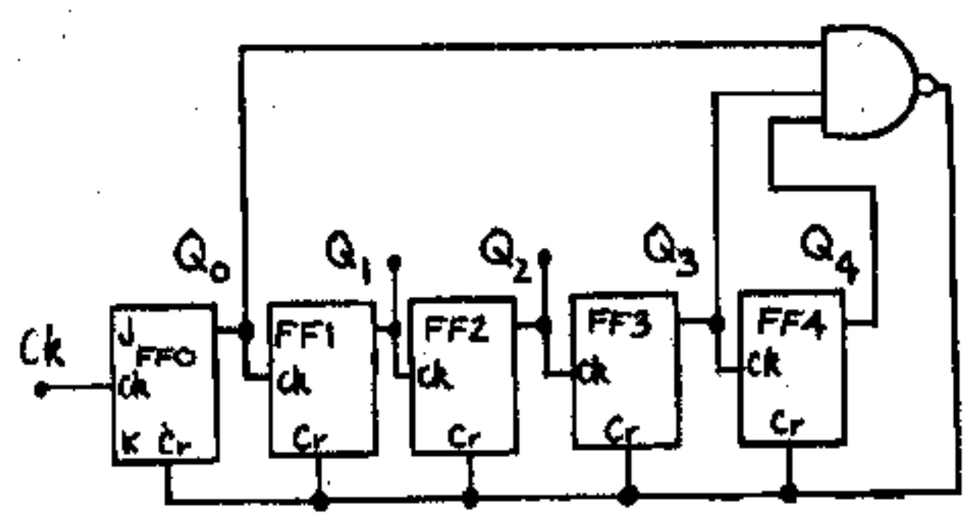

7-19 (a) Note that $(20)_{10} = (10100)_2$

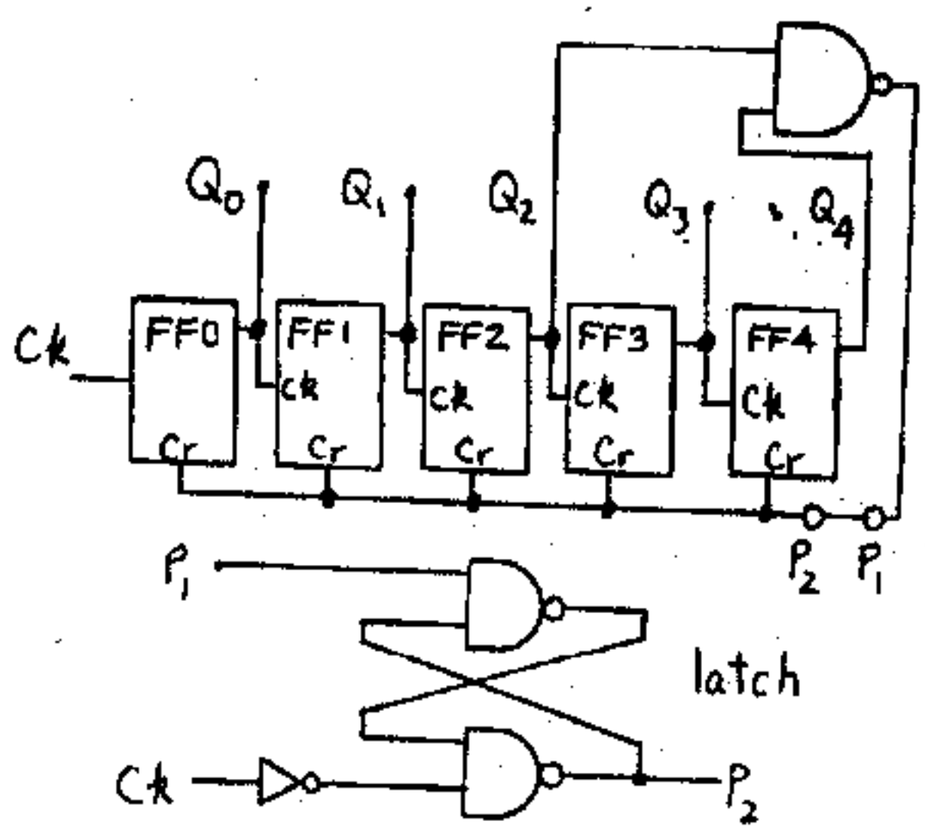

(b) $(125)_{10} = (1111101)_2$. Thus, the inputs to the feedback NAND gate are $Q_0, Q_2, Q_3, Q_4, Q_5, Q_6$.

7-20 (a) Immediately after the 10th pulse, $C_k = 0 \Rightarrow \overline{C}_k = 1$. Q_1 and Q_3 have both become $1 \Rightarrow P_1 = \overline{Q_1 Q_3} = 0$ $\Rightarrow P_2 = C_r = 0$.

(b) After 10th pulse and with Q_1 reset before Q_3, C_k remains 0 ($\overline{C}_k = 1$), $Q_1 = 0, Q_3 = 1 \Rightarrow P_1 = 1$. But X = output of N1 gate is 1 (since P_2 previous = 0) $\Rightarrow P_2 = \overline{X \cdot \overline{C}_k} = 0$.

(c) During eleventh pusle, $C_k = 1 \Rightarrow \overline{C}_k = 0 \Rightarrow P_2 = 1$ Q_1 and Q_3 are equal to $0 \Rightarrow P_1 = 1$.

(d) After 11th pulse $C_k = 0 \Rightarrow \overline{C}_k = 1$

$Q_1 = Q_3 = 0 \Rightarrow P_1 = 1 \Rightarrow X = 1$, but P_2 will keep = 1

	C_k	$\overline{C}_k$	Q_1	Q_3	P_1	$P_2 = C_r$	
(a)	0	1	1	1	0	0	latch sets
(b)	0	1	0	1	1	0	latch remains set
(c)	1	0	0	0	1	1	latch changes state
(d)	0	1	0	0	1	1	latch remains at previous state so that C_r remains 1 for normal count.

7-21 (a) Four FF's are needed since $2^3 < 11 < 2^4$. Since $(11)_{10} = (1011)_2$ the feedback comes from FF0, FF1, and FF3.

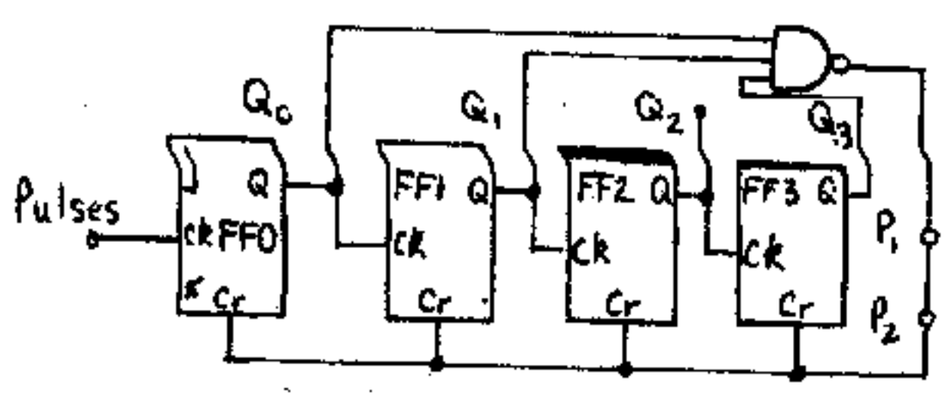

Note; all J=K=1, $P_r = 1$

(b)

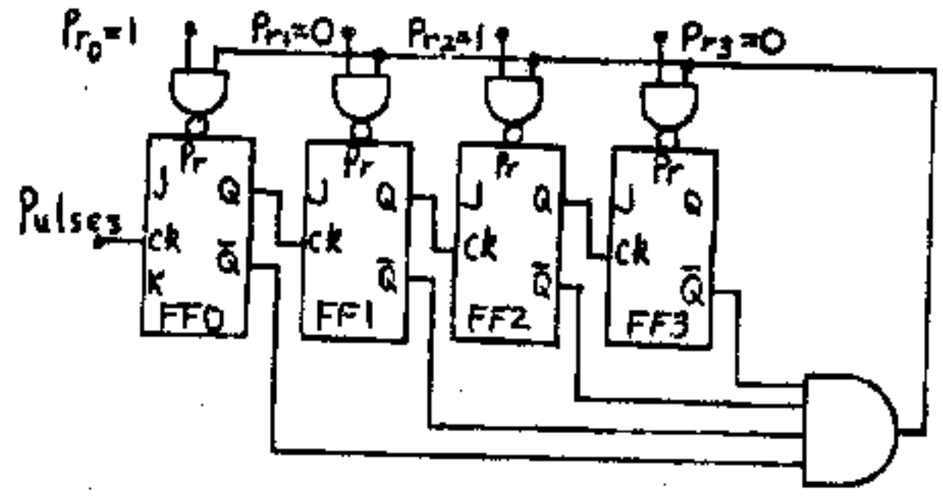

Note; all J=K=1, $C_r = 1$.

We preset the counter to 16-11=5 or $(0101)_2$.

Thus, $P_{r_0} = P_{r_2} = 1$ and $P_{r_1} = P_{r_3} = 0$.

7-22 (a)

	Q_3	Q_2	Q_1	Q_0
before 1st pulse	0	0	0	0
after 1st pulse	0	0	0	1
" 2nd "	0	0	1	0
" 3rd "	0	0	1	1
" 4th "	0	1	0	0
" 5th "	0	1	0	1
" 6th "	0	1	1	0
" 7th "	0	1	1	1
" 8th "	1	0	0	0
" 9th "	1	0	0	1
" 10th "	0	0	0	0

Notice that as the tenth pulse is applied, FF1 is disabled since $J_1 = \overline{Q}_3 = 0$. Thus we have a 10:1 counter.

(b) To obtain a 5:1 counter, disconnect Q_0 from the clock of FF1 and apply the clock pulses to this clock input.

7-23

clock pulses	Q_0	Q_3	Q_2	Q_1
before pulse 1	0	0	0	0
after pulse 1	0	0	0	1
" " 2	0	0	1	0
" " 3	0	0	1	1
" " 4	0	1	0	0
" " 5	1	0	0	0
" " 6	1	0	0	1
" " 7	1	0	1	0
" " 8	1	0	1	1
" " 9	1	1	0	0
" " 10	0	0	0	0

7-24 (a)

	Q_3	Q_2	Q_1	Q_0
before 1st pulse	0	0	0	0
after 1st pulse	0	0	0	1
" 2nd "	0	0	1	0
" 3rd "	0	0	1	1
" 4th "	0	1	0	0
" 5th "	0	1	0	1
" 6th "	1	0	0	0
" 7th "	1	0	0	1
" 8th "	1	0	1	0
" 9th "	1	0	1	1
" 10th "	1	1	0	0
" 11th "	1	1	0	1
" 12th "	0	0	0	0

Thus, we have 12:1 counter.

(b) For a 6:1 counter, disconnect Q_0 from the clock of FF1 and connect the clock pulses to this input.

7-25 (a) Initially, $Q_0=Q_1=0$ and $Q_2=Q_3=1$. Since 12 is preset into the counter, then after pulse 4 the count is 16 and all Q's are 0. Thus, all $\bar{Q}$'s are 1 and the preset enable is also at 1. Hence, the preset NAND gates which are programmed to 1 are excited. In this case FF2 and FF3 are preset to 0 so that 12 is again entered into the counter before the next pulse. The cycle then repeats and we have a divide-by-4 counter.

(b) If the propagation delay time for one preset is much smaller than for another, this will preset the first and the AND gate output goes to 0 and stops the presetting. Hence, a latch is needed to assure that all FLIP-FLOPs reset after count N.

(c) Program $P_{r_0}, P_{r_1}, P_{r_2}, P_{r_3}$ so that they read the two's complement of N or 2^n-N.

7-26

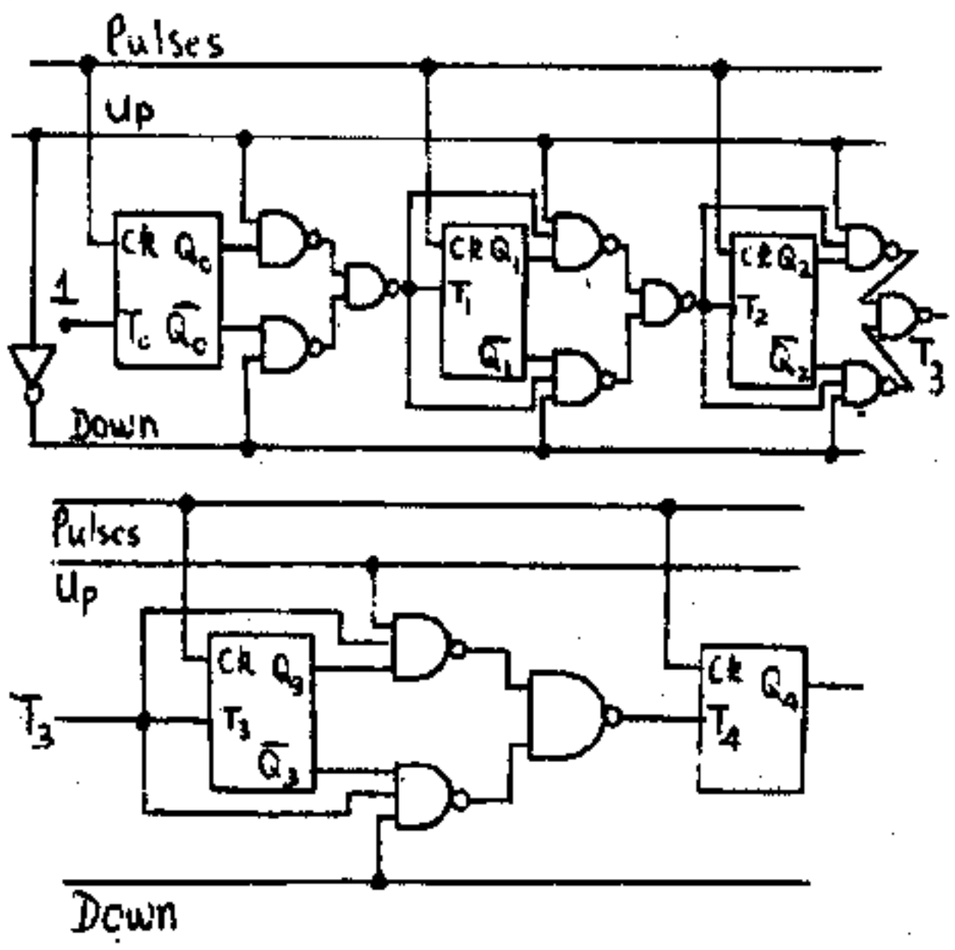

7-27

		$Q_0=J_1=\bar{K}_1$	$J_0=\bar{Q}_1$	Q_1
before	1st pulse	0	1	0
after	1st pulse	1	1	0
"	2nd "	0	0	1
"	3rd "	0	1	0

We started with $(Q_0, Q_1) = (0, 0)$ and reached the same output after 3 pulses. Thus, we have a 3:1 counter.

7-28 In the given circuit; $J_0=K_0=\bar{Q}_2$; $J_1=K_1=Q_0$; $J_2=Q_0Q_1$; $K_2=Q_2$.

	J_0	K_0	Q_0	J_1	K_1	Q_1	J_2	K_2	Q_2	$\bar{Q}_2$
before 1st pulse	1	1	0	0	0	0	0	0	0	1
after 1st pulse	1	1	1	1	1	0	0	0	0	1
" 2nd "	1	1	0	0	0	1	0	0	0	1
" 3rd "	1	1	1	1	1	1	1	0	0	1
" 4th "	0	0	0	0	0	0	0	1	1	0
" 5th "	1	1	0	0	0	0	0	0	0	1

We started with $(Q_0, Q_1Q_2) = (0, 0, 0)$ and we reached again the same output after 5 pulses. Thus the circuit behaves like a 5:1 counter.

7-29

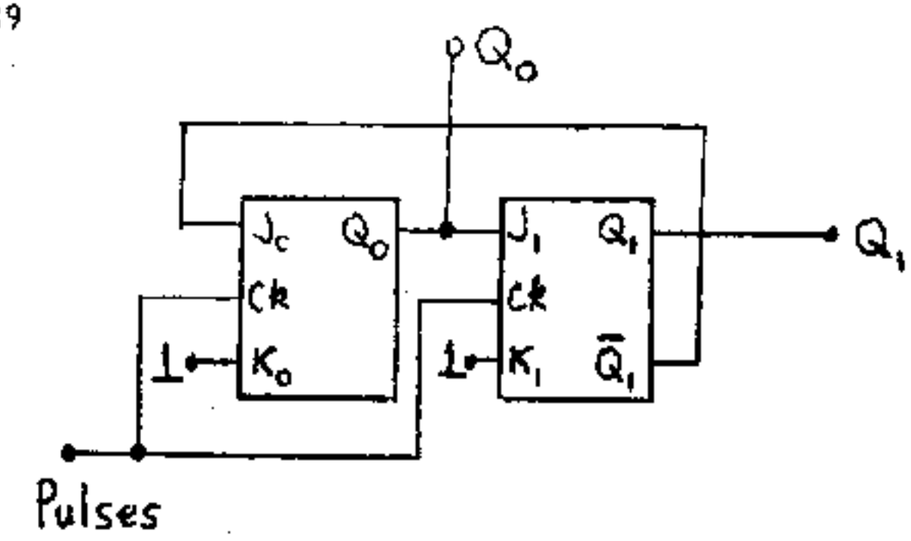

Here, $K_0=K_1=1$, $J_0=\bar{Q}_1$, $J_1=Q_0$

<u>Note:</u>

Since $K_n=1 \Rightarrow \begin{cases} \text{if } J_n=0 \Rightarrow Q_{n+1}=0 \\ \text{if } J_n=1 \Rightarrow Q_{n+1}=\bar{Q}_n \end{cases}$ for each FF

	J_0	Q_0	J_1	Q_1	$\bar{Q}_1$
before 1st pulse:	1	0	0	0	1
after 1st pulse	1	1	1	0	1
" 2nd "	0	0	0	1	0
" 3rd "	1	0	0	0	1

Having started with (0, 0), we reach the same state again after the 3rd pulse. Thus this is a 3:1 counter.

7-30

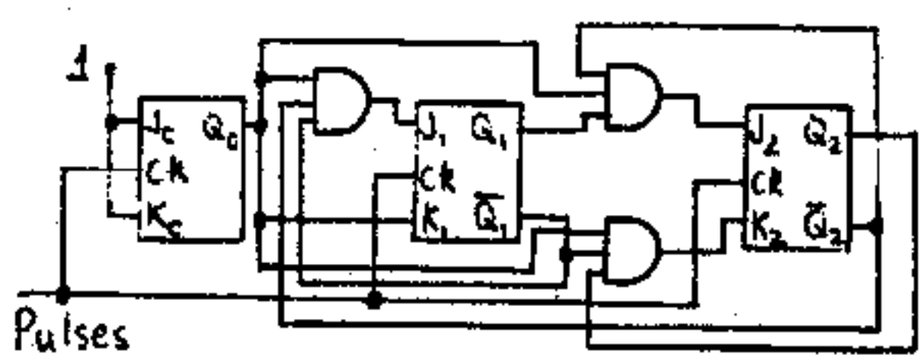

	J_0	K_0	Q_0	J_1	K_1	Q_1	J_2	K_2	Q_2
	1	1	0	0	0	0	0	0	0
after 1st pulse	1	1	1	1	1	0	0	0	0
" 2nd "	1	1	0	0	0	1	0	0	0
" 3rd "	1	1	1	0	1	1	1	0	0
" 4th "	1	1	0	0	0	0	0	0	1
" 5th "	1	1	1	0	1	0	0	1	1
" 6th "	1	1	0	0	0	0	0	0	0

6:1 divider Tableau to be followed

$J_0=K_0=1$; $J_1=Q_0\bar{Q}_1\bar{Q}_2$; $K_1=Q_0$; $J_2=Q_0Q_1\bar{Q}_2$;

$K_2=Q_0\bar{Q}_1Q_2$

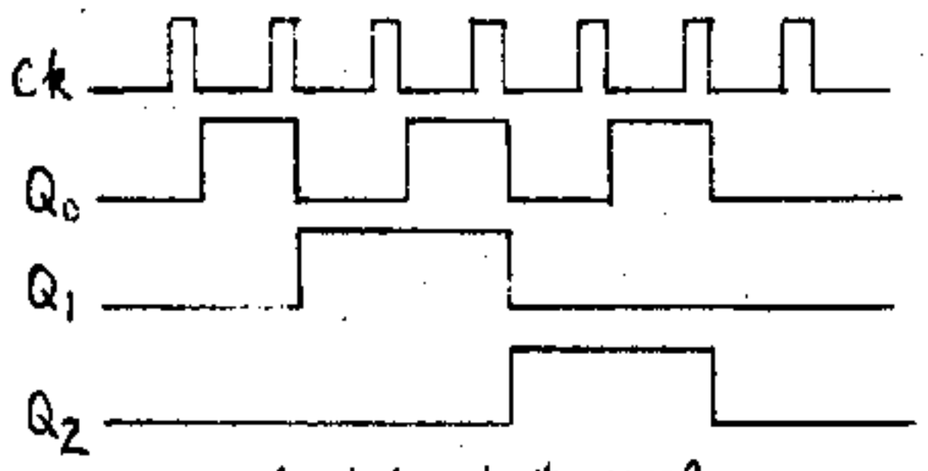

desired output waveforms

7-31 The same as the diagram of Prob. 7-28.

An alternate solution with arbitrary output waveform is given below.

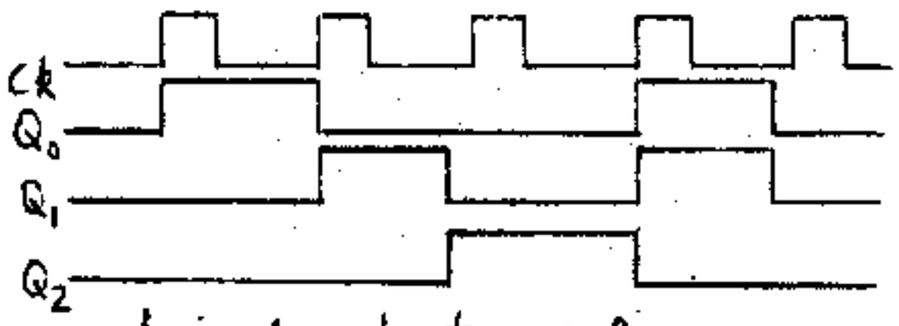

desired output waveform

	J_0	K_0	Q_0	J_1	K_1	Q_1	J_2	K_2	Q_2
before 1st pulse	1		0	0		0	0		0
after 1st "		1	1	1		0	0		0
" 2nd "	0		0		1	1	1		0
" 3rd "	1		0	1		0		1	1
" 4th "		1	1		1	1	0		0
" 5th "			0	0		0	0		0

$J_0=\bar{Q}_1$; $K_0=Q_0$; $J_1=Q_0+Q_2$; $K_1=Q_1$; $J_2=\bar{Q}_0Q_1$; $K_2=Q_2$

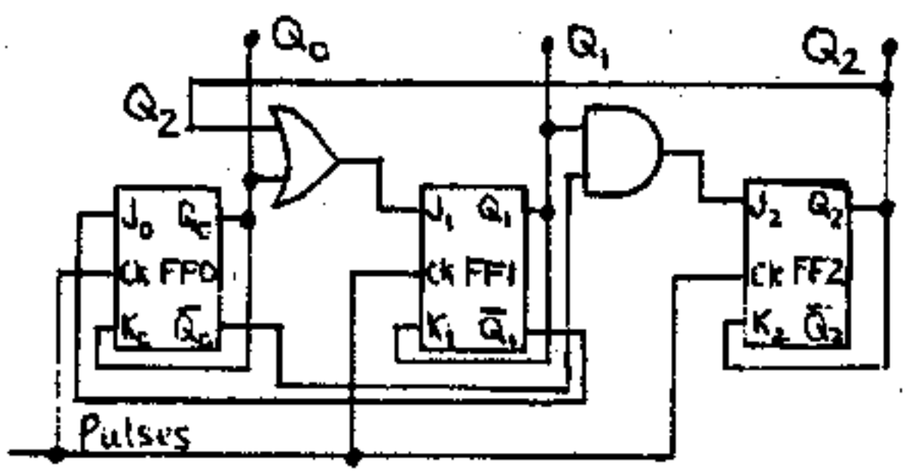

7-32

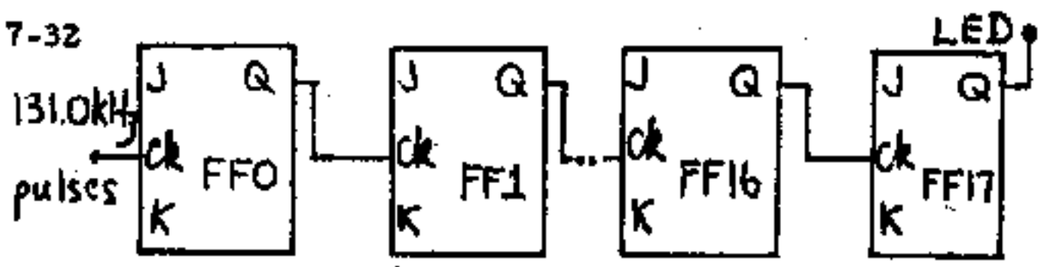

We get $\dfrac{131000 \text{ clock pulses/s}}{131072 \text{ clock pulses/flicker}} = 0.99945 \dfrac{\text{flickers}}{\text{s}}$

Thus, during one hour we will get

$$3600\,\text{s} \times 0.99945 \frac{\text{flickers}}{\text{s}} \approx 3598.02$$

rather than 3600. Thus the system is off by about 1.98 s per hour.

CHAPTER 8

8-1 Following the arguments of Sec. 2-6, we see that $W \approx W_n \gg W_p$, and from Eq. (2-15)

$$W(x)=a-b(x)=\left\{\frac{2\epsilon}{qN_D}[V_o-V(x)]\right\}^{1/2} \qquad (1)$$

Since $V_{DS}=0$, the drain current $I_D=0$, hence b and V are independent of x. Thus, if we let b=0 in (1) and solve for V (assuming that $V \gg V_o$), we obtain the following expression for V_P

$$|V_P| = qN_Da^2/2\epsilon \qquad (2)$$

(a) The relative dielectric of silicon is 12 (Table 1-1) and, from Appendix A1, $\epsilon = 12\epsilon_o$ $= 12\times8.849\times10^{-12}\text{F/cm} = 1.062\times10^{-10}\text{F/m}$.

Thus, from (2)

$$|V_P| = \frac{1.60\times10^{-19}\text{C}\times7\times10^{20}/\text{m}^3\times(2\times10^{-6}\text{m})^2}{2\times1.062\times10^{-10}\text{F/m}} = 2.11 \text{ V}.$$

(b) $\rho = \dfrac{1}{p\mu_p q} \approx \dfrac{1}{N_A\mu_p q}$

where, using Eq. (2) $N_A = 2\epsilon V_P/qa^2$. From the two equations above

$$\rho = \frac{a^2}{2\mu_p\epsilon V_P} \qquad (3)$$

In our case, using Table 1-1 and Appendix A1, $\epsilon = 16\times8.849\times10^{-12}$ $= 1.416\times10^{-10}\text{F/m}$ and

$$\rho = \frac{(2\times10^{-6})^2}{2\times1800\times10^{-4}\times1.416\times10^{-10}\times3.94} = \underline{1.99\times10^{-2}\ \Omega\text{-m}}$$

8-2 Through the operating point we draw a load line whose slope is 1/5 kΩ. This intersects the I_D-axis at 6.0 mA and the V_{DS}-axis at 30.0 V, hence $V_{DD}=30.0$ V. The gate voltage at the quiescent point is −1.0 V. To change I_D to 3 mA, we stay on the load line and estimate the required gate voltage to be $V_{GS}=\underline{-0.75\text{ V}}$.

(b) Now we desire $I_D=2.5$ mA with $V_{GS}=-0.75$ V. These two values specify a point on the drain characteristics of Fig. 8-3. Draw a load line with slope 1/5 kΩ again. This line intersects the V_{DS}-axis at ~14.8 V. Hence $V_{DD}=\underline{14.8\text{ V}}$

8-3 (a) From Eq. (1-17) $r_{DS(on)}=\dfrac{L}{\sigma A}$; but for $V_{GS}=0$ we have A=2aw (see Fig. 8-1). Since $\sigma qN_D\mu_n$

$$r_{DS(on)} = L/2awqN_D\mu_n \qquad \text{Q.E.D.}$$

(b) From the slope of the line with $V_{GS}=0$ we obtain from Fig. 8-3.

$$r_{DS(on)} = \frac{V_{DS}}{I_D} \approx \frac{3.3\text{ V}}{6.0\text{ mA}} = \underline{0.55\text{ k}\Omega}$$

(c) Using Eq. (8-2) we have

$$r_{DS(on)} = \frac{L}{2awq\,N_D\mu_n} = \frac{L\rho}{2aw} \quad \text{since} \quad \rho = \frac{1}{q\mu_n N_D}$$

Thus $r_{DS(on)} = \dfrac{6\ \mu m \times 10 \times 10^4\ \Omega\text{-}\mu m}{2 \times 4\ \mu m \times 120\ \mu m} = 625\ \Omega$

8-4 $r_{DS(on)} = \dfrac{L}{2awq\,N_D\mu_n}$ from Eq. (8-2)

From Prob. 8-1 $N_D = \dfrac{2\epsilon}{qa^2} \dfrac{2\times(12\times 8.849\times 10^{-12} F/cm)}{1.60\times 10^{-19}\times(4\times 10^{-4} cm)^2}$

$= 8.296\times 10^{15}/cm^3$ where Table 1-1 and Appendix A1 were used.

$$r_{DS(on)} = \frac{20\times 10^{-4}}{2\times(4\times 10^{-4})\times 16\cdot 10^{-4}\cdot 1.6\cdot 10^{-19}\cdot 8.296\cdot 10^{15}\times 1{,}300} = \underline{905\ \Omega}$$

8-5 (a) Drawing the load line of slope = $-1/1.14\ k\Omega$ from the point (-40, 0) on Fig. 8.8(a) we find that for $V_{GG} = -14$ V, $\underline{I_D = -20\ mA}$ and $\underline{V_{DS} = -16.7\ V}$

(b) If V_{DD} remains constant, $V_{DS} = -25$ V when $V_{GG} \approx \underline{-10.8}$ V (this is found on the same load line on Fig. 8-8a).

8-6 (a)

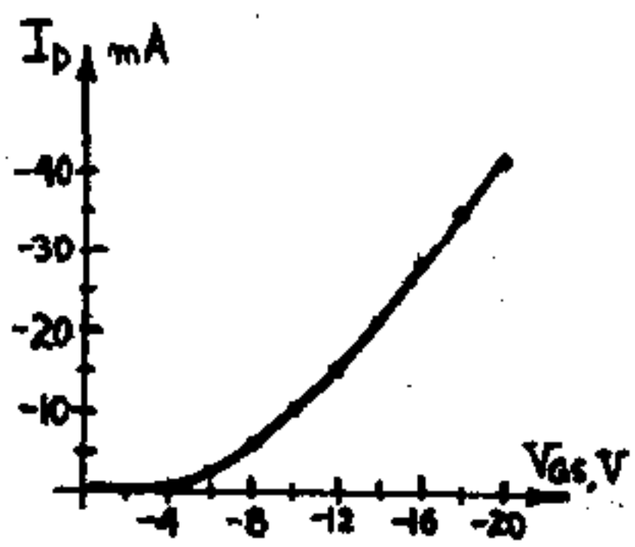

The transfer curve above was drawn by obtaining (I_D, V_{GS}) pairs on the $V_{DS} = -20$ V line on Fig. 8-8a.

(b) The drain characteristics of Fig. 8-8a are shown below and the locus of points for which $V_{GS} - V_{DS} = V_T$ is indicated.

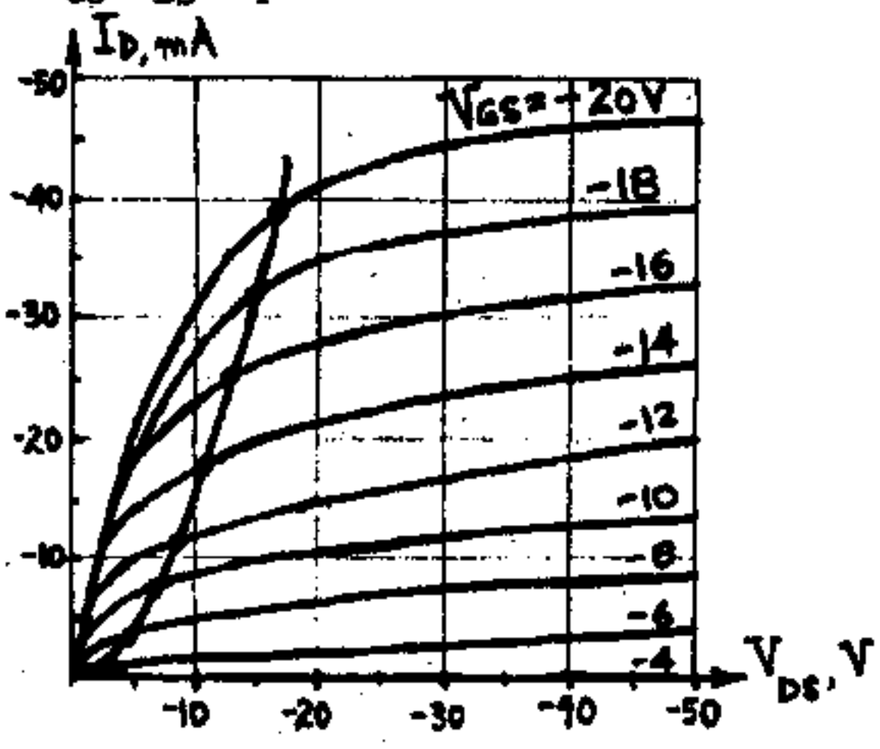

8-7 (a) Since the driver and the load are identical, they are both represented by the output curves supplied. We first plot the locus of points where $V_{GS2} = V_{DS2} = V_L$ on the drain characteristic curve of the load (Fig. A). These points also give I_{D2} vs. V_L. Now, draw the load curve which is a plot of $I_{D1} = I_{D2}$ vs. $V_{DS1} = V_o = -V_{DD} - V_L = -20 - V_{DS2}$. For a given value of $I_{D1} = I_{D2}$, we find $V_{DS2} = V_L$ from Fig. A and plot the locus of the values I_{D1} vs. $V_o = V_{DS1}$ on the driver drain characteristic curve (Fig. B). For example, from Fig. A, for $I_{D2} = -4$ mA, we find $V_{DS2} = -18.3$ V. Hence, $I_{D1} = -4$ mA is located at $V_{DS1} = -20 + 18.3 = -1.7$ V in Fig. B. Now, for each value of $V_{GS1} = V_i$ in Fig. B, a value of $V_{DS1} = V_o$ is obtained from load curve B. A plot of V_o vs. V_i is plotted in Fig. C. This is the transfer characteristic (labeled, C).

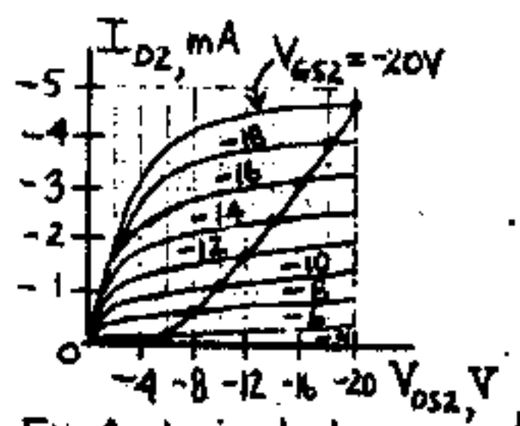

Fig. A showing load curve A.

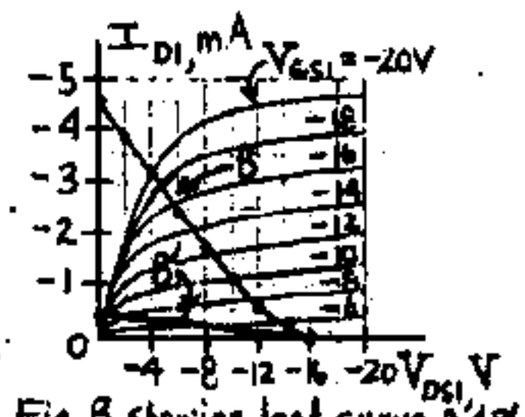

Fig. B showing load curve B'

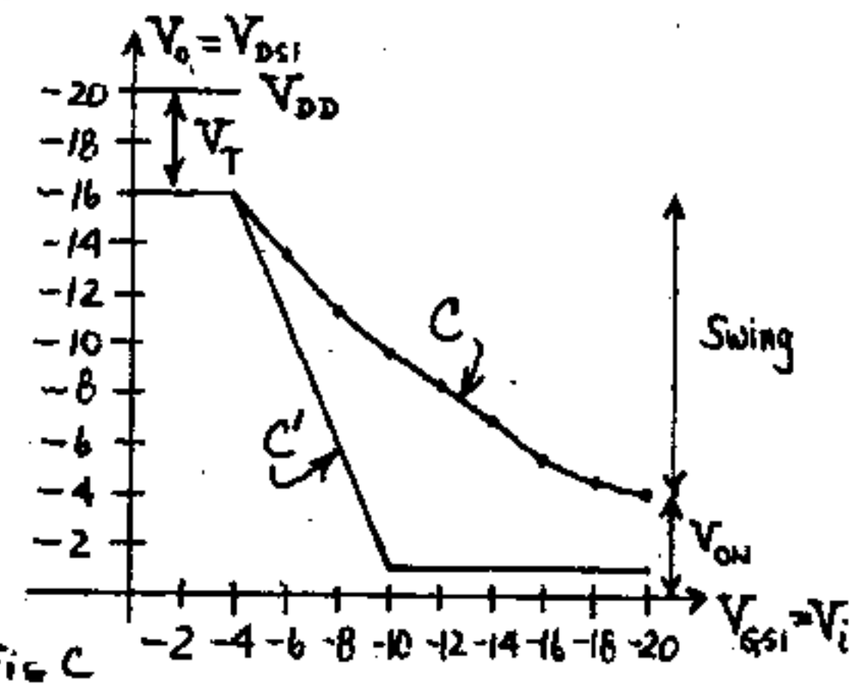

Fig. C

b) If the resistance of Q2 is >> than that of Q1, it's output curves look like Fig. D and the dotted line represents load curve A'. In a similar manner as described in (a), load curve B' is determined and is shown in Fig. B. Again, for the transfer curve, a plot of $V_o = V_{DS1}$ vs. $V_i = V_{GS1}$ is obtained from load curve B'. This curve is shown in Fig. C, labeled, C'.

Fig. D

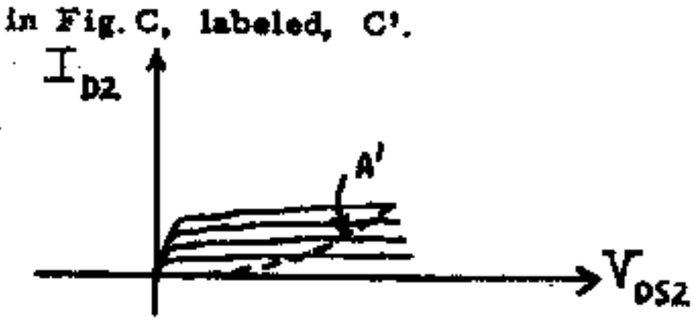

8-8 (a) Since the driver and the load are identical, they are both represented by the output curves supplied. We first plot the locus if points where $V_{GS2} = V_{DS2} = V_L$ on the drain characteristic curve of the load (Fig. A). These points also give I_{D2} vs. V_L. Now, draw the load curve which is a plot of $I_{D1} = I_{D2}$ vs. $V_{DS1} = V_o = -V_{DD} - V_L = -20 - V_{DS2}$. For a given value of $I_{D1} = I_{D2}$, we find $V_{DS2} = V_L$ from Fig. A and plot the locus of the values I_{D1} vs. $V_o = V_{DS1}$ on the driver drain characteristic curve (Fig. B). For example, from Fig. A, for $I_{D2} = -4$ mA, we find $V_{DS2} = -7.8$ V. Hence, $I_{D1} = -4$ mA is located at $V_{DS1} = -10 + 7.8 = -2.2$ V in Fig. B. Now, for each value of $V_{GS1} = V_i$ in Fig. B, a value of $V_{DS1} = V_o$ is obtained from load curve B. A plot of V_o vs. V_i is plotted in Fig. C. This is the transfer characteristic (labeled, C).

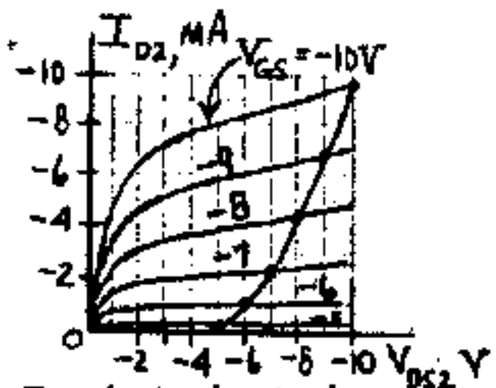

Fig. A showing load curve A

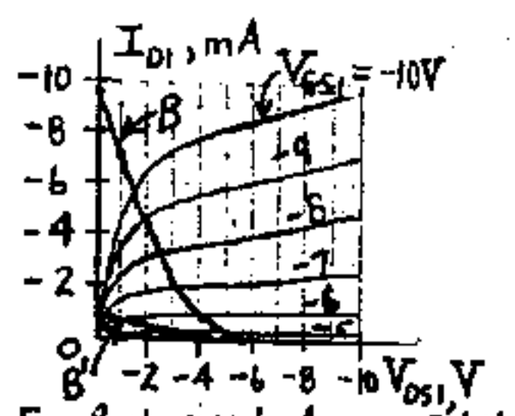

Fig. B showing load curve B & B'

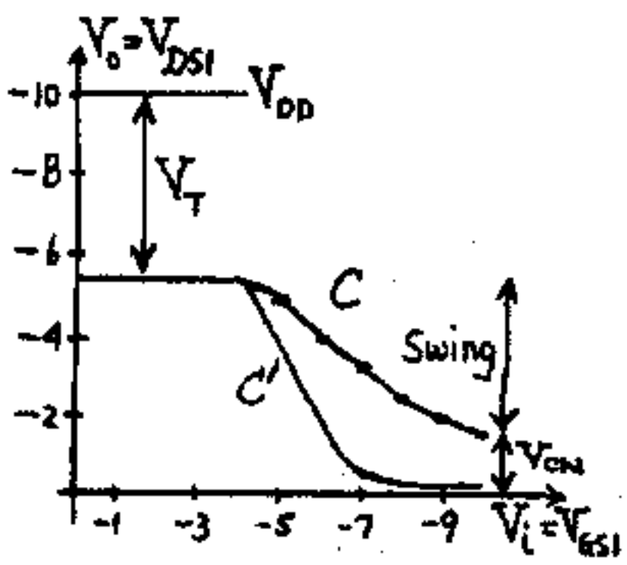

Fig. C

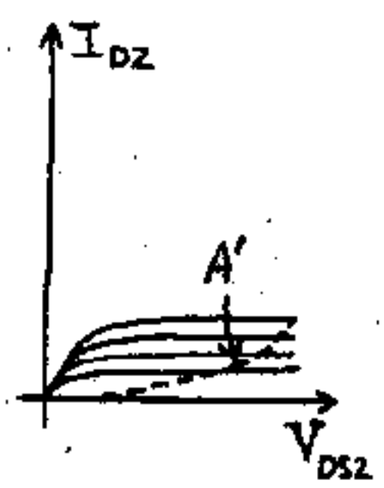

Fig. D

(b) If the resistance of Q2 is >> than that of Q1, its output curves look like those of Fig. D and the dotted line represents load curve A'. In a similar manner as described in (a), load curve B' is determined and is shown in Fig. B. Again, for the transfer curve, a plot of $V_o = V_{DS1}$ vs. $V_i = V_{GS1}$ is obtained from load curve B'. This curve is shown in Fig. C, labeled, C'.

8-9 (a)

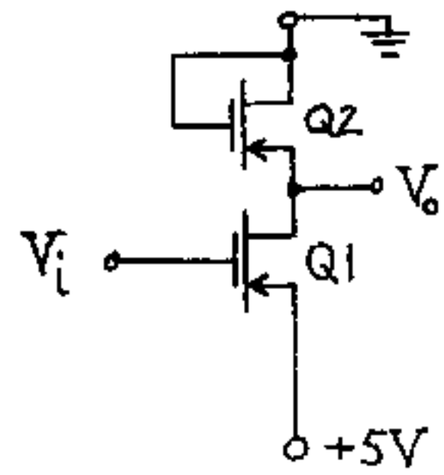

(b) Assume $|V_{ON}|$ and $|V_T|$ are $\simeq 0$. For $V_i = 5$ V, Q2 is off and the current = 0. Hence, $V_o = 0$ V. For $V_i = 0$ V, Q1 is ON and $V_o = 5$ V. Thus, we have an inverter.

8-10 (a) Using Eq. (8-4), we have, $I_D = (\mu C_o w/2L)(V_G - V_T)^2$. From Fig. (8-14b), $V_{GS2} = V_{DD} - V_o = V_{DS2} = V_G$. Thus, for the load $I_{D2} = k_L^2(V_{DD} - V_o - V_T)^2$. For the driver, $V_G = V_i = V_{GS1}$ and $V_o = V_{DS1}$. Thus, $I_{D1} = k_D^2(V_i - V_T)^2$. Since $I_{D1} = I_{D2}$, $k_D^2(V_i - V_T)^2 = k_L^2(V_{DD} - V_o - V_T)^2$. Solving for V_o gives, $V_{DD} - V_o - V_T = (k_D/k_L)(V_i - V_T)$ or $V_o = -(k_D/k_L)(V_i - V_T) + V_{DD} - V_T$.

(b) The transfer characteristic is linear with a slope $= -(k_D/k_L)$. If Q1 and Q2 are identical, then $k_D = k_L$ and the slope $= -1$ which is in agreement with curve A of Fig. 8-17a. Note that curve B is also linear with a higher negative slope. Since Q2 has a much higher resistance than Q1, $k_D >> k_L$ which confirms this greater negative slope. Thus, the slope of the transfer curve increases as the resistance (which is proportional to L/w) of the load increases.

8-11 From Eq. (8-4), $I_D = k^2(V_G - V_T)^2$. From Eq. (8-3), $I_D = k^2[2(V_G - V_T)V_D - V_D^2]$. For the load, $V_G = V_{GS2} = V_{DS2} = V_{DD} - V_o$. Thus, $I_{D2} = k_L^2(V_{DD} - V_o - V_T)^2$, using Eq. (8-4). For the driver, $V_G = V_{GS1} = V_i$ and $V_o = V_D = V_{DS1}$. Thus, from Eq. (8-3), $I_{D1} = k_D^2[2(V_i - V_T)V_o - V_o^2]$. Since $I_{D1} = I_{D2}$, $k_L^2(V_{DD} - V_o - V_T)^2 = k_D^2[2(V_i - V_T)V_o - V_o^2]$. Expanding gives,

$$k_L^2[V_o^2 + V_T^2 + V_{DD}^2 + 2(V_oV_T - V_TV_{DD} - V_oV_{DD})] = k_D^2[2(V_i - V_T)V_o - V_o^2].$$

Dividing both sides by k_L^2 and regrouping gives

$$V_o^2(1 + \beta_R) + 2V_o[(V_T - V_{DD}) + \beta_R(V_i - V_T)] + (V_{DD} - V_T)^2 = 0$$

8-12 (a) From Eq. (8-7), $V_{DS2}-V_{GS2}=-V_{DD}+V_{GG}$ $=-20+28=8$ V, or $V_{DS2}=V_{GS2}+8$ V. For each value of V_{GS2} indicated, V_{DS2} is calculated from the above equation. The current, I_{D2}, for each pair of values V_{GS2} and V_{DS2} is plotted vs. V_{DS2} as indicated by curve A in Fig. A. The load curve B of Fig. B is a plot of I_{D1} vs. V_{DS1} for $I_{D1}=I_{D2}$ and $V_{DS1}=-V_{DD}-V_{DS2}=-20-V_{DS2}$ where the values of I_{D2} and V_{DS2} are obtained from curve A. For example, from curve A, for $I_{D2}=-4$ mA, $V_{DS2}=-11$ V. Thus, on curve B, at $I_{D1}=-4$ mA, $V_{DS1}=-20-V_{DS2}=-20+11=-9$ V.

The transfer characteristic $V_o=V_{DS1}$ vs. $V_i=V_{GS1}$, obtained from curve B is curve C of Fig. C.

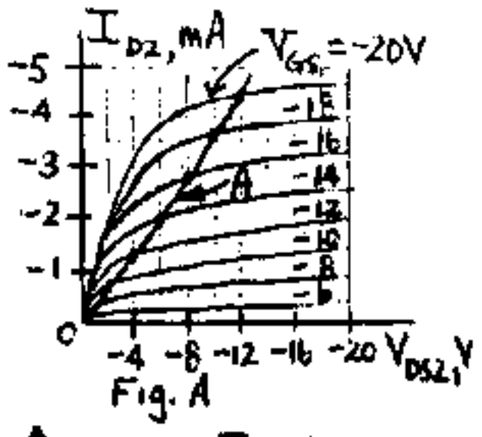

Fig. A

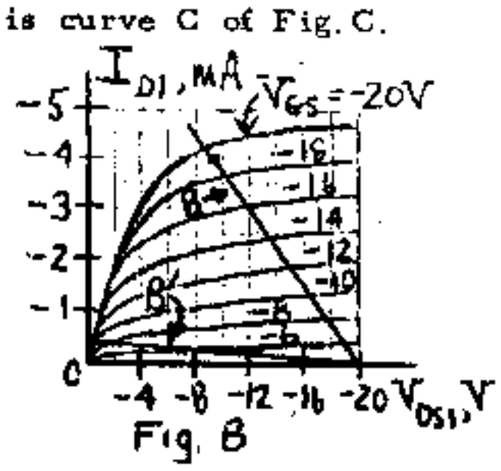

Fig. B

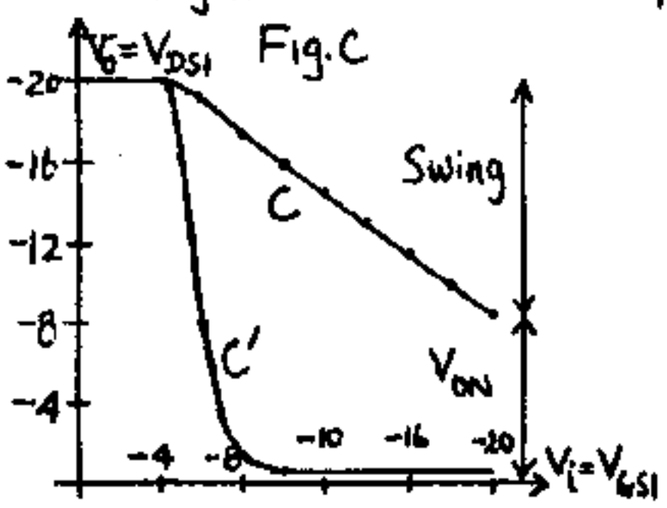

Fig. C

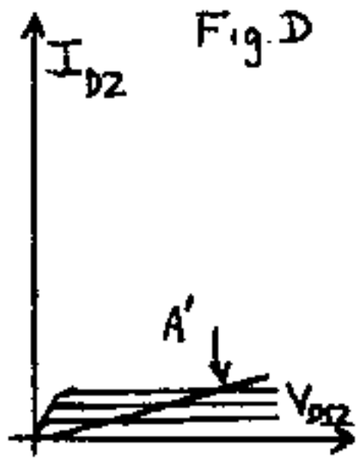

Fig. D

(b) If the resistance of Q2 is much greater than that of Q1, its output curves look as in Figure D, and the load curve is A'. In a similar manner as described in (a), load curve B' is determined and is shown in Fig. B. Again, for the transfer curve, a plot of $V_o=V_{DS1}$ vs. $V_i=V_{GS1}$ is obtained from load curve B'. This is curve C' in Fig. C.

8-13 (a) From Eq. (8-7), $V_{DS2}-V_{GS2}=-V_{DD}+V_{GG}=-10+17$ $=7$ V, or $V_{DS2}=V_{GS2}+7$ V. For each value of V_{GS2} indicated, V_{DS2} is calculated from the above equation. The current, I_{D2}, for each pair of values V_{GS2} and V_{DS2} is plotted vs. V_{DS2} as indicated by curve A in Fig. A. The load curve B of Fig. B is a plot of I_{D1} vs. V_{DS1} for $I_{D1}=I_{D2}$ and $V_{DS1}=V_{DD}-V_{DS2}=-10-V_{DS2}$ where the values of I_{D2} and V_{DS2} are obtained from curve A. For example, from curve A, for $I_{D2}=-6$ mA, $V_{DS2}=2.5$ V. Thus, on curve B, at $I_{D1}=-6$ mA, $V_{DS1}=-10-V_{DS2}=-10+2.5=-7.5$ V. The transfer characteristic $V_o=V_{DS1}$ vs. $V_i=V_{GS1}$, obtained from curve B, is curve C of Fig. C.

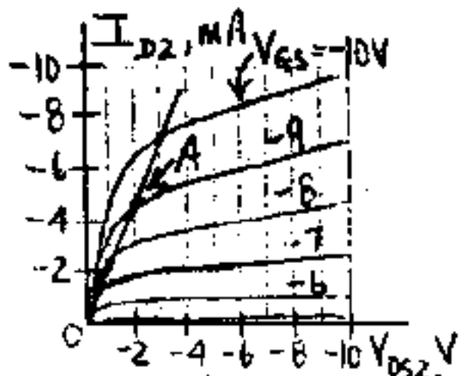

Fig. A

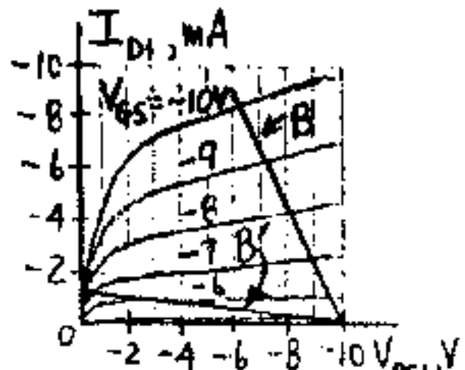

Fig. B

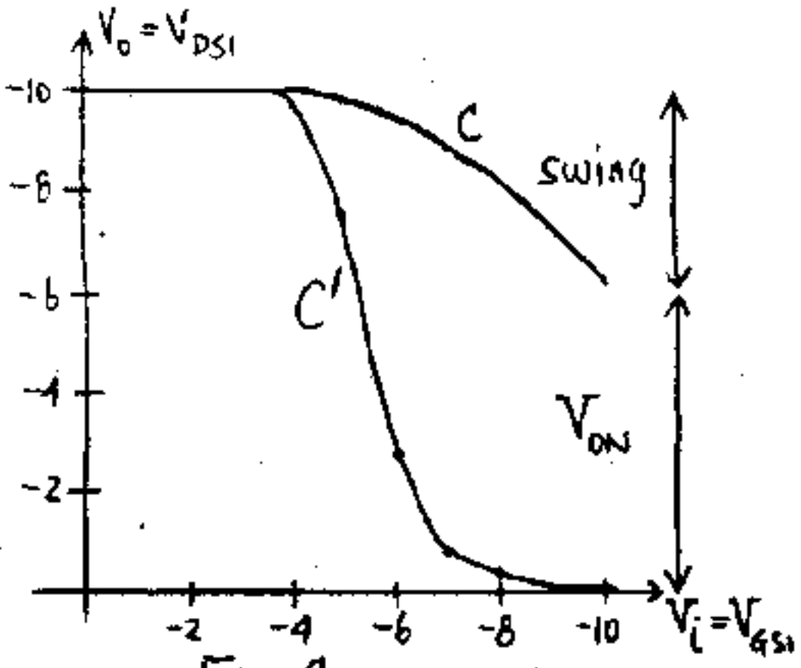

Fig. C

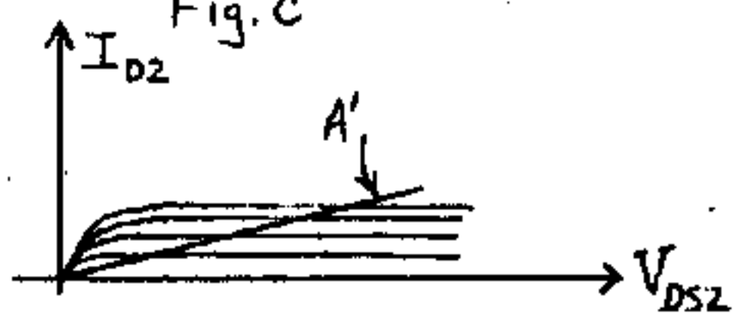

Fig. D

(b) If the resistance of Q2 is >> than that of Q1, it's output curves are Fig. D, and the load curve is A'. In a similar manner as described in (a), load curve B' is determined and is shown in Fig. B. Again, for the transfer curve, a plot of $V_o=V_{DS1}$ vs. $V_i=V_{GS1}$ is obtained form load curve B'. This is curve C' in Fig. C.

8-14 (a) From Eq. (8-3), for the load, $I_{D2}=k_L[2(V_{GS2}-V_T)V_{DS2}-V_{DS2}^2]$. From Eq. (8-7), $V_{GS2}=V_{DS2}+(V_{GG}-V_{DD})=V_{DS2}+V'$. Also, $V_{DS2}=V_{DD}-V_{DS1}=V_{DD}-V_o$. Thus, $V_{GS2}=V_{DD}-V_o+V'$.

Substituting into Eq. (8-3) gives,

$$I_{D2}=k_L[2(V_{DD}-V_o+V'-V_T)(V_{DD}-V_o)-(V_{DD}-V_o)^2]$$

From Eq. (8-4), for the driver,

$I_{D1}=k_D[V_{GS1}-V_T]^2=k_D(V_i-V_T)^2$. Since $I_{D1}=I_{D2}$,

$$k_L[2(V_{DD}-V_o+V'-V_T)(V_{DD}-V_o)-(V_{DD}-V_o)^2]$$
$$=k_D(V_i-V_T)^2.$$

(b) For $V_i = V_T$,

$$k_L[2(V_{DD}-V_o+V'-V_T)(V_{DD}-V_o)-(V_{DD}-V_o)^2]=0$$

$$[2(V_{DD}-V_o+V'-V_T)-(V_{DD}-V_o)](V_{DD}-V_o) = 0$$

$$(V_{DD}-V_o+2V'-2V_T)(V_{DD}-V_o) = 0.$$

Thus, $V_{DD} = V_o$

(c) Using the result of part (a), by substitution, with $k_L = k_D$, $2(10-V_o+16-10-2)(10-V_o)-(10-V_o)^2 = (V_i-2)^2$

$$V_o^2 - 28\,V_o + 180 = (V_i-2)^2$$

For $V_i=6$, we have $V_o^2-28V_o+164=0$

Thus, $V_o = \underline{8.35\ V}$ which is in reasonable agreement with 8.8 V obtained from the figure. For $V_i=10$, we have $V_o^2-28\,V_o+116=0$. Thus, $V_o = \underline{5.06\ V}$ which also is close to 6.0 V obtained from the figure.

8-15 (a) We obtain load curve B on Fig. 1 from depletion curve A (given) by noting that $I_{D1}=I_{D2}$ and $V_{DS1}=-V_{DD}-V_{DS2}=-20-V_{DS2}$. The transfer characteristic, C, of Fig. 2 is obtained by plotting $V_o = V_{DS1}$ vs. $V_i=V_{GS1}$. For example, on Fig. 1 we find that when $V_{GS}=-18$ V, $V_{DS}=-12$ V.

(b) We obtain load curve B' on Fig. 1 from depletion curve B by noting that $I_{D1}=I_{D2}$ and $V_{DS1}=-20-V_{DS2}$. The transfer characteristic, C' of Fig. 2 is obtained by plotting $V_o=V_{DS1}$ vs. $V_i=V_{GS1}$. For example, on Fig. 1 we find that when $V_{GS}=-6$ V, $V_{DS}=-17$ V.

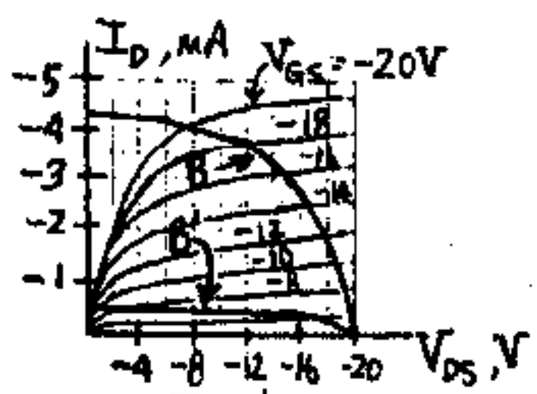

Fig. 1

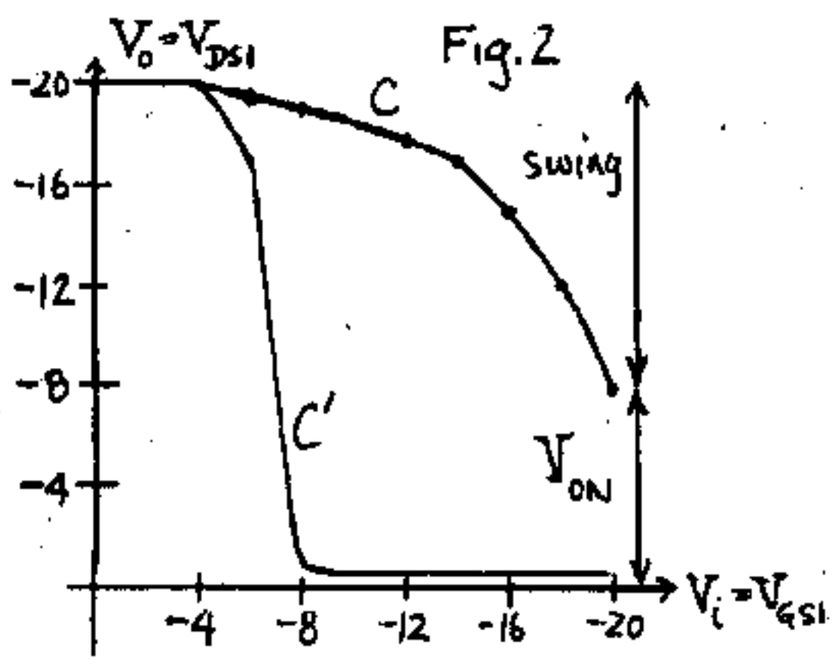

8-16 (a) We obtain load curve B on Fig. 1 from depletion curve A by noting that $I_{D1}=I_{D2}$ and $V_{DS1}=V_{DD}-V_{DS2}$ $=-20-V_{DS2}$. The transfer characteristic, C, of Fig. 2 is obtained by plotting $V_o=V_{DS1}$ vs. $V_i=V_{GS1}$. For example, on Fig. 1 we find that when $V_{GS}=-10$ V, $V_{DS}=-4.5$ V.

(b) We obtain load curve B' on Fig. 1 from depletion curve B by noting that $I_{D1}=I_{D2}$ and $V_{DS1}=-20-V_{DS2}$. The transfer characteristic, C' of Fig. 2 is obtained by plotting $V_o=V_{DS1}$ vs. $V_i=V_{GS1}$. For example, on Fig. 1, we find that when $V_{GS}=-5$ V, $V_{DS}=-9.5$ V.

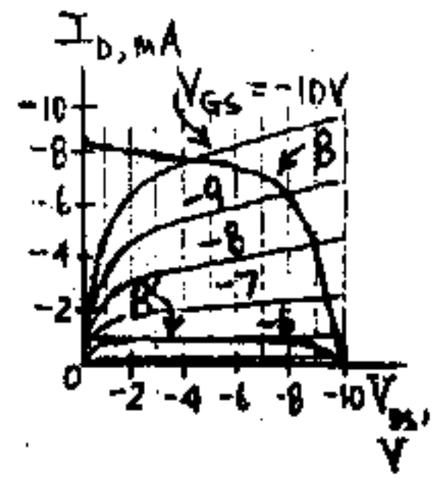

Fig. 1

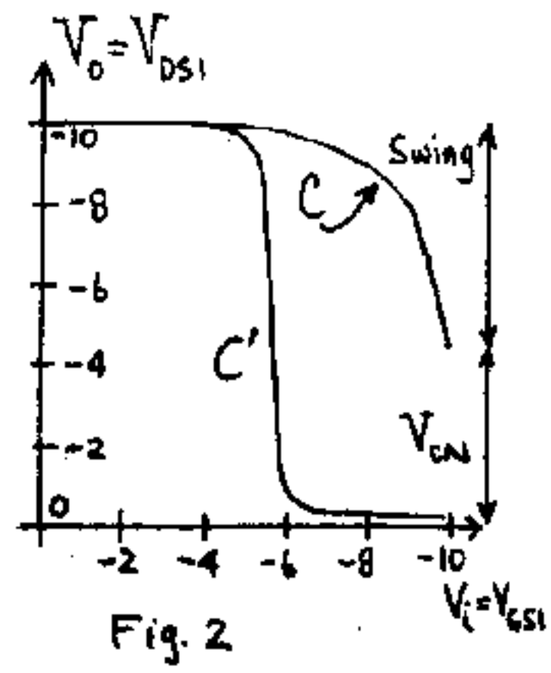

Fig. 2

8-17 (a) Assume V_{ON} and V_T are negligible. Note that when a FET is ON, current flows but not when it is OFF. If both V_1 and $V_2 = V(1) = V_{DD}$, then Q1 and Q2 are both ON and $V_o = 0$ V. (Note that this is true regardless of the inputs to C and D). Similarly, if both V_3 and $V_4 = V(1)$, Q3 and Q4 will both be ON and $V_o = 0\ V = V(0)$, regardless of the inputs to A and B. This only leaves the cases where either A or B or both are = V(0), and, either C or D or both are = V(0). This insures that either Q1, Q2 or both are OFF and that either Q3, Q4 or both are also OFF. Hence, current will not flow through either set of FETs and $V_0 = V_{DD} = V(1)$.

(b) Note that Q1, Q2 and Q5 are equivalent to the NAND gate configuration of Figure 8-22. Likewise for the combination of Q3, Q4 and Q5. These two functions are connected via wired AND logic. Thus, we have $\overline{AB}\ \overline{CD}$ which, by De Morgan's laws, is equivalent to $\overline{AB+CD}$.

8-18

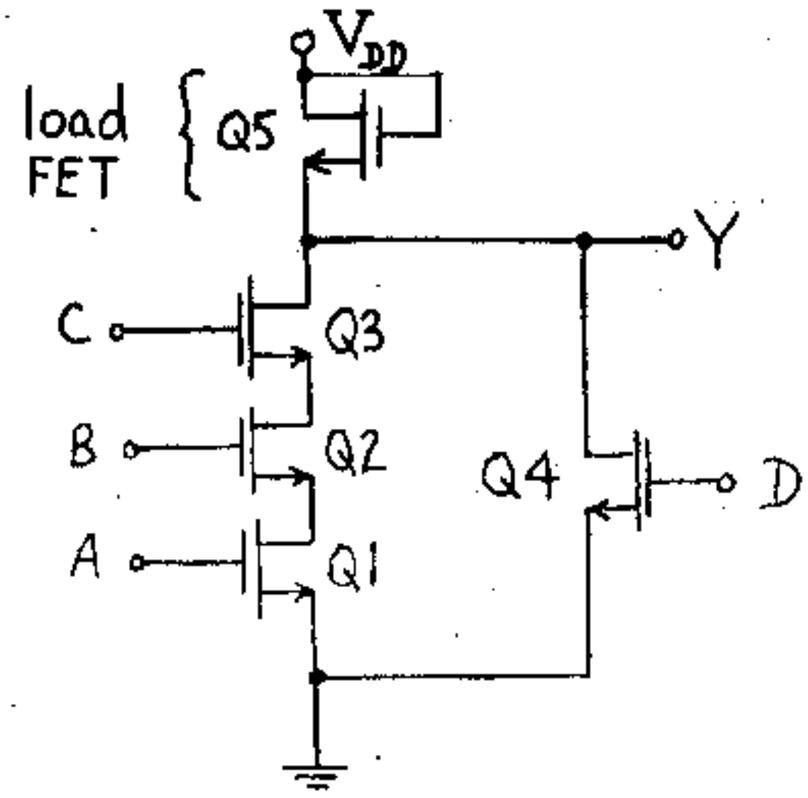

8-19 Note that $\overline{A+B} + \overline{C+D} = \overline{(A+B)(C+D)}$ by De Morgan's laws.

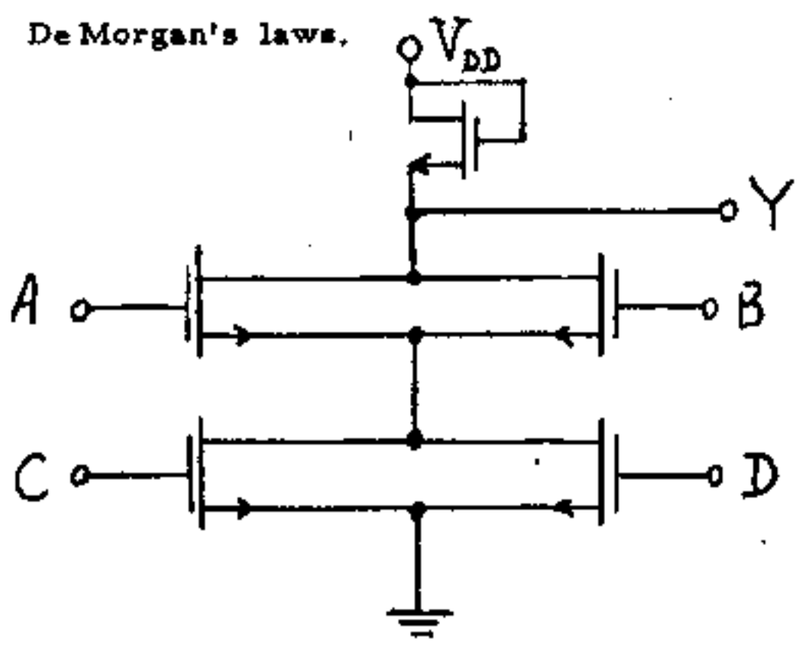

8-20 There are two ways to construct the AND gate.

(a) $AB = \overline{\overline{AB}}$. Thus, we simply negate a NAND gate with an inverter.

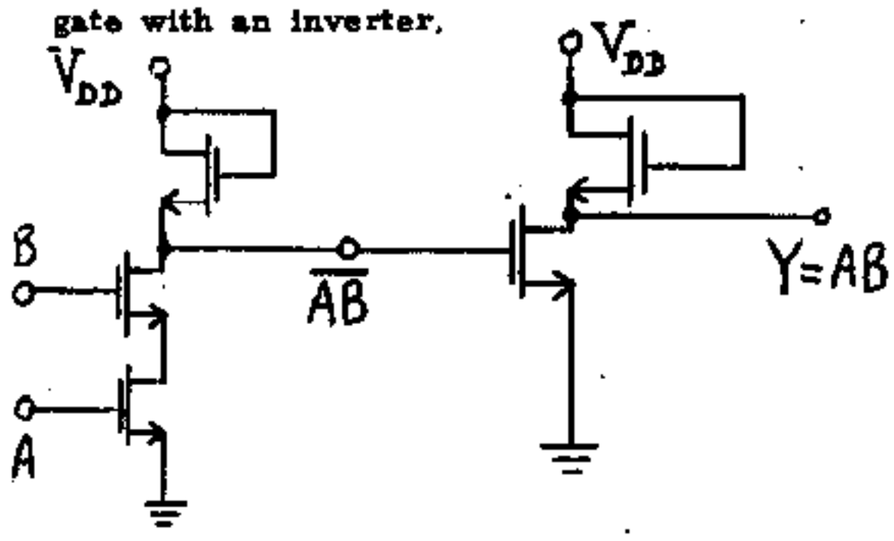

(b) $AB = \overline{\overline{A}+\overline{B}}$. Thus, we negate A(B) with an inverter and combine $\overline{A}$ and $\overline{B}$ through a NOR gate.

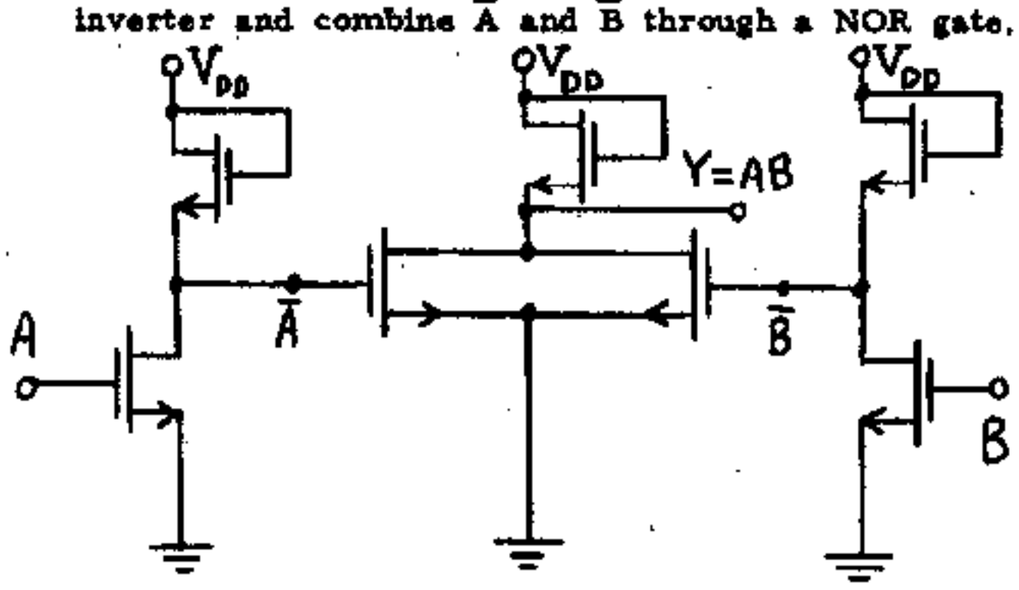

8-21 $Y = \overline{\overline{AB}+\overline{\overline{A}\,\overline{B}}}$. Note that this is $= \overline{\overline{AB}+(\overline{A+B})}$.

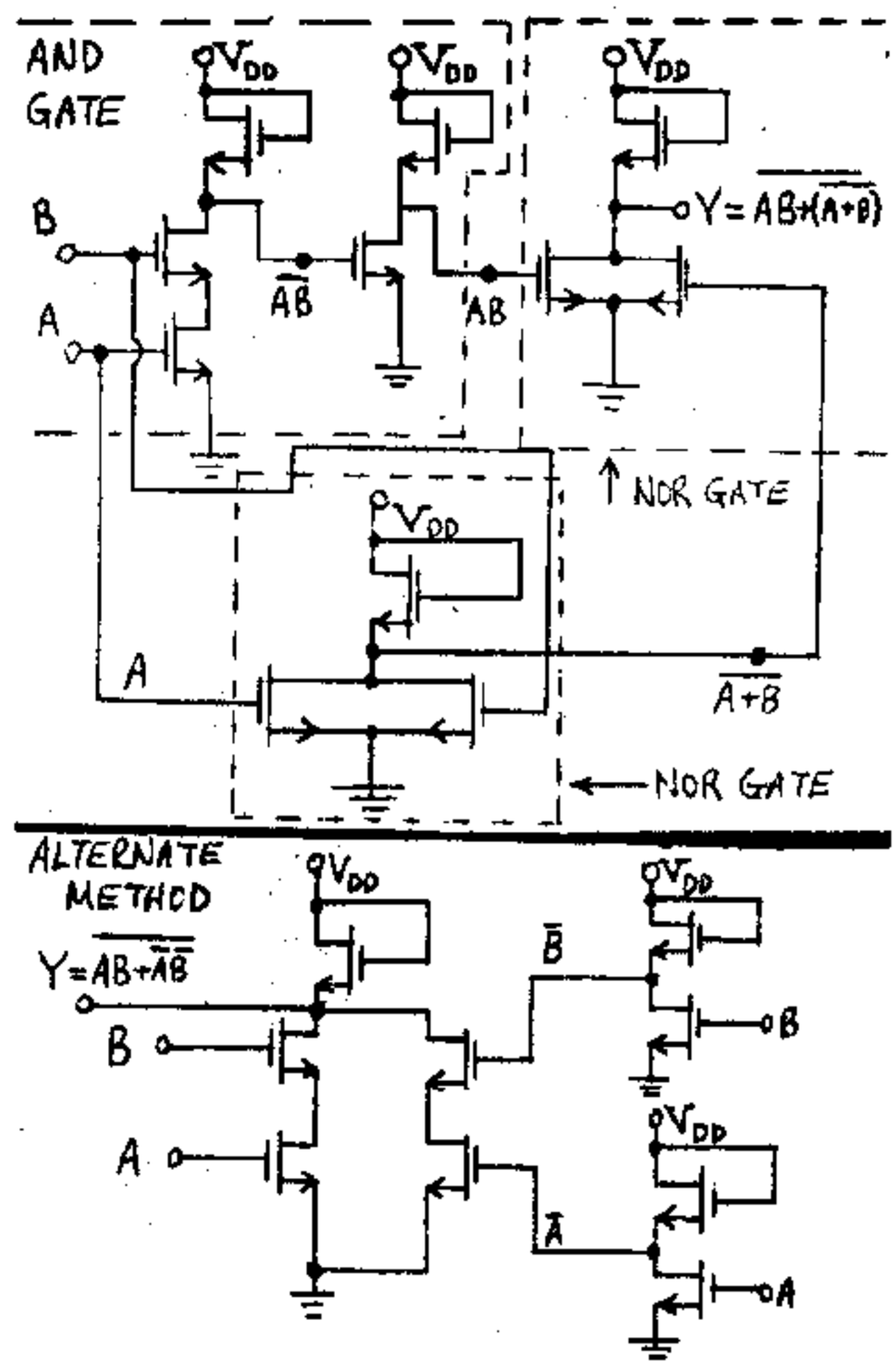

8-22 (a) Assume S=R=0. Thus, Q1 and Q2 are OFF, disconnecting the inputs from Q3 and Q5. Assume Q = 1. Then Q3 must be ON, resulting in $\overline{Q} = 0$ which maintains Q5 OFF, giving Q=1 as assumed. If we assume Q = 0, then Q3 must be OFF, resulting in $\overline{Q} = 1$ which maintains Q5 ON, giving Q = 0 as assumed. If $Q = \overline{Q} = 0$, then both Q3 and Q5 must be ON, but the corresponding gate voltage of Q3 and Q5 is also zero and since V_T is assumed = 0, this condition cannot maintain the MOSFETs ON. Similarly, if $Q = \overline{Q} = 1$, then Q3 and Q5 must be OFF. Thus the corresponding gate voltages of Q3 and Q5 is at V_{DD}. This condition would turn Q3 and Q5 ON. Thus, Q = 1, $\overline{Q} = 0$ and Q = 0, $\overline{Q} = 1$ are the only two stable states.

(b) Assume S = 1 and R = 0. Thus, Q1 is ON and $\overline{Q} = 0$. Now the input to Q5 is zero, thus Q5 is OFF. Since R = 0, Q2 is also OFF. Thus, Q = 1. (Note that since Q = 1, the input to Q3 = 1 maintaining Q3 ON and $\overline{Q} = 0$.)

8-23 (a)

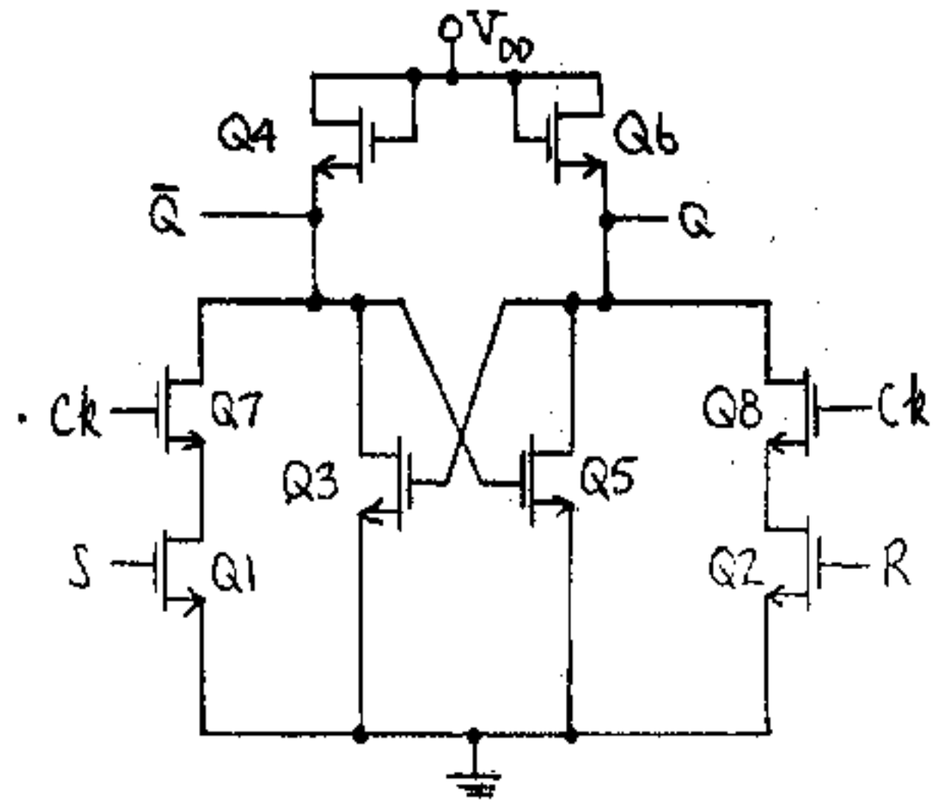

(b) When Ck = 1, Q7 and Q8 are ON and the FLIP-FLOP operates as described in Problem (8-22). When Ck = 0, Q7 and Q8 are OFF. Thus regardless of the values of S and R, Q and $\bar{Q}$ do not change state because Q1 and Q7 are disconnected from Q5 and Q2 and Q8 are disconnected from Q3.

(c) Assume Ck = 1, S = R = 0. Q1 is OFF since S = 0, thus, for the same reason as outlined in (b), Q and $\bar{Q}$ will maintain their previous value. (Note that, similarly, since R = 0, Q2 is OFF. Even though Q8 is ON, Q2 and Q8 become disconnected from the latch and $Q_{n+1} = Q_n$.)

If Ck = 1, S = 1, R = 0, then Q7 and Q1 and Q8 are ON, but Q2 is OFF. Thus, $\bar{Q}$ = 0 and the input to Q5 = 0. Hence, Q5 is OFF and Q = 1. (The input to Q3 is thus = 1 and Q3 is ON, confirming that $\bar{Q}$ = 0.) Similarly for Ck = R = 1 and S = 0, Q2, Q8, and Q7 are on but Q1 is OFF. Thus, $\bar{Q}$ = 1 and the input to Q5 = 1. Hence, Q5 is ON and Q = 0. (The input to Q3 is thus = 0 and Q3 is off, confirming that $\bar{Q}$ = 0.) If Ck = S = R = 1, Q and $\bar{Q}$ will both = 1. At the end of the clock pulse, depending upon which gate is fastest, Q = 1 or Q = 0 will result. Thus we have an indeterminate state for this input.

8-24

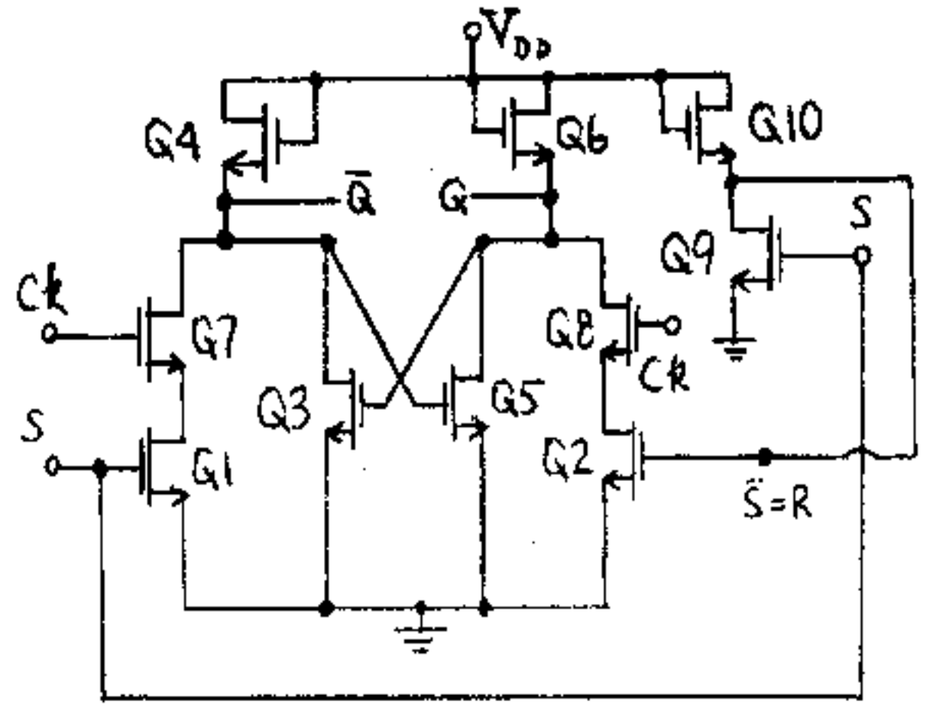

Assume Ck = S=1. Thus the output of the inverter comprised of Q9 and Q10 = $\bar{S}$ = 0. Thus Q1 and Q7 are ON, but Q2 is OFF. Thus $\bar{Q}$ = 0. Q5 is OFF and Q = 1. (Note, Q3 is ON, confirming $\bar{Q}$ = 0.) Similarly, if Ck = 1 and S = 0, Q9 is OFF and $\bar{S}$ = R = 1. Thus, Q2 and Q3 are ON but Q1 is OFF. Thus, Q = 0, the input to Q3 is 0 turning Q3 OFF which results in $\bar{Q}$ = 1. (Note Q5 is ON confirming Q = 0.) Thus D_n = 1(0) results in Q_{n+1}=1(0). Q.E.D.

8-25

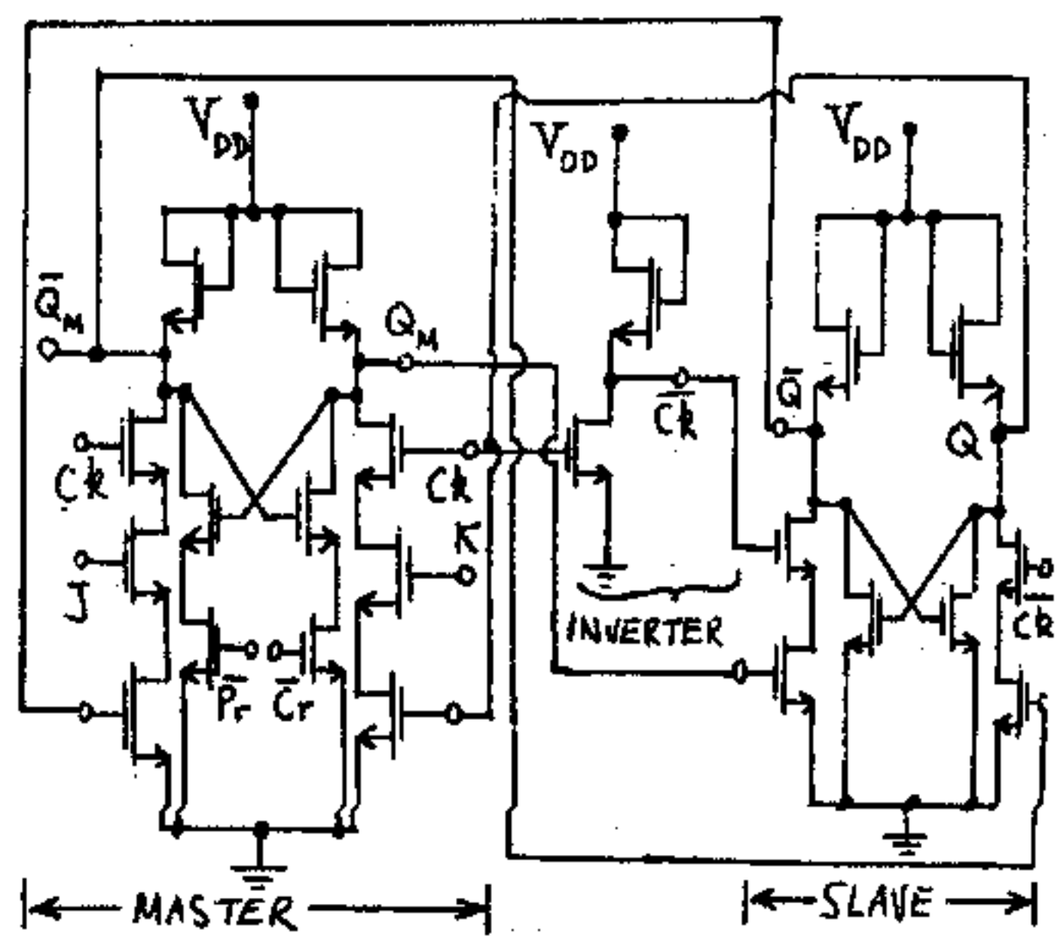

8-26

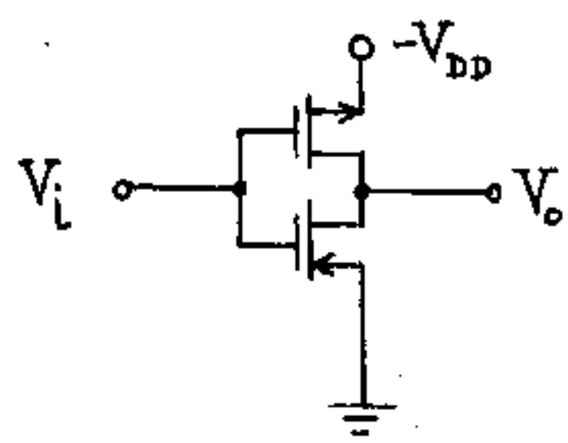

Negative logic CMOS inverter

8-27 (a) See Fig. 8-26(a).

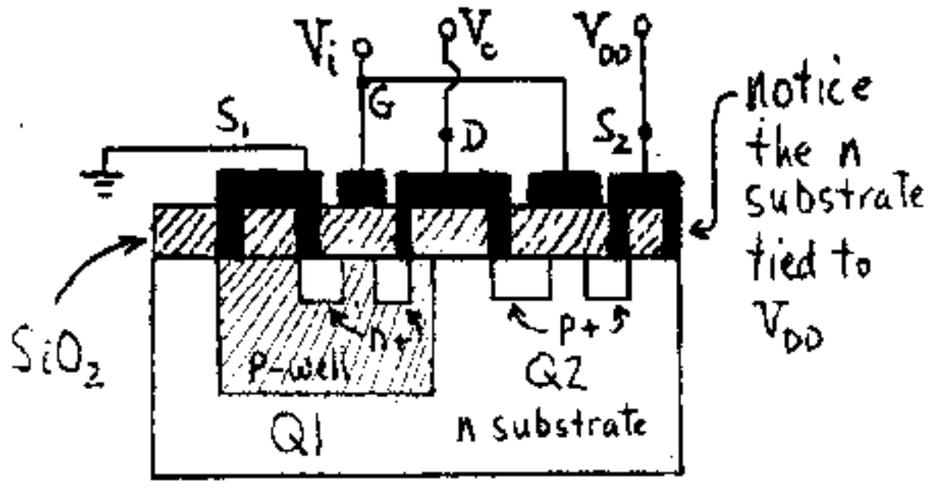

Since the n substrate is tied to the most positive voltage available (V_{DD}) the junctions between it and the p-well or the p^+ regions are reverse biased. Simiarly, since the p-well is connected to the lowest voltage (ground) the junctions between it and the n^+ regions are also reverse biased.

(b) See Fig. 8-27(b)

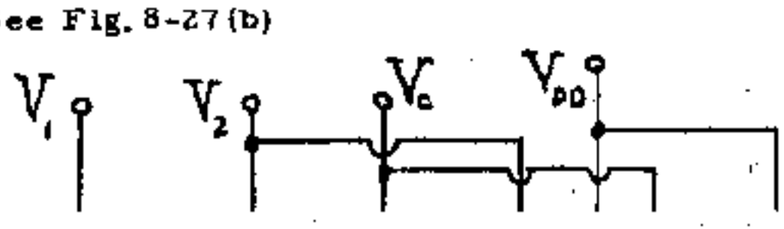

i.e. a NOR gate.

Let's examine all possible combinations of A and B, assuming positive logic. If both are zero, then Q4 is ON and $V_o = V_{DD}$ (Y=1), as it should be. If both A and B are 1, then Q1 is ON and $V_o = 0$ (Y=0), as it should.

If A=0 and B=1 Q4 and Q1 will be ON, thus $V_{D1} \approx 0$ and $V_{S4} \approx V_{DD}$, which is impossible since these are shorted; thus this circuit can not operate as a NOR gate.

8-29

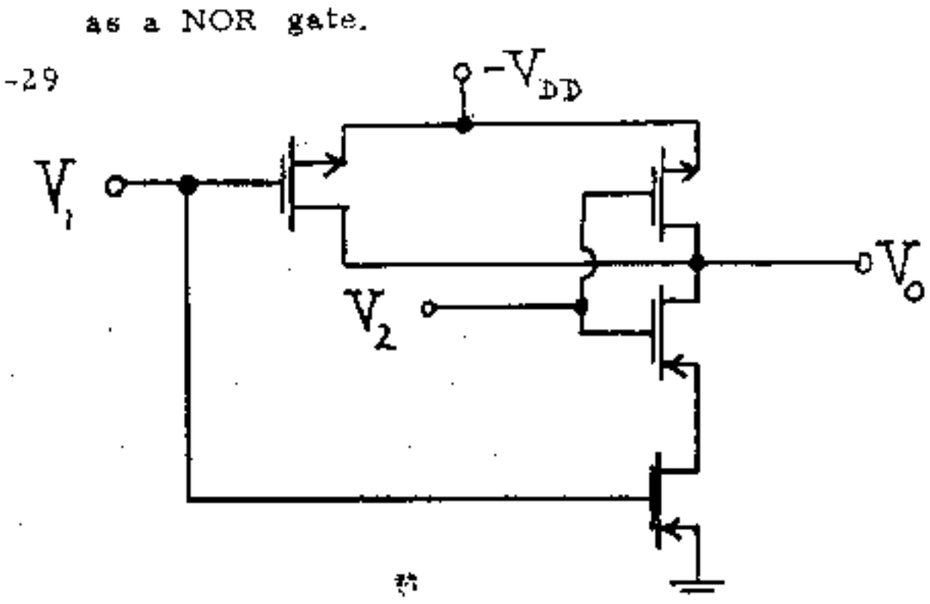

8-31

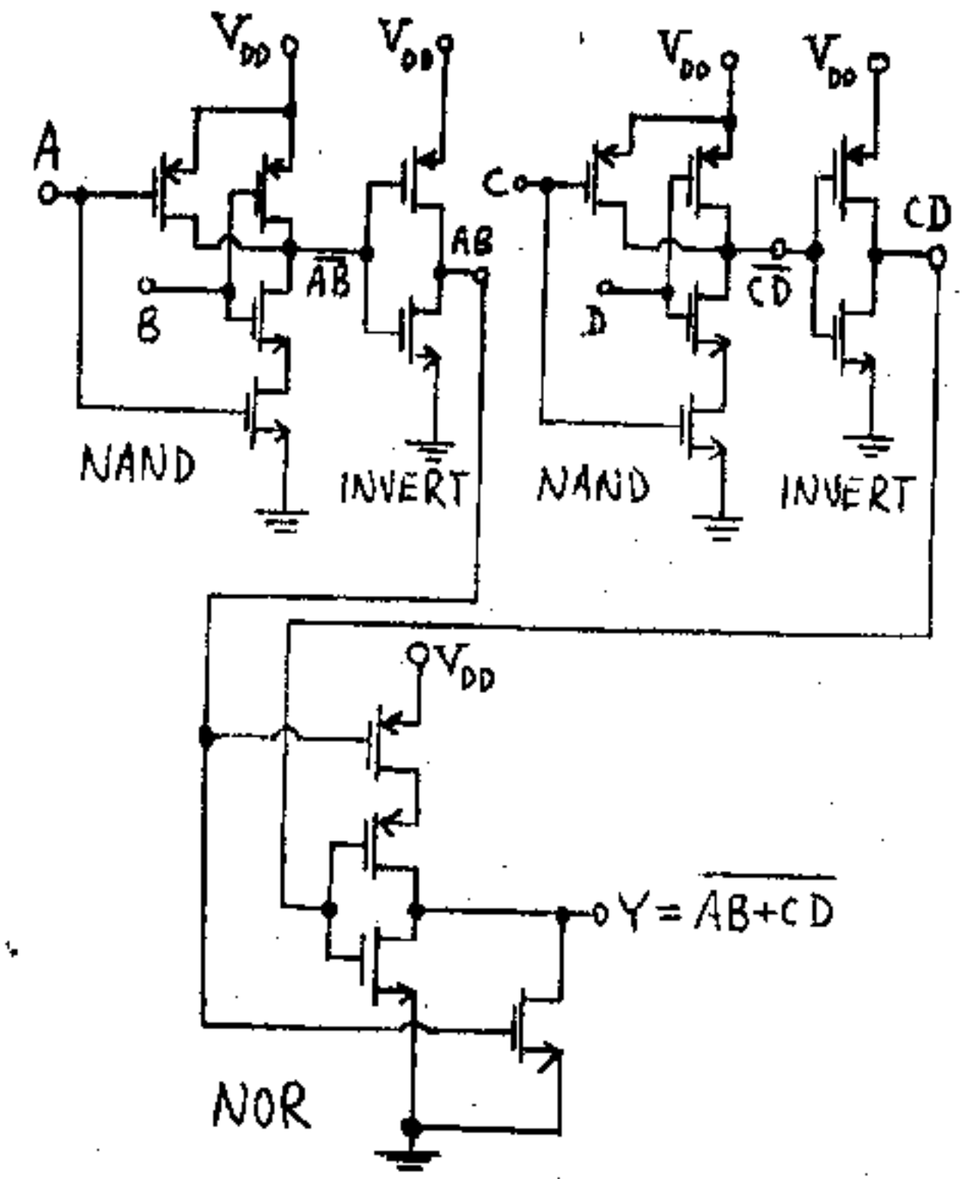

8-32

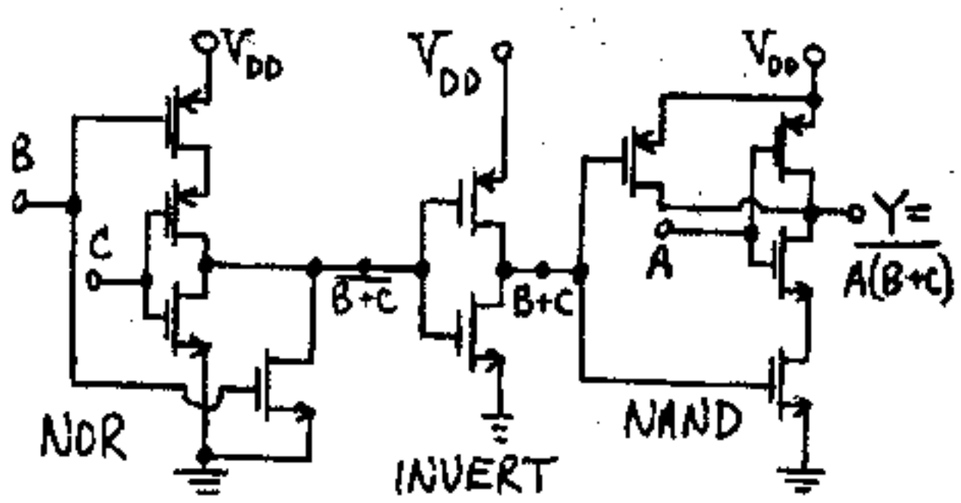

8-33 (a) $Y = \overline{AB} = \overline{A+B}$

(b)

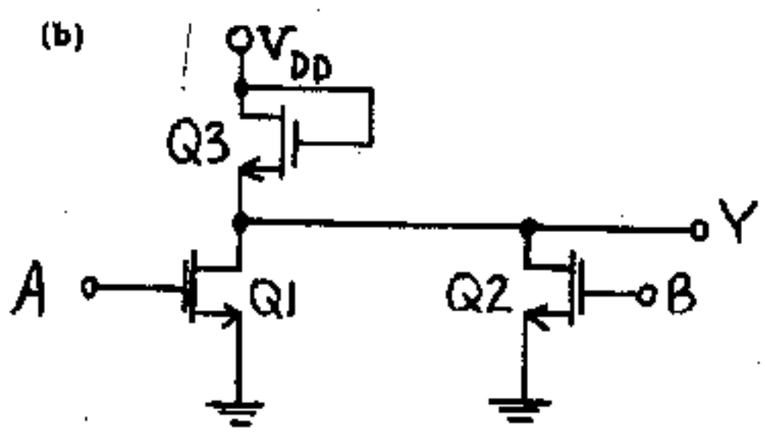

If A=B=1, Q1 and Q2 are ON and Y=0. If A=1 and B=0, Q1 is ON, Q2 is OFF, and Y = 0. Similarly, if A=0 and B=1, Q1 is OFF, Q2 is ON, and Y=0. If A=B=0, Q1 and Q2 are OFF and Y=1. Thus we have a NOR gate.

(c)

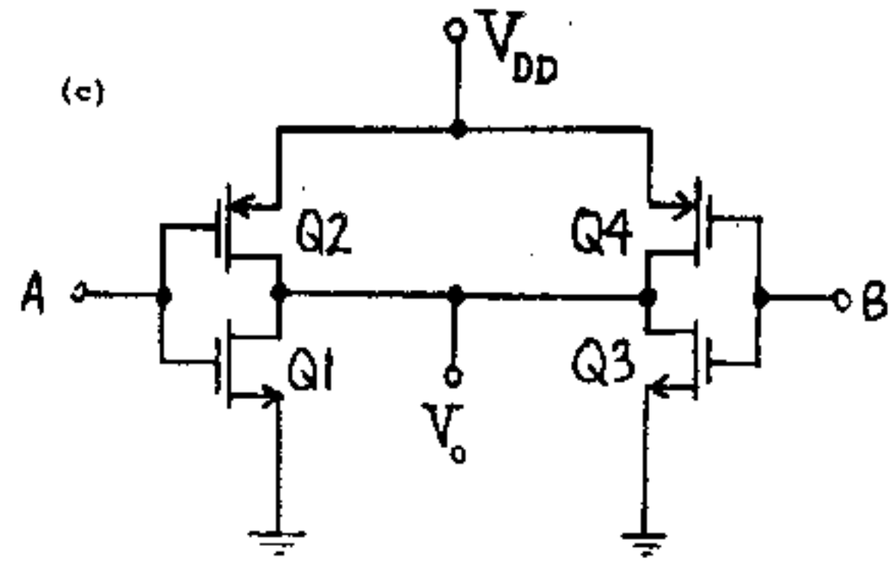

It is not possible to wire-AND the outputs. If A=1 and B=0, Q1 and Q4 are ON. Thus there is a short circuit from V_{DD} to ground, and V_o cannot be determined. Similarly, if A=0 and B=1, Q2 and Q3 are on and the short circuit exists again.

8-34 (a)

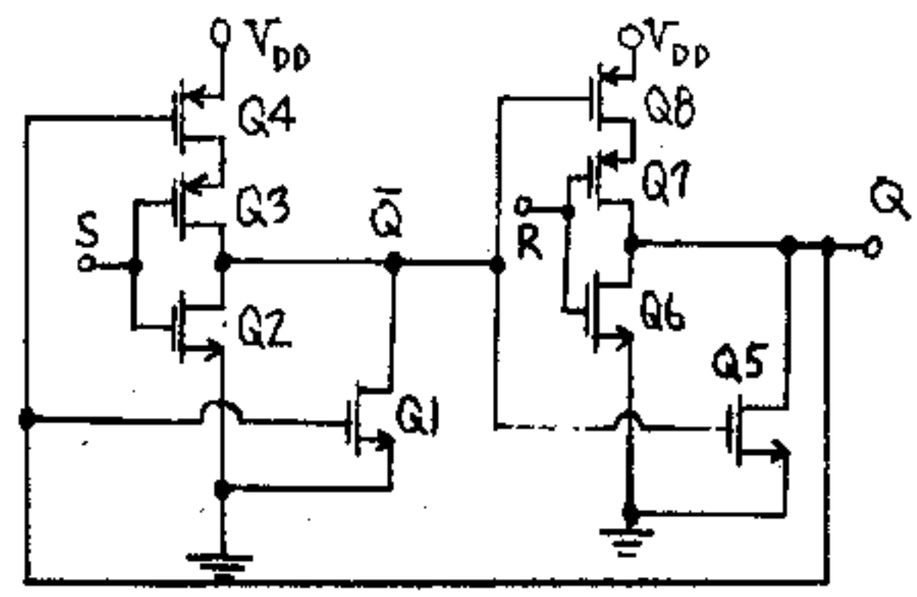

The bistable latch is constructed from cross-coupled NOR gates.

(b) Let S = 1 and R=0. Thus, Q2 and Q7 are ON. Q6 and Q3 are OFF. Since Q2 is ON, $\overline{Q} = 0$. Note that $\overline{Q}$ is the input to Q5 and Q8. Thus, Q5 is OFF and Q8 is ON. Since Q8 and Q7 are ON we confirm Q=1. Q is the input to Q1 and Q4. Thus, Q1 is ON and Q4 is OFF. We confirm $\overline{Q} = 0$ since Q1 and Q2 are ON.

8-35 (a) Let C = +5 V and $\overline{C}$ = -5 V in Fig. 8-28. The input varies sinusoidally from -5 V to +5 V. When v_i=-5 V, Q1 is ON. When v_i= + 5 V, Q2 is ON. When $-5 < v_i < 5$, both Q1 and Q2 are ON. Hence the entire sinusoid appears at the output.

(b) Let C = -5 V and $\overline{C}$ = +5 V. For all values of v_i, Q1 and Q2 are always OFF. Thus, transmission is inhibitted.

(c) Let V_T=2 V: i) Q1 is ON when $v_i+V_T < C$ and is OFF when $v_i+V_T \geq C$. Thus Q1 is ON when $v_i < 5-2 = 3$ V. Q2 is ON when $v_i-V_T > \overline{C}$. Thus, Q2 conducts when $v_i > -5+2=-3$ V. Hence, the entire sinusoid is transmitted to the output. Both Q1 and Q2 conduct for $-3 < v_i < +3$ V. ii) If C=-5 V

and $\overline{C}$ = 5 V, Q1 is ON when $v_i < C - V_T = -5-2 = -7$ V and Q2 is ON when $v_i > \overline{C} + V_T = 5+2 = 7$ V. Thus transmission is inhibitted.

(d) As in part (c), Q1 is ON when $v_i < C - V_T = 5-2 = 3$ V. Q2 is ON when $v_i > \overline{C} + V_T = -5+2 = -3$ V. Thus, the entire sinusoid appears at the output.

(e) Q1 is ON when $v_i < C - V_T = -5-2 = -7$ V. Q2 is ON when $v_i > \overline{C} + V_T = 5+2 = 7$ V

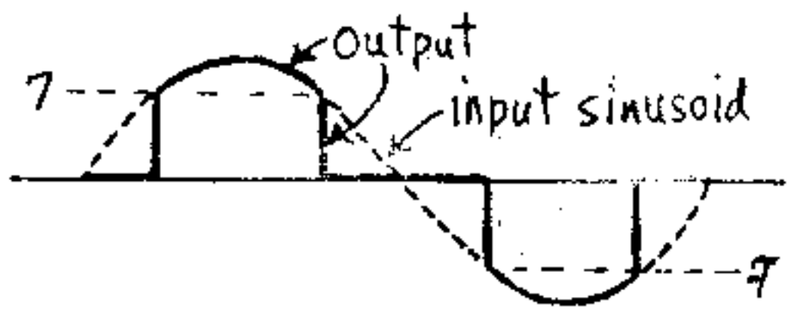

CHAPTER 9

9-1 (a) If either V_1 or V_4 is 0 V (logic 0) or if both are 0 then Q1 and Q4 are OFF. Hence, when ϕ = 10 V, Q2 and Q3 are ON and C charges to 10 V. Hence, V_o = 10 V (logic 1).

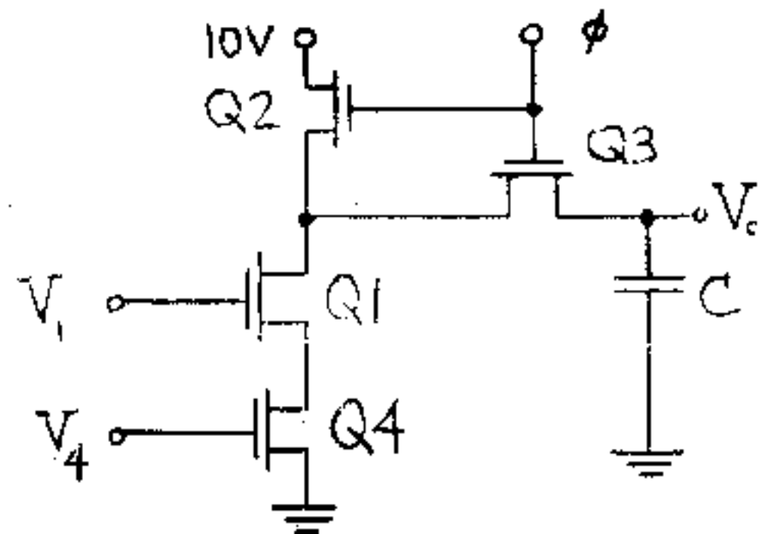

If both V_1 and V_4 = 10 V then both are ON. Hence, when ϕ = 10 V, all four transistors are ON and C discharges to ground through Q1 and Q4 in series. Hence, V_o = 0 (logic 0).

The above arguments are summarized in the truth table which verifies NAND operation.

V_1	V_4	V_o
0	1	1
1	0	1
0	0	1
1	1	0

(b) During the time ϕ = 0 V the power supply is disconnected from the circuit and no power is used even if $V_1 = V_4$ = 10 V. Hence, this circuit dissipates less power than that of Fig. 8-22.

9-2 (a) If either V_1 or V_4 or both equal 10 V (logic 1) then when ϕ = 10 V Q2 and Q3 are ON and C discharges to ground through Q1 or Q4 or both in parallel. Hence V_o = 0 V (logic 0).

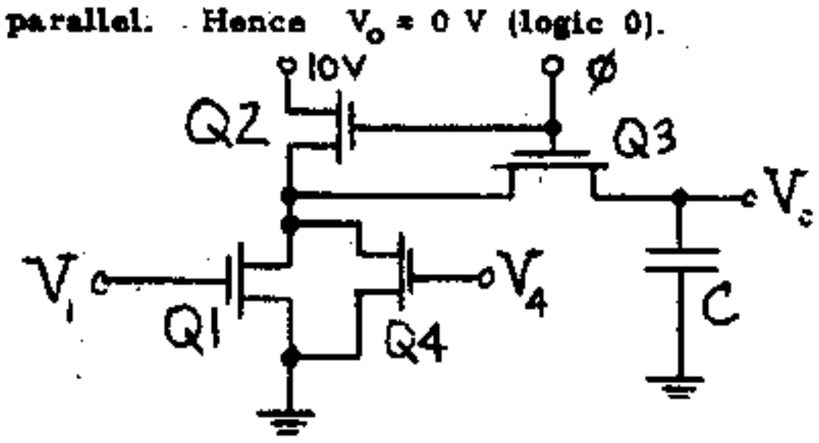

If both V_1 and V_2 = 0 V, they are OFF and C charges to 10 V through Q2 and Q3 if ϕ = 10 V. Hence V_o = 10 V (logic 1). The above arguments are summarized in the truth table which verifies NOR operation.

V_1	V_4	V_o
1	0	0
0	1	0
1	1	0
0	0	1

(b) During the time ϕ = 0 V, the power supply is disconnedted from the circuit and no power is used even for the first three rows in the table. Hence, this circuit dissipates less power than that of Fig. 8-21.

9-3

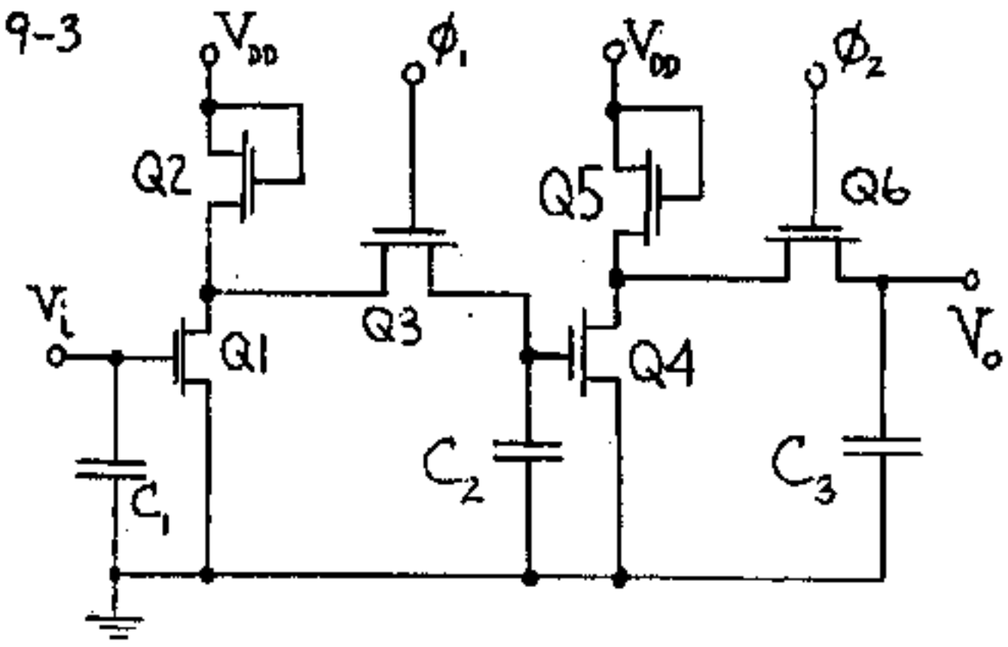

(a) Consider initially, $t = t_1 -$ (Fig. 9-2b), that all capacitors are uncharged because $\phi_1 = \phi_2 = 0$. Then for $t_1 < t < t_2$, $\phi_1 = V_{DD}$ and $\phi_2 = 0$. Hence, C_1 remains uncharged but C_2 charges to V_{DD} through Q2 and Q3. With $V_i = 0$ Q1 is off and C_2 stays at V_{DD}. Hence, there has been an inversion between C_1 and C_2.

Between t_2 and t_3 both $\phi_1 = 0$ and $\phi_2 = 0$ and the capacitors retain their charges. For $t = t_3+$, $\phi_1 = 0$ and $\phi_2 = V_{DD}$. Hence C_1 and C_2 retain their charges but C_3 is discharged to ground through Q4 and Q6. Thus an inversion takes place through Q4. When $t = t_4+$, $V_o = V_i = 0$ and a shift has taken place through the stage.

Now start with $V_i = V_{DD}$ so that C_1 is charged to V_{DD}, but C_2 and C_3 are uncharged. For $t_1 < t < t_2$ $\phi_1 = V_{DD}$ and $\phi_2 = 0$ and C_2 is shunted by the ON transistors Q1 and Q3 in series. Hence C_2 is at 0 V. Since $V_i = V_{DD}$ there is an inversion between C_1 and C_2. Between t_2 and t_3 the voltages on C_1 and C_2 are unchanged because $\phi_1 = 0$ and hence Q3 is OFF. However, for $t_3 < t < t_4$, $\phi_2 = V_{DD}$ and Q6 is ON. However, since C_2 is at 0 V then Q4 is OFF and C_3 charges to V_{DD} through Q5 and Q6. Hence at $t = t_4+$, $V_o = V_{DD}$ and $V_i = V_{DD}$. Hence, again in one cycle the state of V_i has shifted to V_o.

(b) In Fig. 9-2 when ϕ_1 and ϕ_2 are both 0 then no steady-state power is supplied to the circuit because Q2 and Q5 are OFF. However, with unclocked loads as above even if $\phi_1 = \phi_2 = 0$ power will be wasted in Q1 and Q2 if $V_i = V_{DD}$ or in Q4 and Q5 if $V_i = 0$ (so that the voltage across C_2 is V_{DD}). Hence, more power is dissipated in this circuit than in that of Fig. 9-2.

9-4 Assume that initially all capacitors are uncharged and $V_i = 0$. At $t = t_1-$, $\phi_1 = \phi_2 = 0$ and all transistors are OFF and the capacitors remain uncharged. For $t_1 < t < t_2$ $\phi_1 = V_{DD}$ and $\phi_2 = 0$. Hence Q0 is ON and C_o charges to $V_i = 0$. Q1 is OFF Q2 is ON and C_1 charges to V_{DD} (an inversion through Q1). Since $\phi_2 = 0$ then Q3 and Q5 are OFF and C_2 and C_3 remain uncharged. Between t_2 and t_3 the capacitor voltages remain unchanged because $\phi_1 = \phi_2 = 0$.

For $t_3 < t < t_4$ $\phi_1 = 0$ and $\phi_2 = V_{DD}$ so that C_o remains at 0 V and C_1 at V_{DD}. But now Q3 is ON and the C_2 is placed in parallel with C_1. The voltage V across the parallel combination is given by Eq. (9-1) and if $C_1 \gg C_2$ then this voltage is approximately $V = V_{DD}$. Hence Q4 and Q5 are ON and C_3 discharges to 0. Hence $V_o = V_i = 0$ and at the end of one cycle the input is shifted to the output.

Now assume that $V_i = V_{DD}$. For $t_1 < t < t_2$, $\phi_1 = V_{DD}$ and $\phi_2 = 0$. Hence Q0 is ON and C_o charges to $V_i = V_{DD}$. Q1 is ON, Q2 is ON and C_1 remains at 0 V (an inversion through Q1). As discussed above the capacitors C_2 and C_3 remain at 0 V until t_3-.

For $t_3 < t < t_4$ $\phi_1 = 0$ and $\phi_2 = V_{DD}$ so C_o remains at V_{DD} and C_1 at 0 V. But now Q3 is ON and C_2 is placed in parallel with C_1 and hence remains at 0 V. Hence Q4 is OFF but Q5 is ON and V_o charges to V_{DD}. Hence, in one cycle $V_i = V_{DD}$ has shifted to the output, $V_o = V_{DD}$.

(b) The inverters are ratioed. For example, with both Q4 and Q5 ON the output V_o (which was assumed to be 0 V) is actually equal to V_{DD} times the ON resistance of Q4 divided by the ON resistances of Q4 and Q5 in series.

9-5

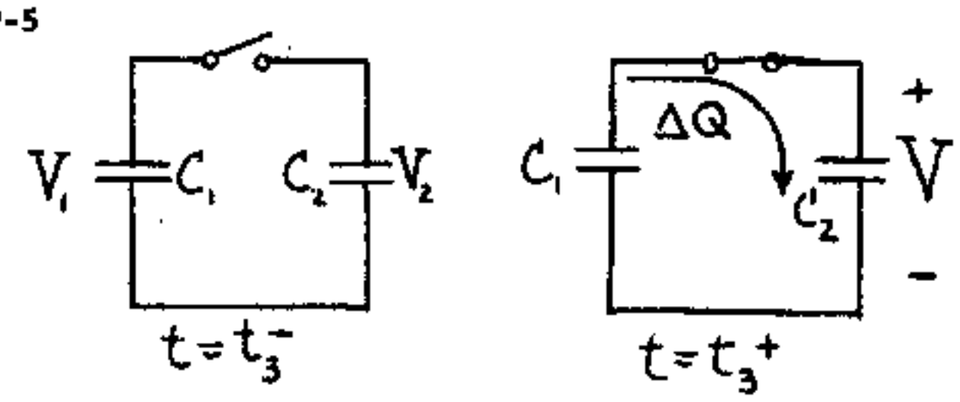

ΔQ = charge leaving C_1 and going to C_2. Hence, the drop in voltage across C_1 is $\Delta Q/C_1$ and the increase across C_2 is $\frac{\Delta Q}{C_2}$. Hence

$$V = V_1 - \frac{\Delta Q}{C_1} = V_2 + \frac{\Delta Q}{C_2}$$

$$\Delta Q\left(\frac{1}{C_1} + \frac{1}{C_2}\right) = V_1 - V_2 \quad \text{or} \quad \Delta Q = \frac{C_1 C_2}{C_1 + C_2}(V_1 - V_2)$$

$$\text{and} \quad V = V_1 - \frac{C_2}{C_1 + C_2}(V_1 - V_2) = \frac{C_1 V_1 + C_2 V_2}{C_1 + C_2}$$

9-6 (a) In the interval t_1-t_2, $\phi_1 = V_{DD}$ (logic 1) and $\phi_2 = 0$ (logic 0). Hence Q2 is OFF and Q1 is ON so that C charges to V_{DD} through Q1.

Between t_2 and t_3 both ϕ_1 and ϕ_2 are at 0 V so that Q1 and Q2 are OFF, and C maintains the voltage V_{DD}.

Between t_3 and t_4, $\phi_1 = 0$ and $\phi_2 = V_{DD}$ so that Q1 is OFF and Q2 is ON. If $V_i = 0$ then Q3 is OFF, then the current in Q2 is zero and C_3 can not discharge. Hence, $V_o = V_{DD}$. On the other hand if $V_i = V_{DD}$ then Q3 is ON and C discharges to ground through Q2 and Q3 in series so that $V_o = 0$. Since for $V_i = 0$, $V_o = V_{DD}$ and for $V_i = V_{DD}$, $V_o = 0$ the circuit is an inverter. Between t_4 and t_5 both Q1 and Q2 are OFF and hence the NOT operation takes place over one clock period.

(b) Since the output does not depend upon the ratio of the resistances of MOSFETs this is a ratioless inverter.

(c) See the figure.

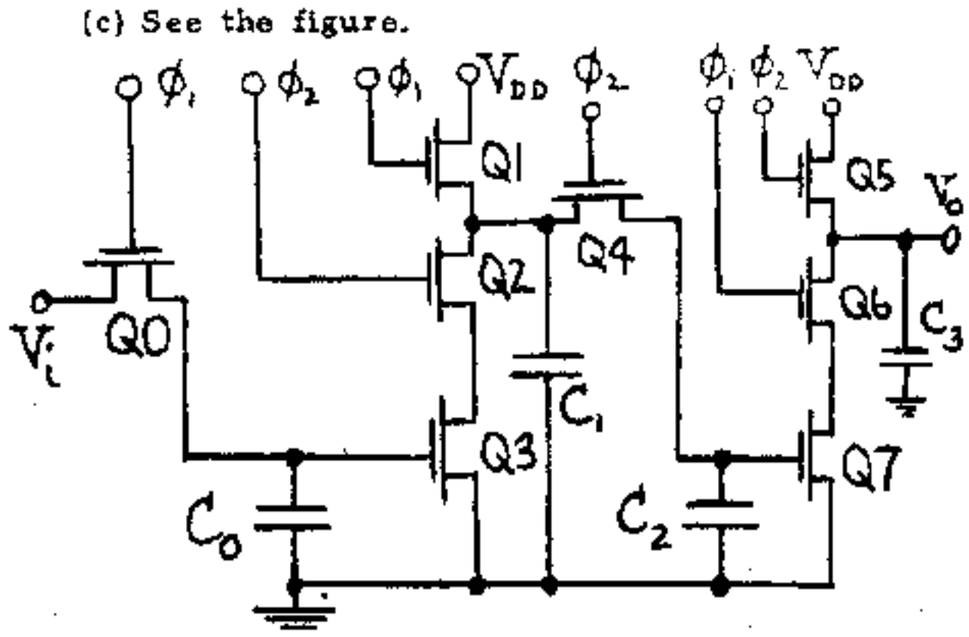

(d) Between t_1 and t_2 Q0, Q1, and Q6 are ON. Hence, V_i appears across C_0 at the input to Q3. Since Q4 is OFF the two inverters are isolated. Capacitor C_1 is precharged to V_{DD}. As explained in part (a), during the interval t_3-t_4 when $\phi_2 = V_{DD}$ an inversion takes place and C_1 is left with the complement of V_i. Since Q4 is also ON when $\phi_2 = V_{DD}$, then for $C_1 \gg C_2$ the voltage on C_1 transfers to C_2 [Eq. (9-1)]. Also during the time $\phi_2 = V_{DD}$, Q5 is ON and precharges C_3 to V_{DD}. Between t_4 and t_5 none of the capacitor voltages change because $\phi_1 = \phi_2 = 0$ and there can be no current flow. Finally, at $t = t_5+$ when $\phi_1 = V_{DD}$ and $\phi_2 = 0$, the voltage on C_2 is transferred to V_o but inverted. The end result is that the value of V_i during a pulse ϕ_1 is transferred to V_o at a time one period later.

9-7 First note that when $\phi_1 = \phi_2 = \phi_3 = \phi_4 = 0$ that the voltages on capacitors C_1 and C_2 remain constant because Q1, Q2, Q3, and Q4 are OFF.

When $\phi_1 = V_{DD}$ Q1 is ON and Q2, Q4, and Q5 are OFF. C_1 is precharged to V_{DD}. When $\phi_2 = V_{DD}$, Q2 is ON and Q1, Q4, and Q5 are OFF. If $V_i = 0$ then Q3 is OFF and C_1 remains charged to V_{DD}. On the other hand if $V_i = V_{DD}$ then Q3 is ON and C_2 discharges to 0 through Q2 and Q3. Hence, during $\phi 2$ an inversion takes place because the voltage across C_1 is the complement of V_i.

During $\phi_3 = V_{DD}$ and ϕ_5, Q1 and Q2 are OFF and C_1 retains its voltage. During $\phi_3 = V_{DD}$ Q4 is ON and Q5 is OFF and C_2 is precharged to V_{DD}. When $\phi_4 = V_{DD}$, then Q5 is ON and Q4 is OFF and as explained in the preceeding paragraph Q4, Q5, and Q6 form an inverter and V_o takes on a value which is the complement of the voltage across C_1. Hence, at the end of a period, when ϕ_1 again becomes V_{DD} the output V_o is the complement of what V_i was one cycle time earlier. In other words, the circuit is a 1-bit delay line, or 1-bit shift register.

9-8 (a) A 4-kb ROM contains $4096 = 64 \times 64$ bits. The X decoder contains 6 bits because $64 = 2^6$.

(b) Since there are 4 output bits and these must be obtained from 64 columns then we need four 16-to-1 selectors. To decode these selctors requires 4 addresses since $16 = 2^4$.

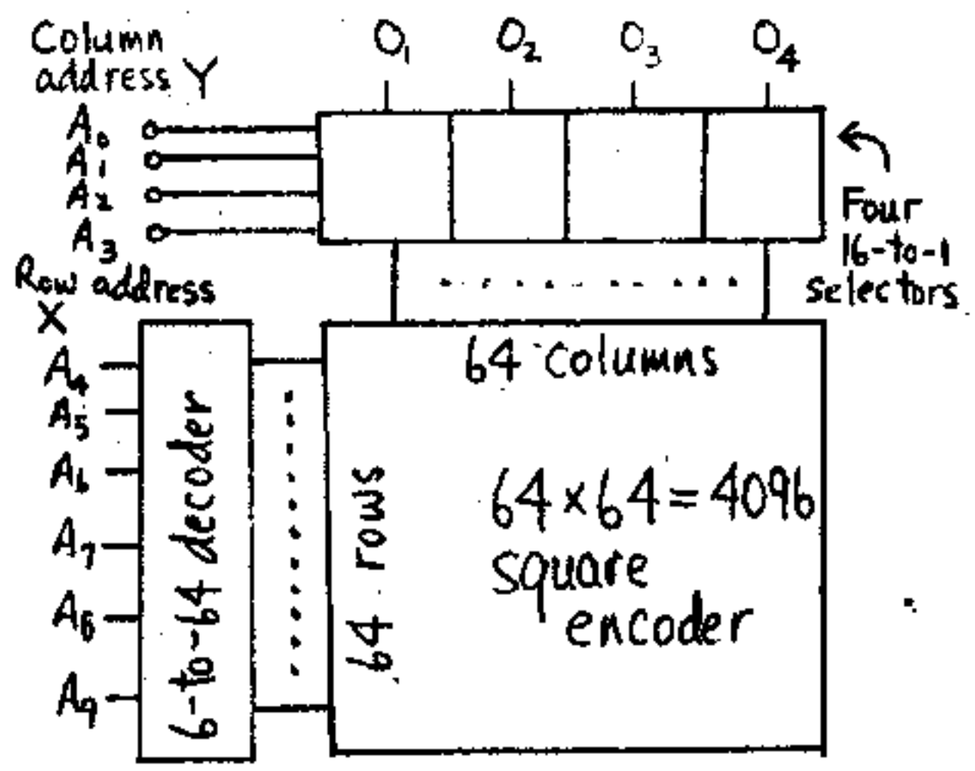

9-9 (a) Since $128 = 2^7$ then there are 7 bits in the X address.

(b) There are $8192/128 = 64$ columns. Since there are 8 output bits then we must use eight 8-to-1 line selectors. To decode these selectors requires a 3-bit code or the Y address has 3 bits.

(c) Since $64 = 2^6$ then there are 6 bits in the X decoder. There are $8192/64 = 128$ columns. For 8 output bits we must use eight 16-to-1 selectors. To decode these selectors requires a 4-bit code or the Y address is 4 bits.

(d) There $8192/8 = 1024$ words of 8 bits each. To decode 1024 words requires a 10-bit decoder.

The sum of the bits in X and Y in (a) and (b) is $7 + 3 = 10$. The sum of the address bit in (c) is $6 + 4 = 10$, which checks.

9-10 (a) This is "word expansion", where the length of the word is increased from 8 to 16. The same address is applied to both ROMs simultaneously. The 8 lowest bits are obtained from one chip and the 8 more significant bits are taken from the second package.

(b) This is "address expansion". Use a 1-to-2 line decoder (a FLIP-FLOP) and OR-tie the 3-state output stages as indicated.

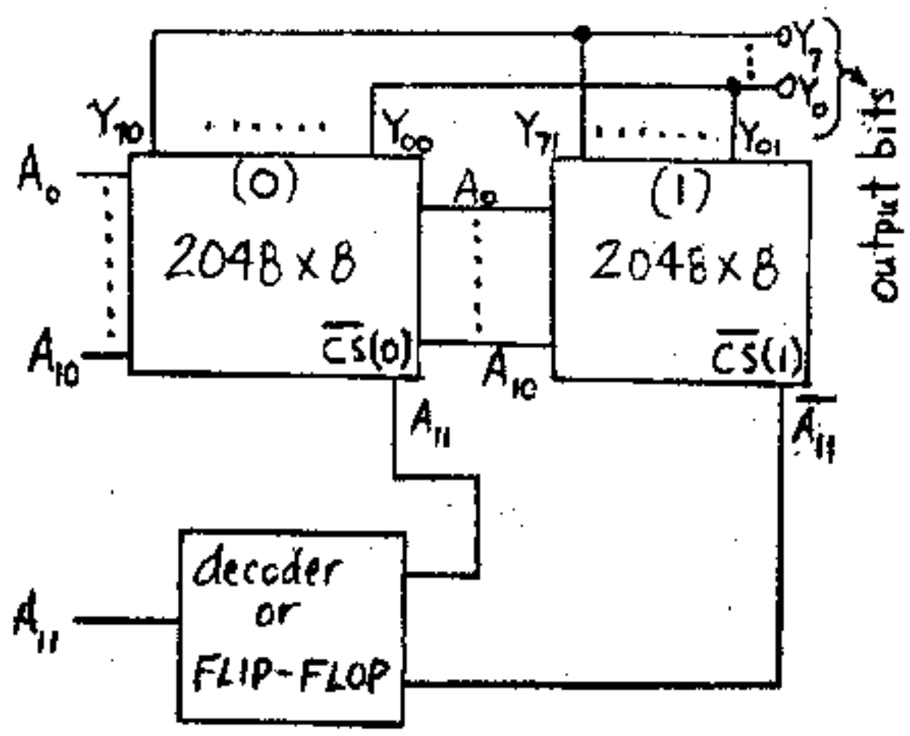

The address $A_{10} \ldots A_0$ is applied in parallel to both chips, whose outputs are OR-tied together. This address generates 2048 words in each chip. If the twelvth address $A_{11} = 0$ then the chip select CS(0) is enabled and CS(1) is inhibited, because $CS(0) = 1$ and $CS(1) = 0$. Hence, the lower-significant bits $Y_{70} \ldots Y_{00}$ appear at the output. On the other hand, if $A_{11} = 1$ then chip 0 is inhibited and chip (1) is enabled and the higher-significant bits $Y_{71} \ldots Y_{01}$ appear at the output.

Note: In place of the FLIP-FLOP a simple inverter can be used. Thus

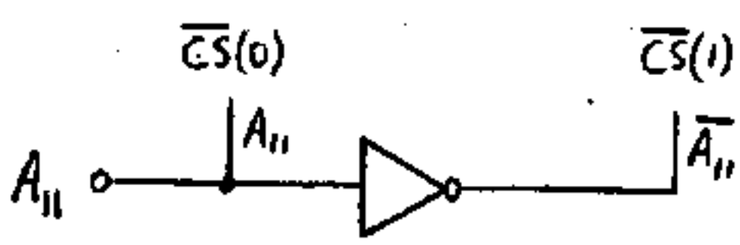

9-11 This is an example of address expansion and is an extension of Fig. 6-28.

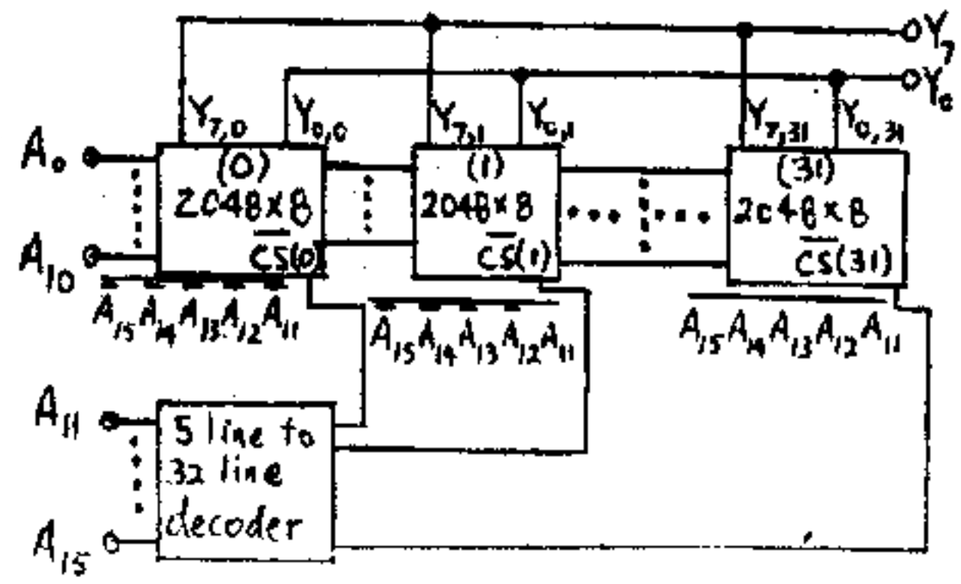

Note that there are 8 outputs and each output comes from one of the 32 chips (with tri-state outputs) depending upon which chip is selected (CS = 1). There are 16 address inputs. The total number of bits is $8 \times 2^{16} = 2^{19}$ obtained from 32 16-kb ROMs or a total of $2^5 \times 2^{14} = 2^{19}$ bits. The total number of 8-bit words is $2048 \times 32 = 2^{11} \times 2^5 = 2^{16}$.

9-12 (a)

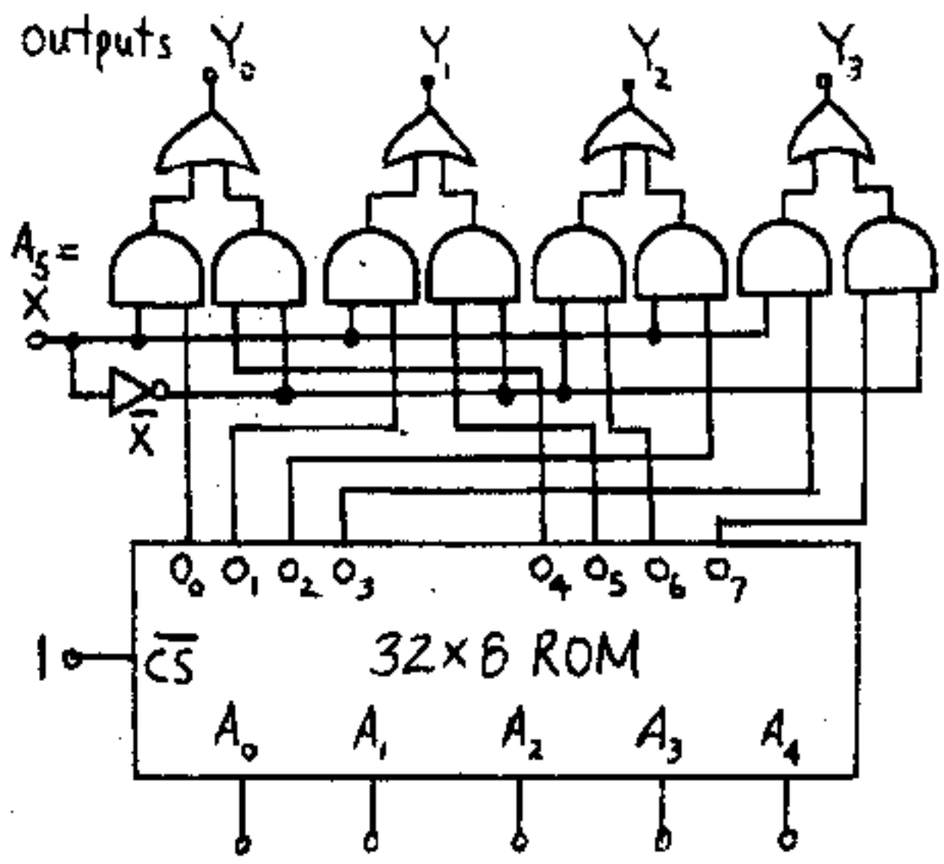

There are 6 inputs $A_0 \ldots A_5$ to give $2^6 = 64$ words.

(b) Expand the system in (a) by connecting A_0 on one chip to A_0 on the other, A_1 on one chip to A_1 on the other etc. In other words address both chips in parallel. Use the above 4 AND-OR gates. Connect the outputs of the two chips in parallel. Thus, O_k on one chip goes to O_k on the other. However add one more address A_6 and apply A_6 to the chip select $\overline{CS}$ input of one chip and apply $\overline{A}_6$ to $\overline{CS}$ of the second chip.

When $A_6 = 1$ the system is exactly as pictured above since the second chip is inhibited. If $A_6 = 1$ the first chip is inhibited and the second is enabled. Since we have 7 addresses $A_0 \ldots A_6$

then we have $2^7 = 128$ words of 4 bits each. When $A_5 = 1$ and $A_6 = 1$ then $O_0 \ldots O_3$ of the first chip appear at the output, for $A_5 = 0$ and $A_6 = 1$ then $O_4 \ldots O_7$ of the first chip are the output, if $A_5 = 1$ and $A_6 = 0$ then $O_0 \ldots O_3$ of the first chip are at the output and when $A_5 = 0$ and $A_6 = 0$ the outputs are $O_4 \ldots O_7$ of the second chip.

9-13 (a)

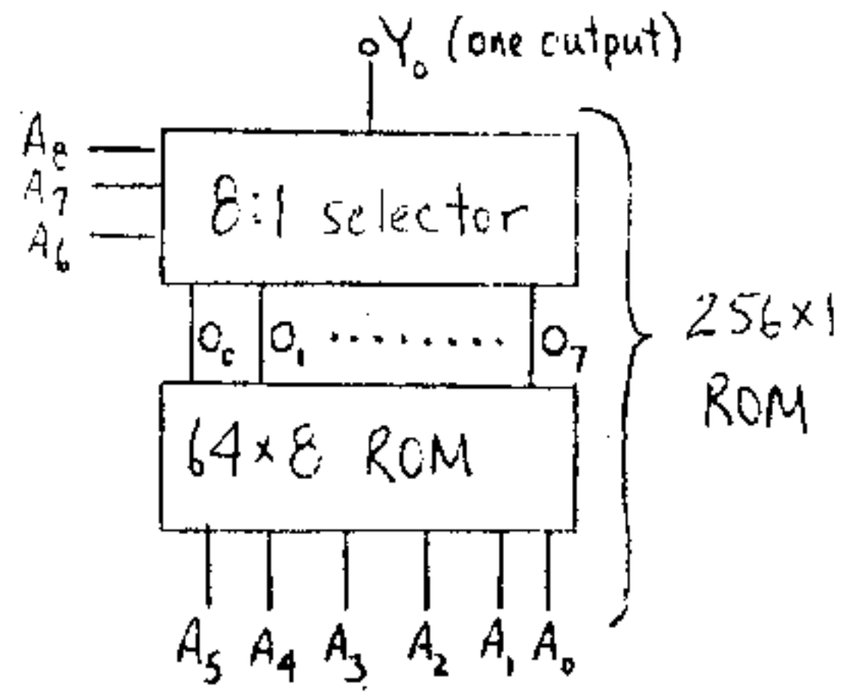

Note that 6 addresses $A_0 \ldots A_5$ are needed for 64 words. Three addresses $A_6 A_7 A_8$ are needed to multiplex 8 inputs on one output line. The total number of addresses is $6 + 3 = 9$ giving $2^9 = 512$ words of 1 bit each.

(b) We now must use two multiplexers as follows

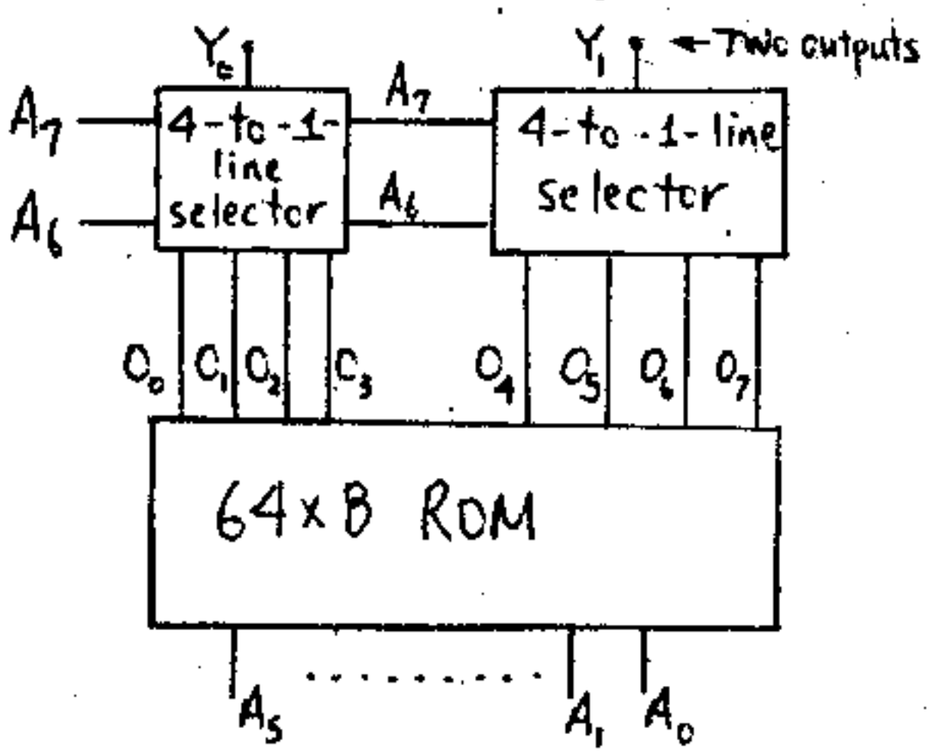

Note that to multiplex 4 inputs onto one line takes two address bits A_6 and A_7. The number of address combinations $A_0 \ldots A_7$ is $2^8 = 256$ or 256 words of 2 bits each is obtained.

9-14

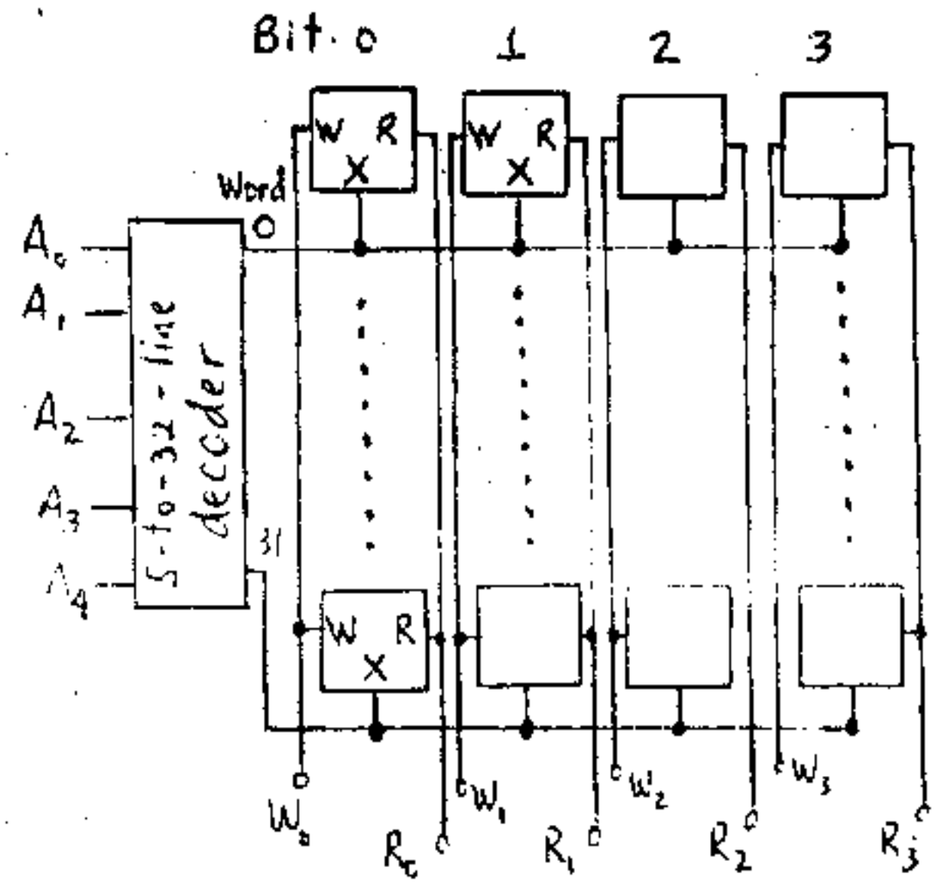

A 5-input address $A_0 A_1 \ldots A_4$ to the decoder gives us 32 word lines. Each line has 4 bits. These are written in at the terminals W_0, W_1, W_2 and W_3 and are read out at terminals R_0, R_1, R_2, and R_3. The proper word must be addressed in order to be read or written

9-15 (a) To address 1024 words requires a 10-bit decoder with 1024 outputs. Hence there are 1024 NAND gates and each gate has 10 inputs.

(b) The square array for 1024 words is 32 x 32. Hence each decoder has 5 inputs and 32 outputs. The total number of AND gates is 32 + 32 = 64 and each has 5 inputs.

Note the tremendous savings in gates relative to linear addressing.

(c) For the 64 lines we need 64 gates, each with 6 inputs and for the 16 lines we need 16 gates each with 4 inputs. The total number of gates is 80. Hence, the organization in (b) is best.

9-16 (a) The first ten least significant addresses gives the word and the next two give the chip. Thus

Chip Word = 1100101011 = 512 + 256+32+8+2+1 = 811

Chip#=01 = 1

Hence, the decoded word is 1024 + 811 = 1835

(b) Chip Word = 1000010110 = 512+16+4+2 = 534

Chip#=11 = 3

Hence, decoded word is (3)(1024) + 534 = 3606

(c) Since 2600 = 2 x1024 + 552 we must decode word 552 on chip 2. Hence $A_{11} = 1$ and $A_{10} = 0$

$552 = 512 + 32 + 8 = 2^9 + 2^5 + 2^3$ or $A_9 = A_5 = A_3 = 1$

Hence the decoder address is 101000101000

9-17

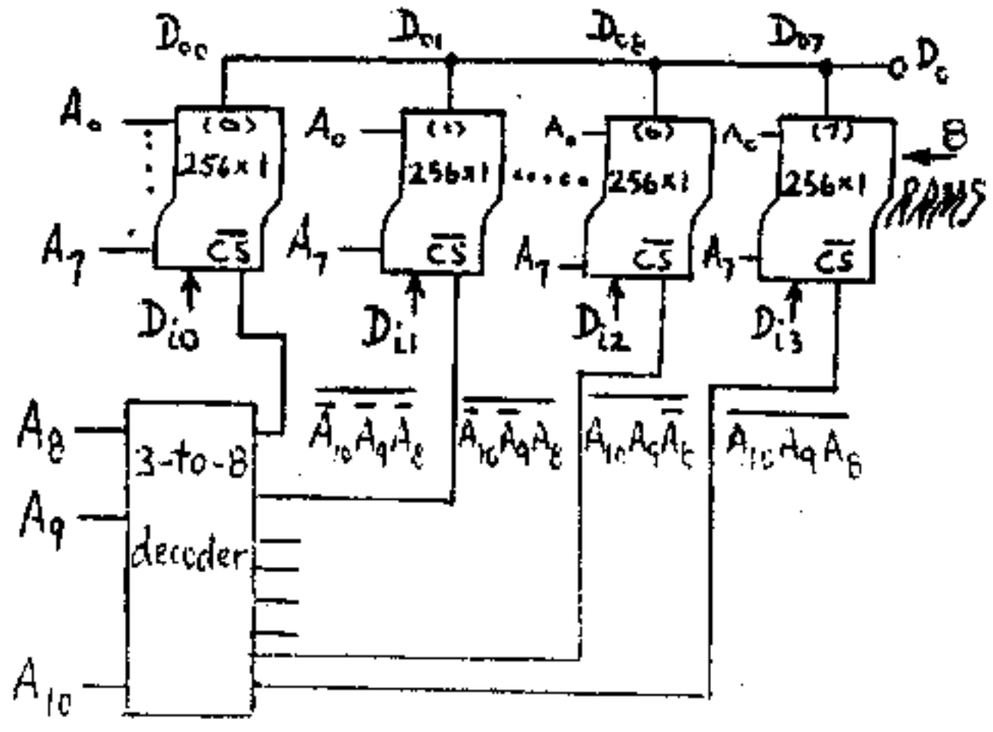

The system sketched expands 256×1 RAMs into a 2048×1 RAM. The explanation of the operation of this configuration parallels that in the text for Fig. 9-19. For example, if $A_{10} = 0$, $A_9 = 0$ and $A_8 = 1$, then $\overline{CS} = 1$ for chip (1) only is selected and $D_0 = D_{01}$ which has 256 values for the 256 possible addresses $A_7 \ldots A_0$. To other 7 chips are selected for different addresses $A_{10}A_9A_8$, giving a total output of $8 \times 256 = 2048$ words, of 1 bit each.

There are three more identical systems for a total of 4 bits per word to give a 2048×8 RAM. Each subsystem uses the same 8 addresses ($A_7 \ldots A_0$) for the 256×1 RAMs and the same 3-to-8 decoder addressed by $A_{10}A_9A_8$. Note: Only one 3-to-8 decoder need be added externally for all $8 \times 4 = 32$ 256×1 RAMs. There are 32 data inputs and 4 data outputs.

9-18 16 kb = 16,384 and since 131,072/16,384 = 8 then we need 8 chips for the word expansion. Proceeding as in Fig. 9-19 we use a 3-line-to-8-line decoder to select each of the 8 chips. To decode each array of 16-kb words requires 14 address inputs. Thus

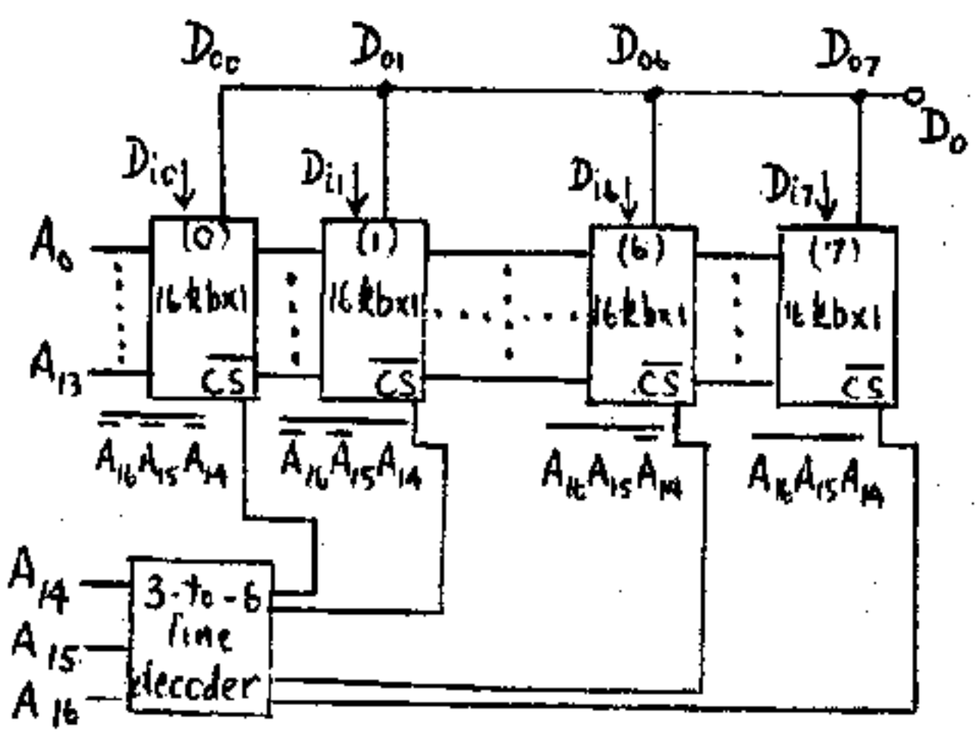

For all possible addresses $A_{16} \ldots A_1A_0$ we obtain $2^{17} = 131{,}072$ words, of 1 bit each. Hence, the above array of eight 16 kb ×1 chips is repeated 4 times in order to obtain 4 bits per word. The same 3-to-8 line decoder is used for each array, so that the same address $A_{16} \ldots A_1A_0$ is applied simultaneously to all chips. Each array has an independent output $D_o(0)$, $D_o(1)$, $D_o(2)$ and $D_o(3)$ and these are read in parallel at a given address to give the 4 bits of the word corresponding to that address. The number of data inputs is $8 \times 4 = 32$.

9-19

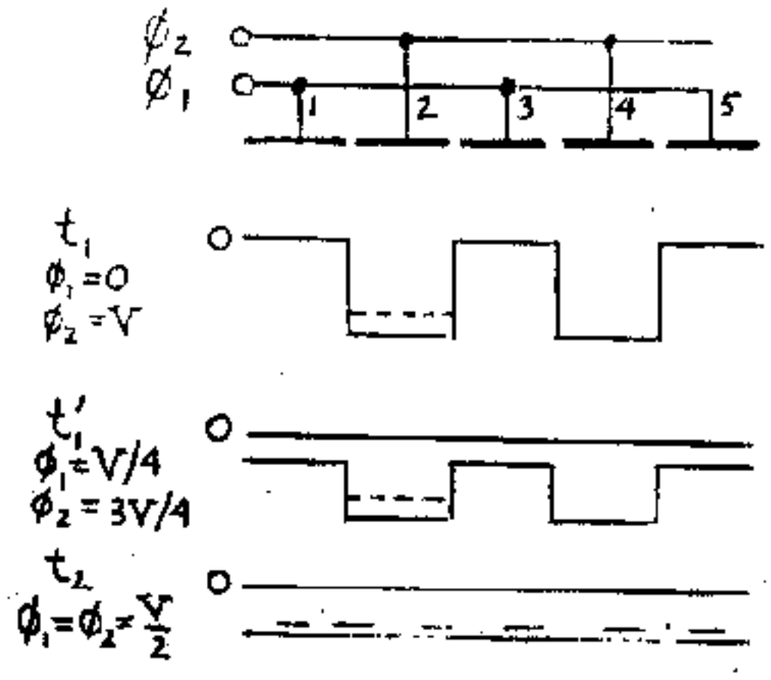

At t_1 wells are formed under even electrodes. Note t_1 and t_2 are the times shown in Fig. 9-30, while t_1' is half way between t_1 and t_2. We assume that initially charge is stored under E_2. As time increases the potential ϕ_1 increases and ϕ_2 decreases so that the potential energy well depth decreases. At $t = t_2$ there are no wells and hence the charge is no longer trapped but can diffuse anywhere in the channel. At $t = t_3$ wells are again formed; now under the odd electrodes as follows:

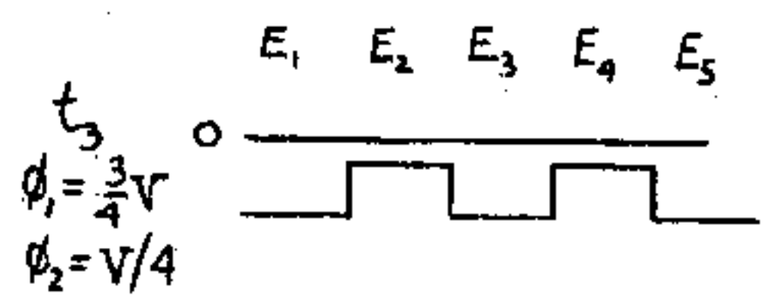

However, whether the charge is trapped under E_1 or E_3 or elsewhere is indeterminate.

9-20 (a) One cell consists of two electrodes. Hence, area = $16 \times 16 = 256\ \mu m^2 = \frac{256}{(25.4)^2}$ mil^2 = 0.397 mil^2

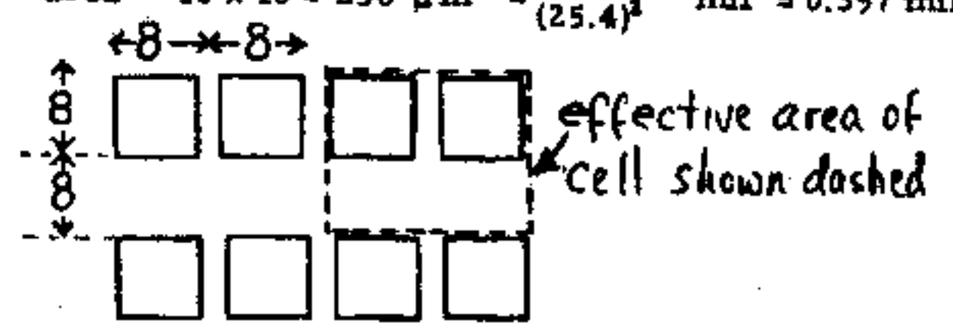

(b) Area of chip = 218x235 = 51230 mil²

Area of memory cells = 0.397x65,536 = 26,018 mil²

Fraction of area occupied by memory cells is

$\frac{26,018}{51,230} = 0.508$

The fraction occupied by auxiliary circuits = 1-0.508

= 0.492

9-21

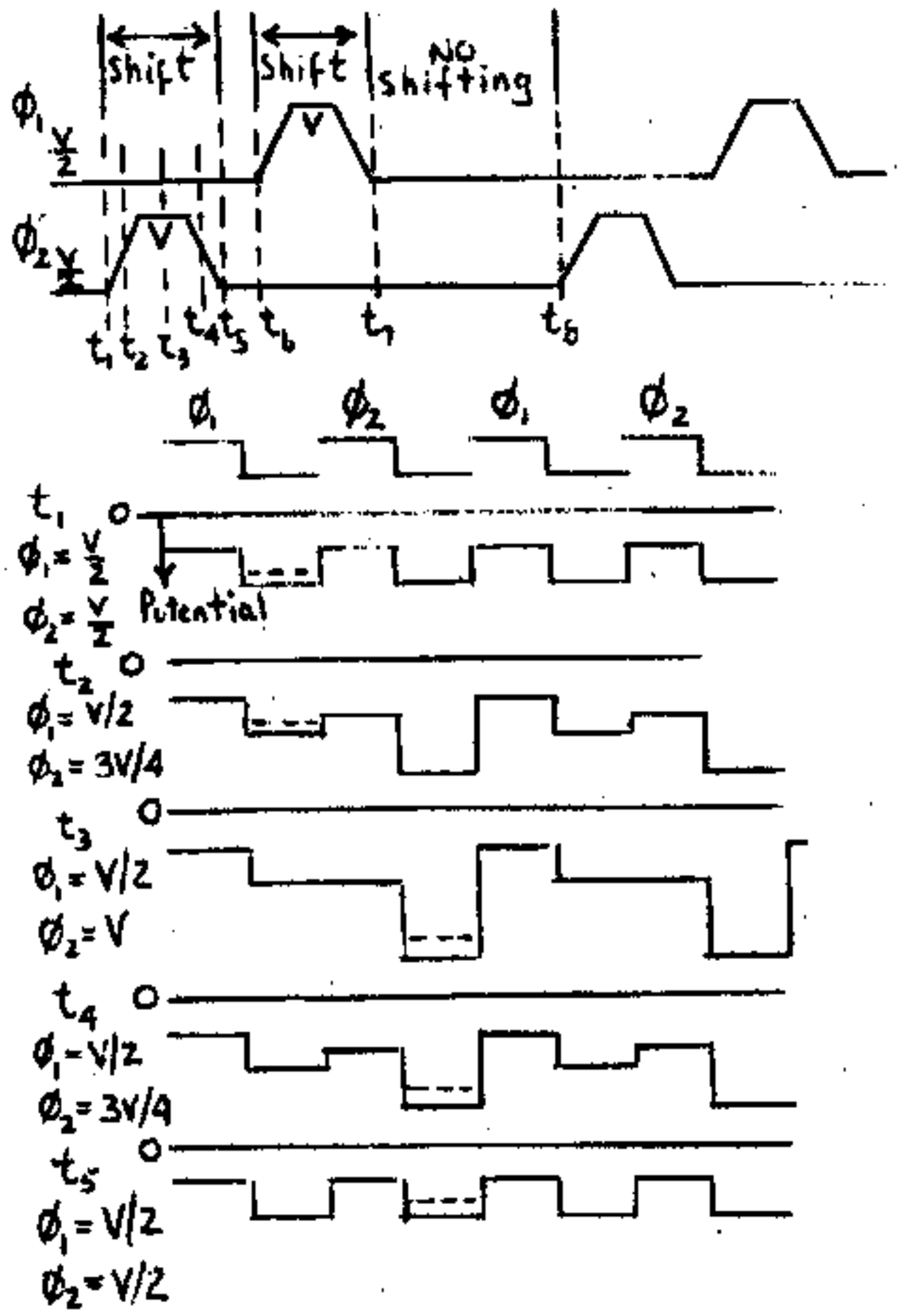

9-22

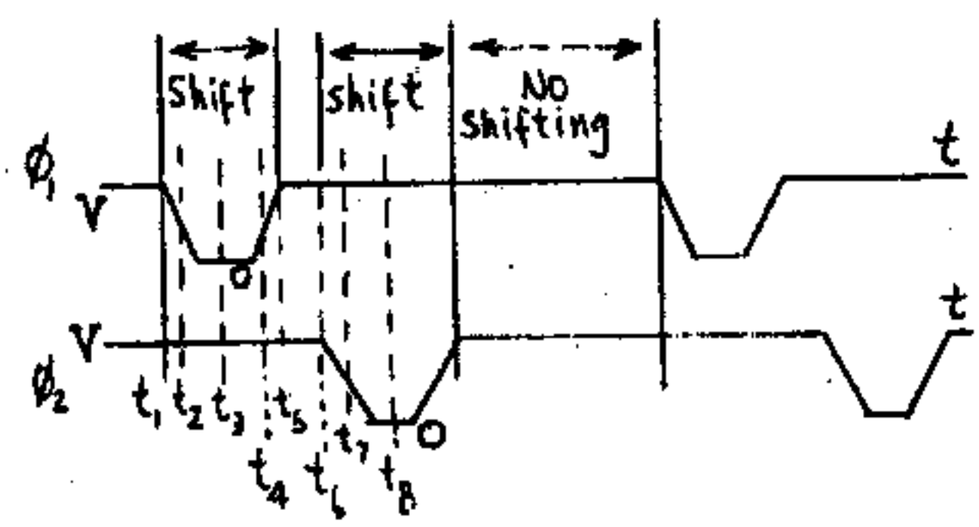

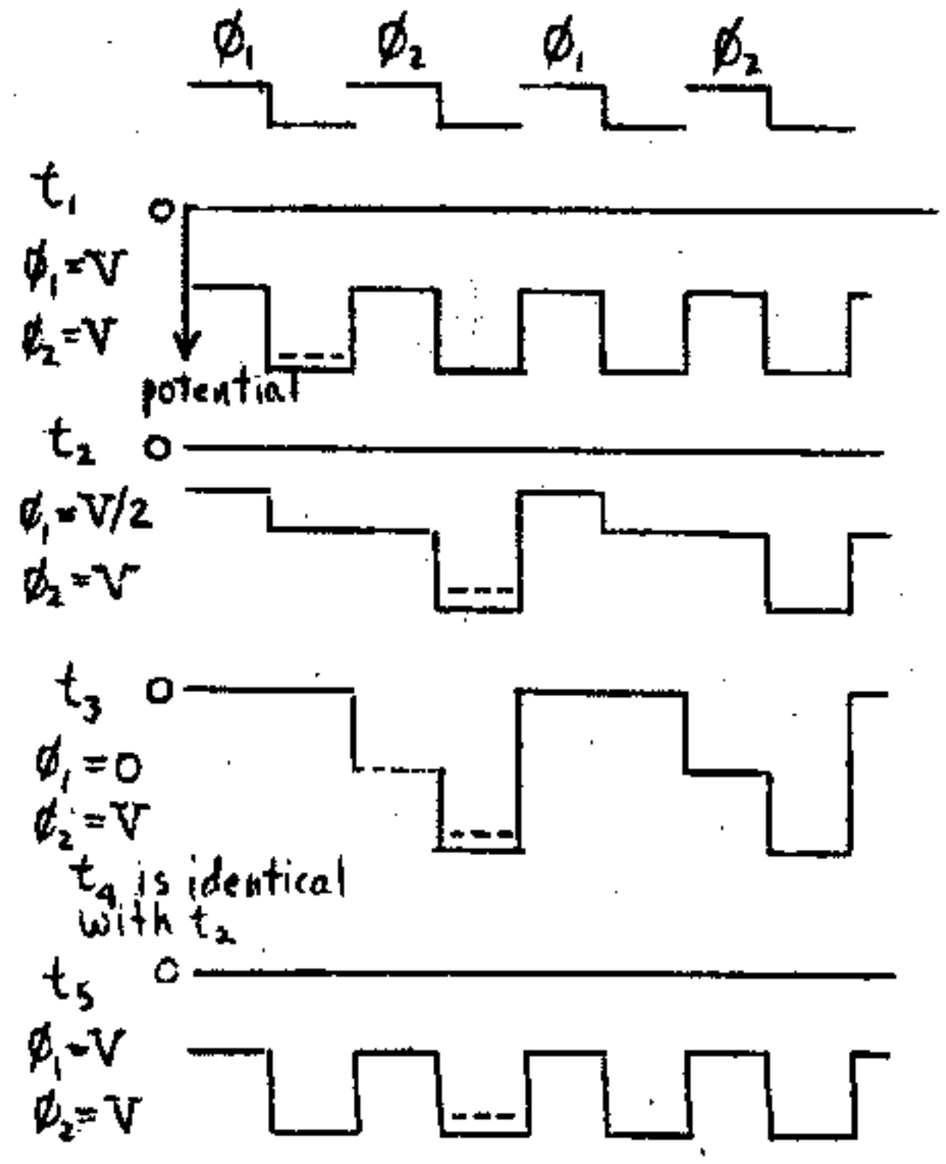

9-23

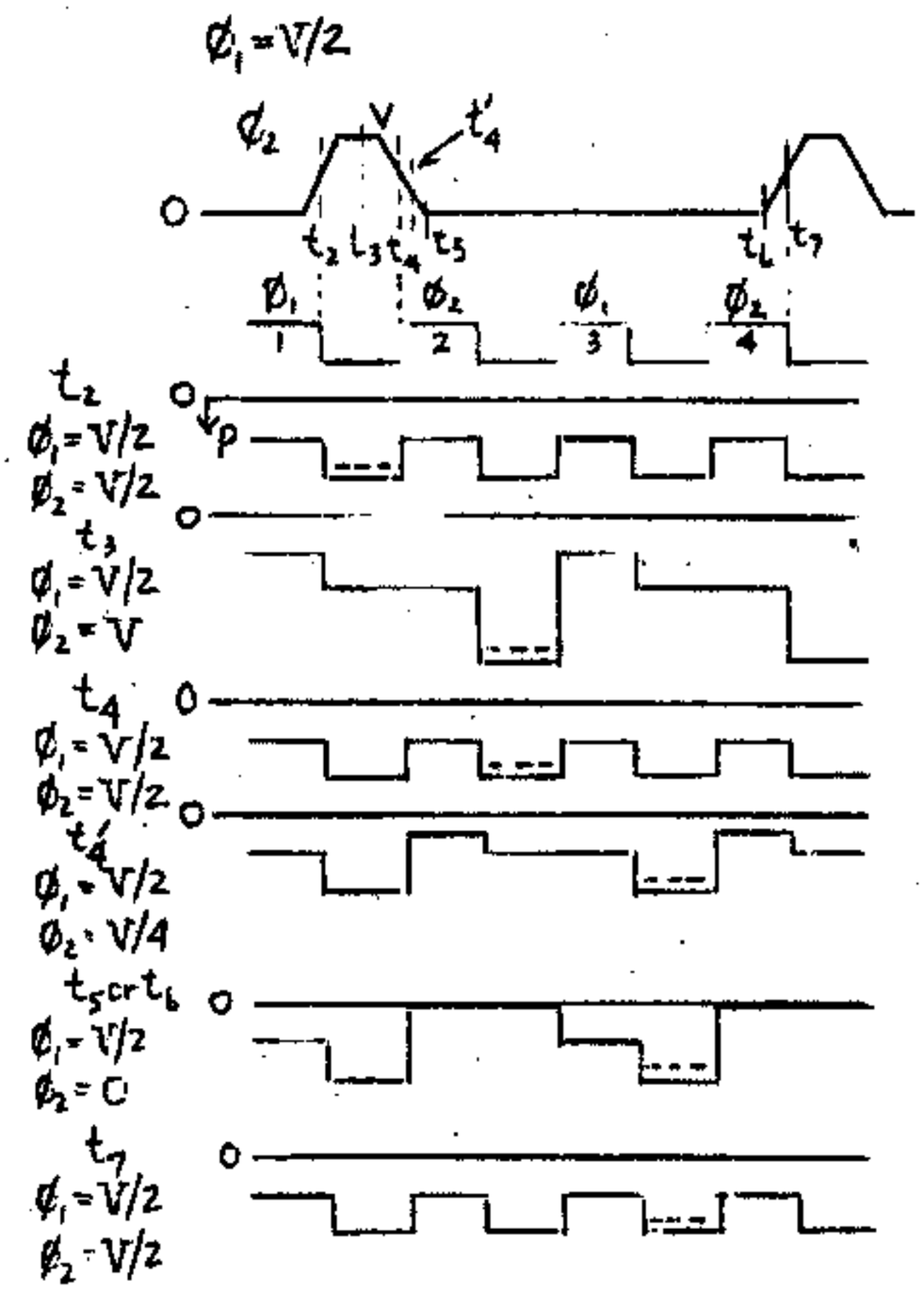

The interval t_7-t_2=T×the clock period and the charge in the well under E_1 now resides in the site under E_3.

9-24 Let $t' = t + \frac{T}{2}$ Thus, $t_1' = t_1 + \frac{T}{2} = t_7$ of Fig. 9-33, etc.

As in Fig. 9-34 if $\phi = 0$ it is not listed in the left column

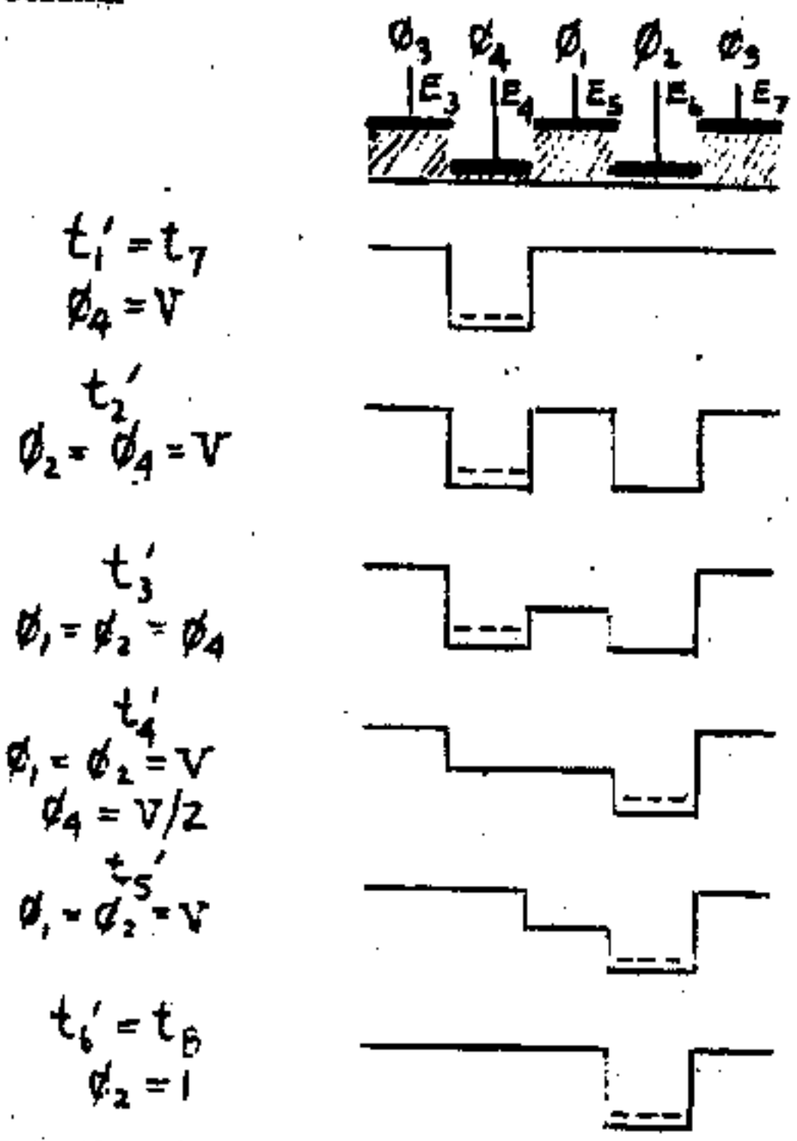

Note that these profiles are identical with those in Fig. 9-34 except shifted to the right by 2 electrodes.

9-25

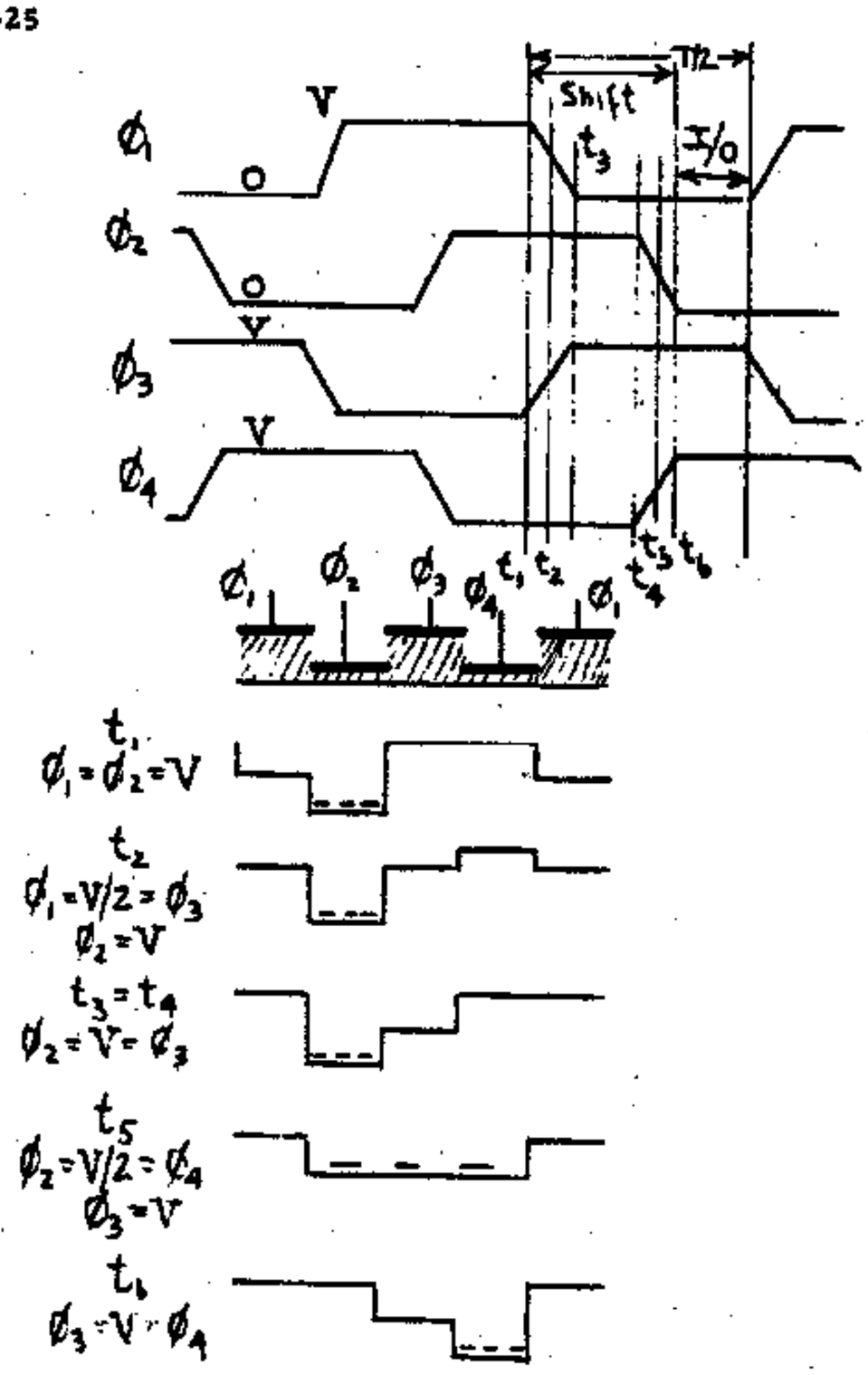

$\phi = 0$ if not listed at the left.

Note that no charge is stored under E_3 except momentarily. Since two shifts and two I/O intervals occur in one period T then the electrodes per bit is 4, because the charge starts at E_3 goes to E_6 in T/2 and shifts to E_3 in the next half cycle.

9-26

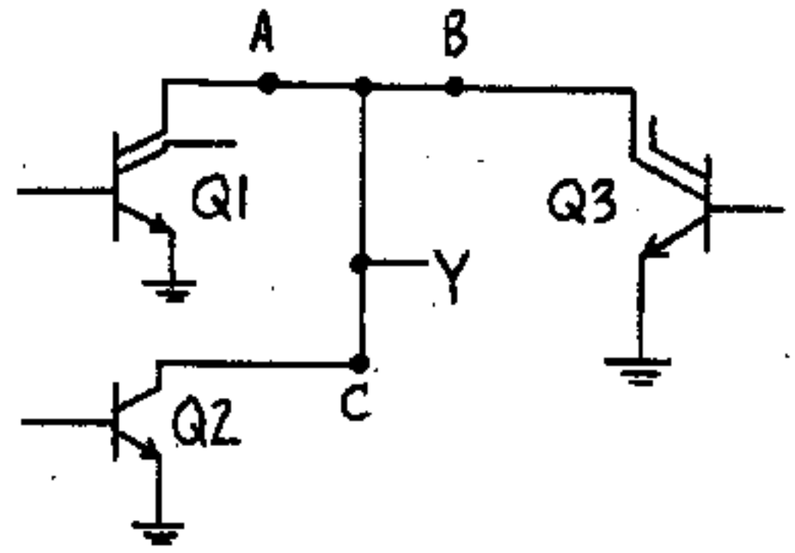

If any one or more of the outputs A, B, and C are 0, that is; if at least one transistor is in saturation; then Y = 0. However, if all transistors are OFF then A, B, and C are high and connecting them together means that Y is high, or Y = I. This reasoning means that Y = ABC.

9-27 Note that $Y = AB + CD = \overline{(\overline{AB})(\overline{CD})}$

The connection diagram follows:

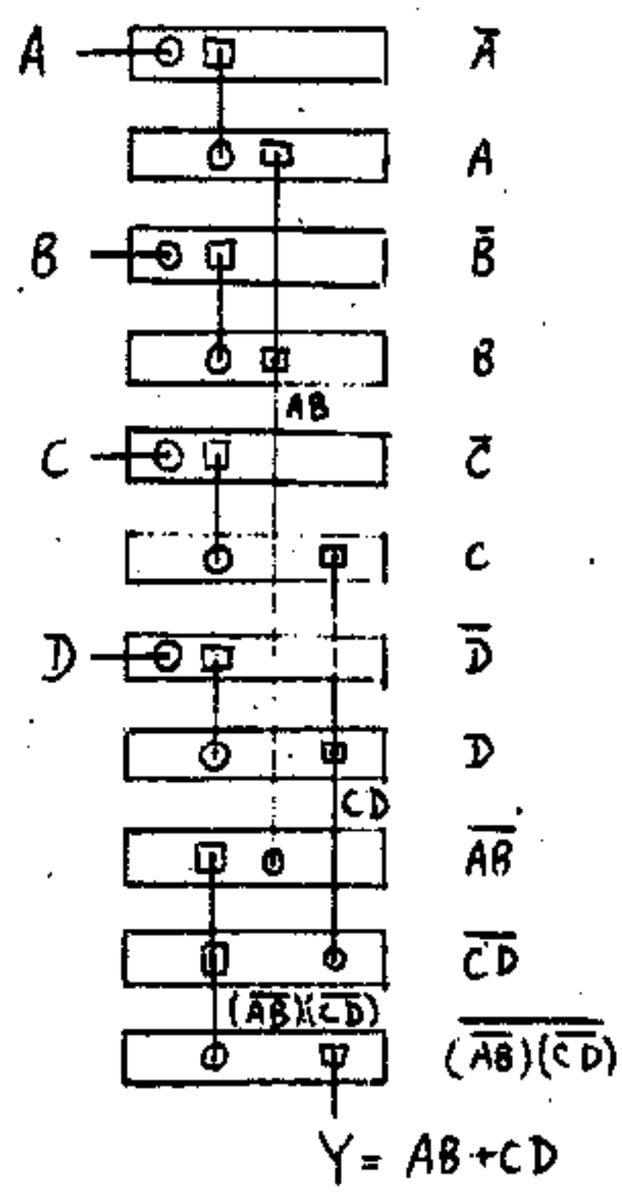

9-28 The decoder outputs are $Y_0 = \overline{\overline{C}\,\overline{B}\,\overline{A}}$

$Y_1 = \overline{\overline{C}\,\overline{B}A}$ $\quad Y_2 = \overline{\overline{C}B\overline{A}}$ $\quad Y_3 = \overline{\overline{C}BA}$

$Y_4 = \overline{C\overline{B}\,\overline{A}}$ $\quad Y_5 = \overline{C\overline{B}A}$ $\quad Y_6 = \overline{CB\overline{A}}$ $\quad Y_7 = \overline{CBA}$

The complements of the Y_s are shown in the diagram. Each goes to a separate inverter, as indicated for Y_7.

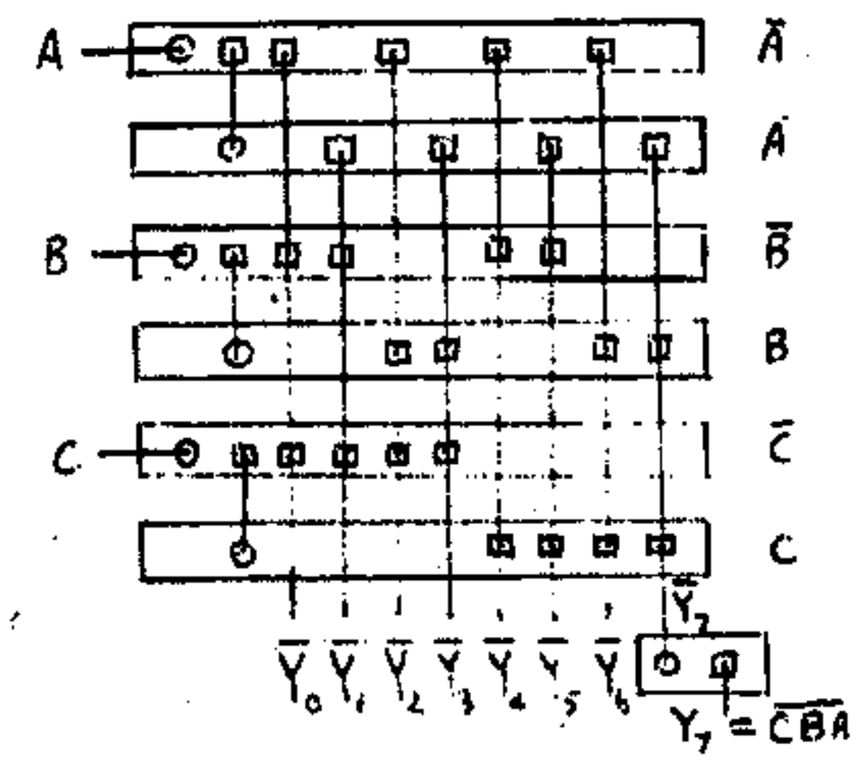

9-29 Since AND-OR is equivalent to NAND-NAND then Fig. 6-20 becomes

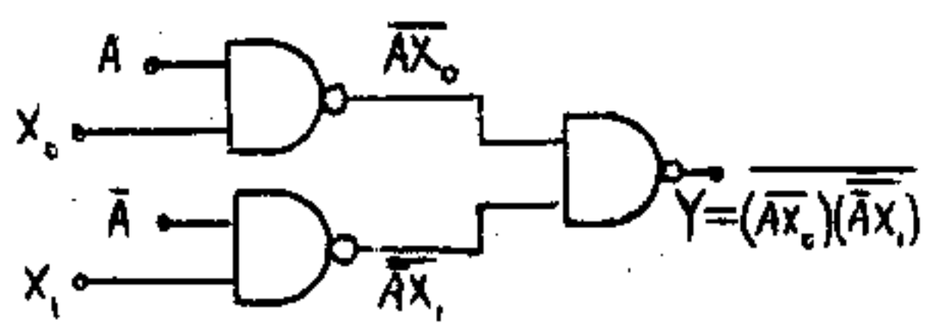

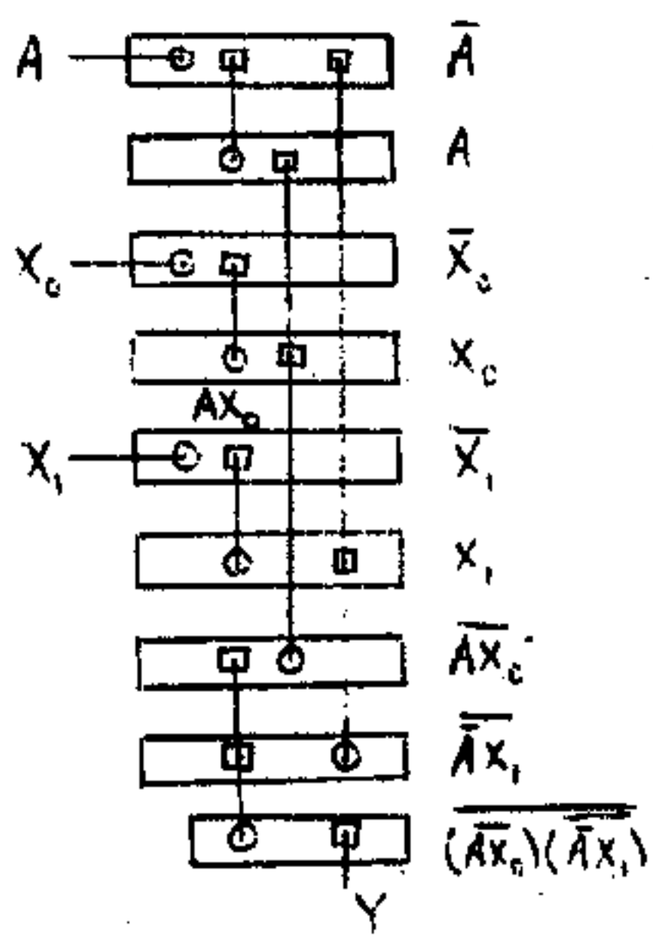

9-30 $C' = AB + BC + CA = \overline{(\overline{AB})(\overline{BC})(\overline{CA})}$

The connection diagram follows.

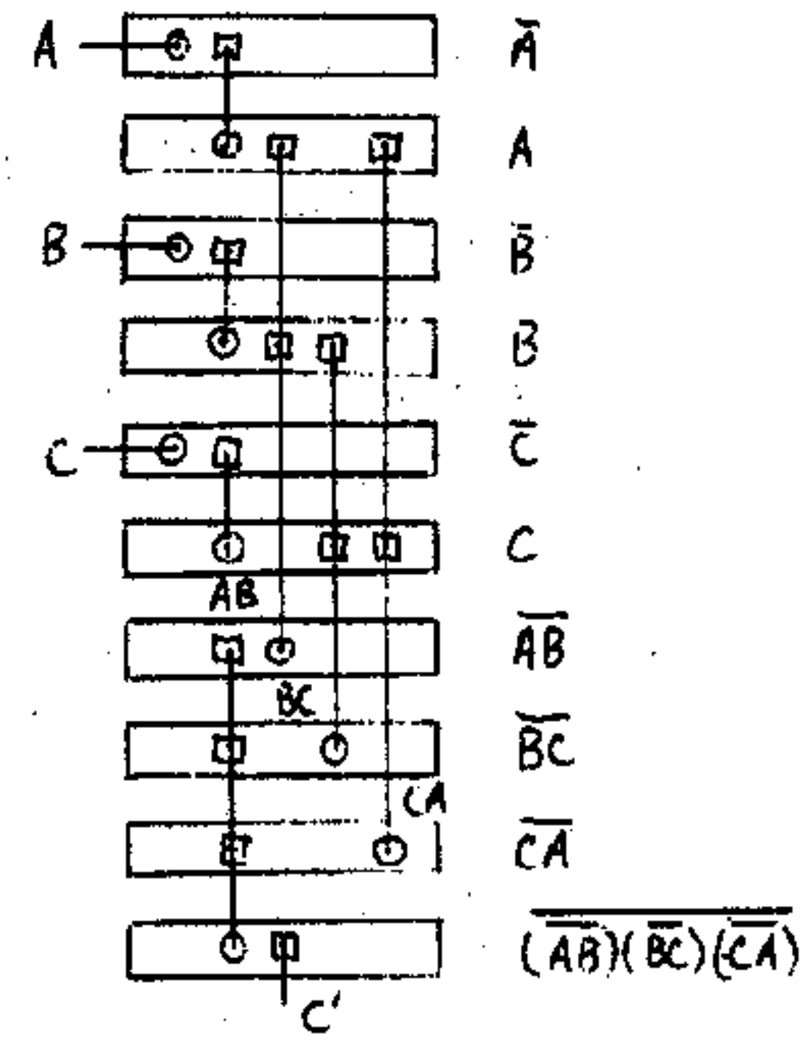

9-31 In the J-K FLIP-FLOP of Fig. 7-7 let B_1 be the input to N_1 and B_2 the input to N_2. Then

$B_1 = \overline{J\,Ck\,\overline{Q}}$ $\quad B_2 = \overline{\overline{K}\,Ck\,Q}$ $\quad Q = B_1\overline{Q}$ and $\overline{Q} = B_2 Q$

The connection diagram which satisfies these equations has three inputs J, Ck, and K and two outputs Q and $\overline{Q}$, as follows:

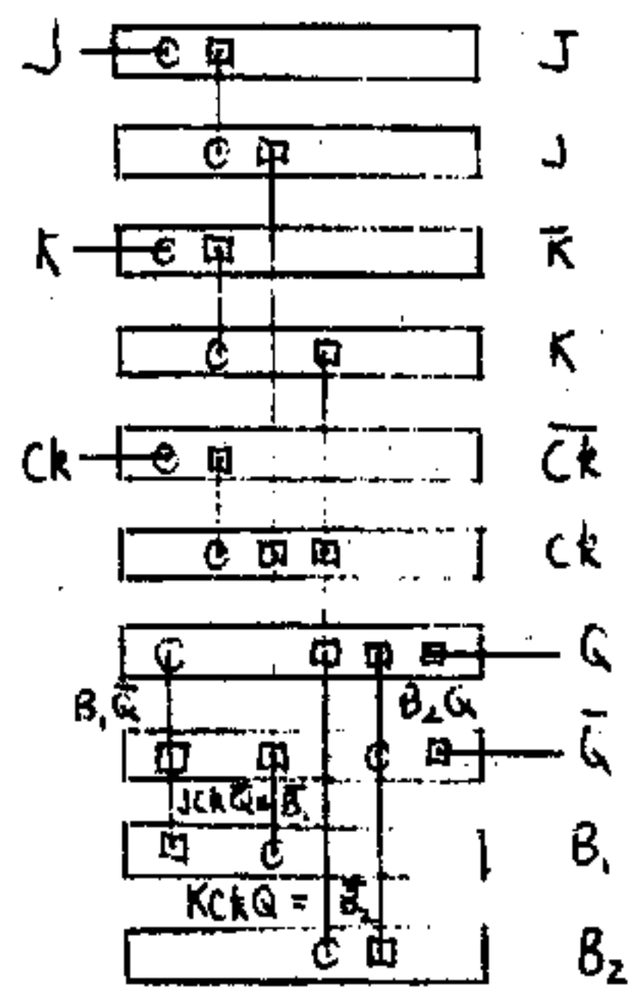

CHAPTER 10

10-1 (a) Using the equivalent circuit of Fig. 10-1a for the diode in the ON state we have for the voltage across the diode:

$$v_D = V_\gamma + i R_f = V_\gamma + \frac{V_m \sin a - V_\gamma}{R_L + R_f} R_f$$

where Eq. (10-1) is used, and

$$V_{D,\max} = V_\gamma + \frac{V_m - V_\gamma}{R_L + R_f} R_f = (0.6 + \frac{3-0.6}{200+20} \times 20) \approx 0.82 \text{ V}$$

Since we assume that the piecewise linear model can be used (with $R_r = \infty$) and, there is no break region, the diode turns ON and OFF abruptly. Therefore, all the voltage is applied to the diode during the time it is OFF, v_D will have the form of the figure where ϕ is calculated from Eq. (10-2):

$$\phi = \arcsin \frac{V_\gamma}{V_m} = \arcsin \frac{0.6}{3.0} = 11.54^\circ$$

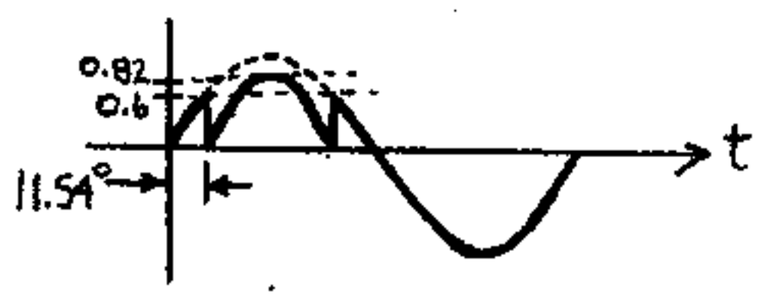

(b) From Fig. 10-1, $\overline{v}_L = \frac{1}{2\pi}\int_0^{2\pi} i R_L \, da$

$$= \frac{1}{2\pi}\left[\int_0^{\phi} i R_L \, da + \int_{\phi}^{\pi-\phi} i R_L \, da + \int_{\pi-\phi}^{2\pi} i R_L \, da\right]$$

$$= \frac{1}{2\pi}\left[0 + \int_{\phi}^{\pi-\phi} \frac{V_m \sin a - V_\gamma}{R_L + R_f} R_L \, da + 0\right]$$

$$= \frac{R_L}{2\pi(R_L+R_f)}\left\{[V_m \cos\phi - V_m \cos(\pi-\phi)] - V_\gamma(\pi - \phi - \phi)\right\}$$

$$= \frac{R_L}{2\pi(R_L+R_f)}[2V_m \cos\phi - V_\gamma(\pi - 2\phi)]$$

when the diode is ON

$$v_D = V_\gamma + i R_f = \frac{1}{R_L+R_f}(R_L V_\gamma + R_f V_m \sin a)$$

when the diode is OFF $v_D = v_i = V_m \sin a$

So

$$\overline{v}_D = \frac{1}{2\pi}\int_0^{\phi} V_m \sin a \, da + \frac{1}{2\pi(R_L+R_f)}\int_{\phi}^{\pi-\phi}(R_L V_\gamma + R_f V_m \sin a) da$$

$$+ \frac{1}{2\pi}\int_{\pi-\phi}^{2\pi} V_m \sin a \, da$$

$$= \frac{V_m}{2\pi}(\cos 0 - \cos\phi) + \frac{R_L V_\gamma}{2\pi(R_L+R_f)}(\pi - 2\phi)$$

$$+ \frac{R_f V_m}{2\pi(R_L+R_f)}(\cos\phi - \cos(\pi-\phi))$$

$$+ \frac{V_m}{2\pi}(\cos(\pi-\phi) - \cos 2\pi) \qquad \text{Since } \cos\phi = -\cos(\pi-\phi),$$

$$\overline{v}_D = -\frac{V_m}{\pi}\cos\phi + \frac{R_L V_\gamma}{2\pi(R_L+R_f)}(\pi - 2\phi) + \frac{R_f V_m}{\pi(R_L+R_f)}\cos\phi$$

$$\overline{v}_D = -\frac{R_L}{2\pi(R_L+R_f)}\left[2V_m \cos\phi - V_\gamma(\pi - 2\phi)\right]$$

Note that $\overline{v}_D = -\overline{v}_L$. This follows from the fact that $v_i = v_D + v_L$, and, since the average value $\overline{v}_i$ of v_i is 0, then $\overline{v}_D = -\overline{v}_L$.

10-2 When $v_i > 5$ V the diode is ON and since $R_f = 0$ $v_o = v_i$.

When $v_i < 5$ V the diode is reverse biased and

$v_o = (v_i - 5)\frac{R}{R+R_r} + 5 = (v_i - 5)\frac{1}{3} + 5 = \frac{-25}{3} + 5$ and

$v_{o,\min} = \underline{-3.33 \text{ V}}$

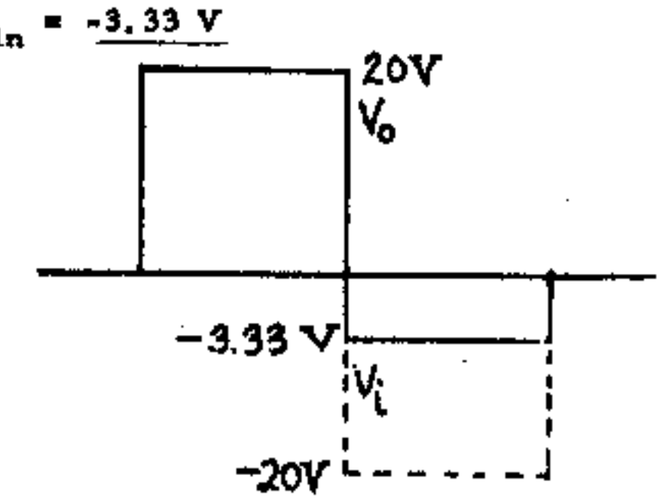

10-3 For the circuit of Fig. 10-5a:

When the diode conducts:

$$v_o = \frac{R_f}{R+R_f}(v_i - V_R) + V_R \qquad (1)$$

and when the diode is OFF $v_o = v_i$

For the diode to remain OFF we must have

$$v_i \geq V_R \quad \text{or} \quad 20 \sin \omega t \geq 10 \quad \text{or} \quad \frac{\pi}{6} \leq \omega t \leq \frac{5\pi}{6}$$

From (1) we have $v_o = \frac{10}{R+10}(v_i - 10) + 10$ and for the minimum value of v_o setting $v_i = v_{i,\min} = -20$ V

$$v_{o,\min} = \frac{10}{R+10}(-20 - 10) + 10$$

$$\text{or} \quad v_{o,\min} = 10\left(\frac{R-20}{R+10}\right)$$

Also $v_{o,\max} = v_{i,\max} = 20$ V

So: (a) For $R = 50\,\Omega$ $v_{o,\min} = \underline{5 \text{ V}}$, $v_{o,\max} = \underline{20 \text{ V}}$

(b) For $R = 500\,\Omega$ $v_{o,\min} = \underline{9.41 \text{ V}}$, $v_{o,\max} = \underline{20 \text{ V}}$

(c) For $R = 2\text{ k}\Omega$ $v_{o,\min} = \underline{9.85 \text{ V}}$, $v_{o,\max} = \underline{20 \text{ V}}$

Note that as R becomes large compared with R_f we approach the value $v_{o,\min} = 10 \text{ V} = V_R$ and the output waveform of Fig. 10-5c which is drawn for $R_f = 0$

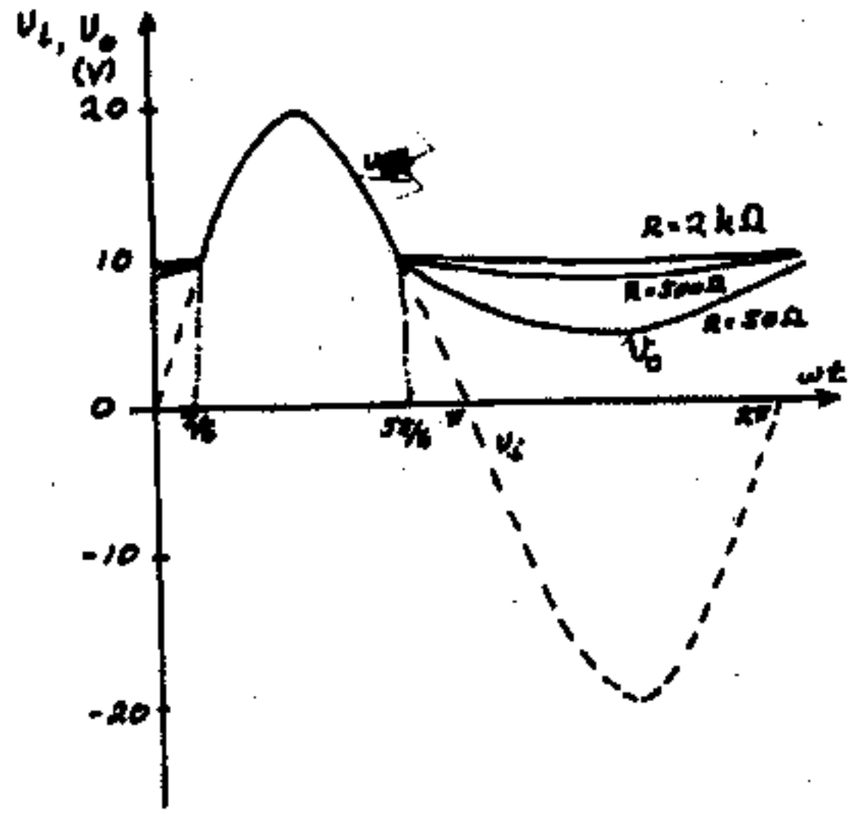

10-4 For the period of time that the diode is ON the solution is the same as in Prob. 10-3. However, when the diode is OFF v_o is no longer v_i but

$$v_o=(v_i-10)\frac{R_r}{R+R_r}+10=(v_i-10)\frac{20}{R+20}+10$$

and $v_{o,max}$ is obtained by setting $v_i=v_{i,max}=20$ V in the above equation. Then we have

$$v_{o,max}=10\left(\frac{R+40}{R+20}\right) \quad \text{and}$$

(a) For $R=50\,\Omega$ $\quad v_{o,max}=\underline{19.98\text{ V}}$

(b) For $R=500\,\Omega$ $\quad v_{o,max}=\underline{19.76\text{ V}}$

(c) For $R=2\text{ k}\Omega$ $\quad v_{o,max}=\underline{19.09\text{ V}}$

Note that since R is small compared with R_r we approach the solution of Problem 10-3 of $v_{o,max}=20$ V which was obtained for $R_r=\infty$

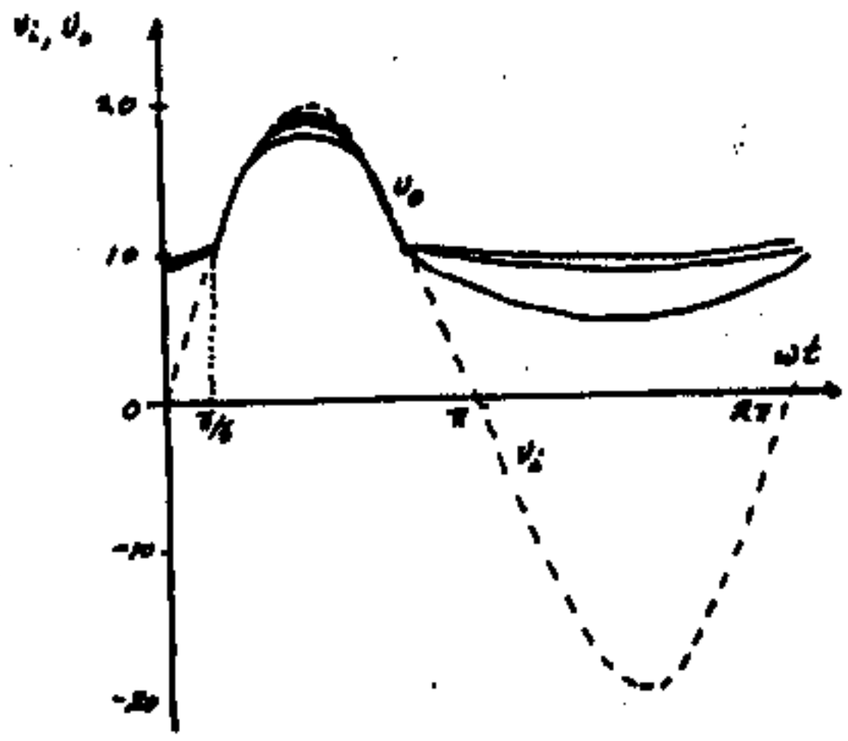

10-5

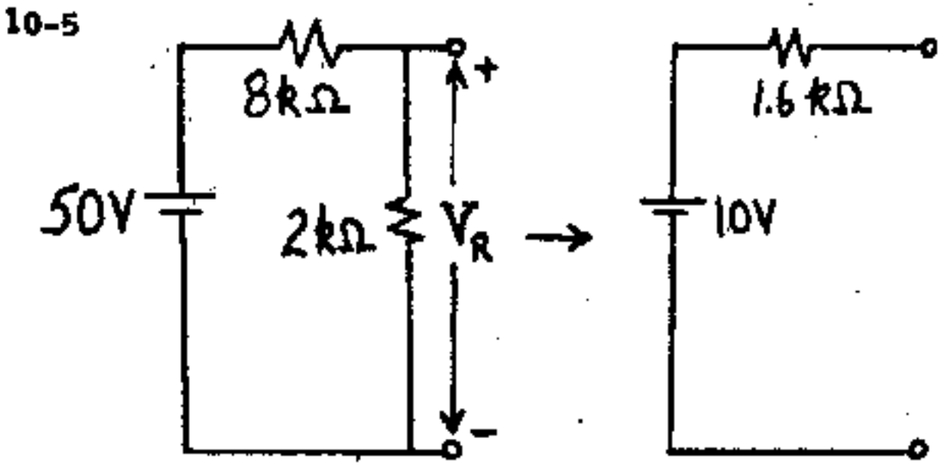

Replacing V_R by the above equivalent we get from Fig. 10-5a and 10-5b:

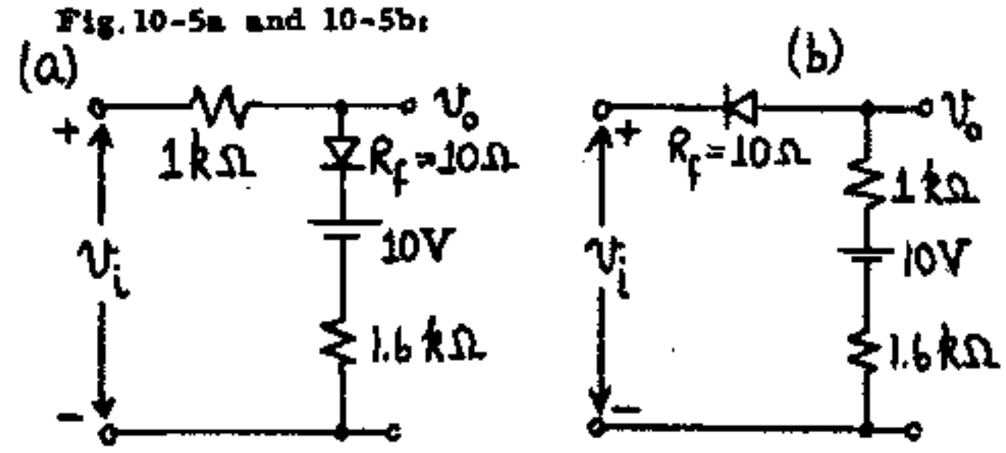

For the circuit of 10-5a we have:

for $v_i < 10$ V the diode is OFF and $v_o=v_i$

for $v_i \geq 10$ V $\quad v_o=(v_i-10)\dfrac{R_f+1.6}{R_f+1.6+1}$

$$+10=(v_i-10)\frac{1.61}{2.61}+10 \quad \text{and} \quad v_{o,max}=16.17\text{ V}$$

For the circuit of 10-5b we have:

for $v_i > 10$ V the diode is OFF and $v_o=10$ V

for $v_i \leq 10$ V $\quad v_o=(v_i-10)\dfrac{1+1.6}{1+1.6+R_f}+10$

$$=(v_i-10)\frac{2.6}{2.61}+10$$

and $\quad v_{i,min}=-30\dfrac{2.6}{2.61}+10=-19.89$ V

From the waveforms, which are shown below, we conclude that the circuit of Fig. 10-5b is better for this application.

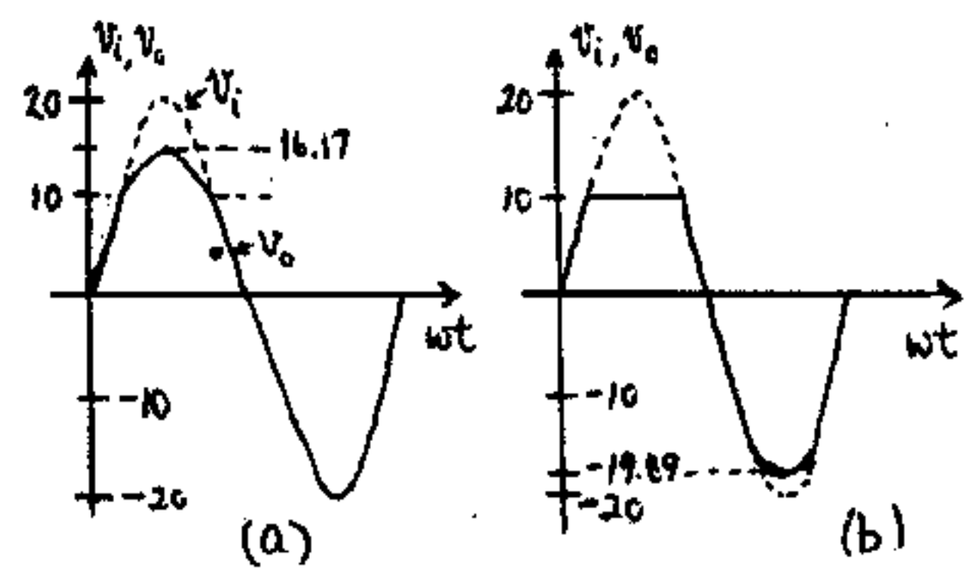

10-6 (a) For the circuit of Fig. 10-5b we have:

For $v_i > V_R - V_\gamma$ the diode is OFF and since $R_r=\infty$ $\quad v_o=V_R$.

For $v_i < V_R - V_\gamma$ the diode is ON and since $R_r \neq 0$

$$v_o=(v_i+V_\gamma-V_R)\frac{R}{R+R_f}+V_R$$

Observe that v_o increases linearly with v_i with a slope of $R/(R+R_f)$.

(b) For the circuit of Fig. 10-5d

For $v_i < V_R + V_\gamma$ the diode is OFF and $v_o = V_R$

For $v_i > V_R + V_\gamma$ the diode is ON and

$$v_o=(v_i-V_\gamma-V_R)\frac{R}{R+R_f}+V_R$$

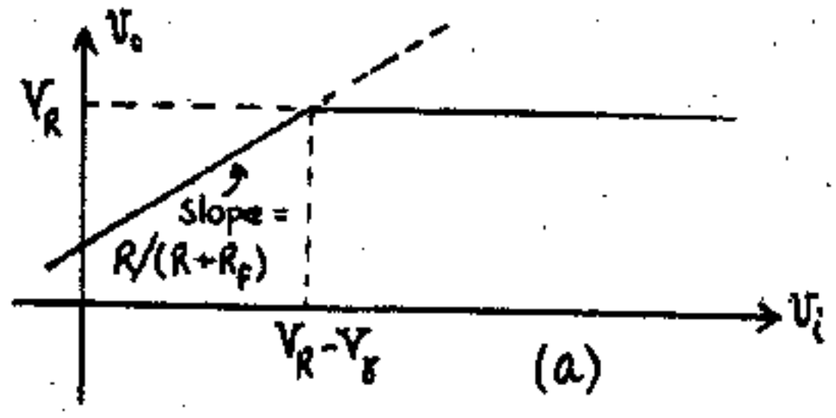

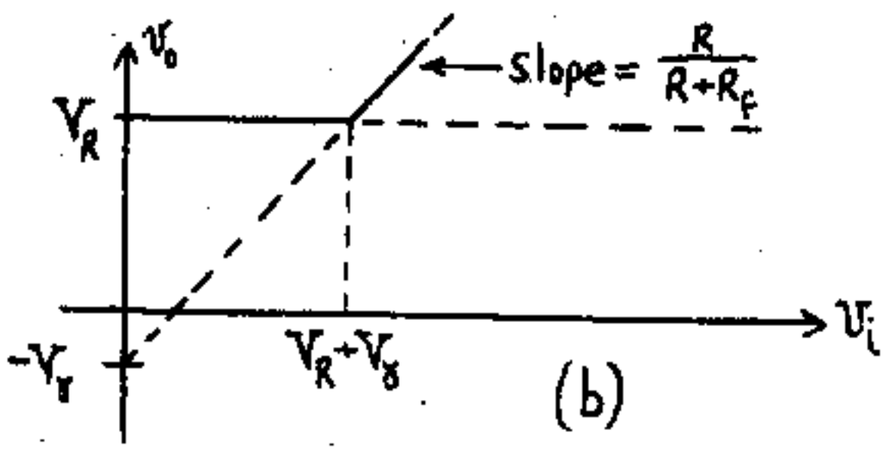

10-7 (a) For $-25 < v_i < V_R = -20$ V, the diode is ON and $v_o = V_R = -20$ V.

for $v_i > V_R = -20$ V, D is OFF and $v_o = v_i$

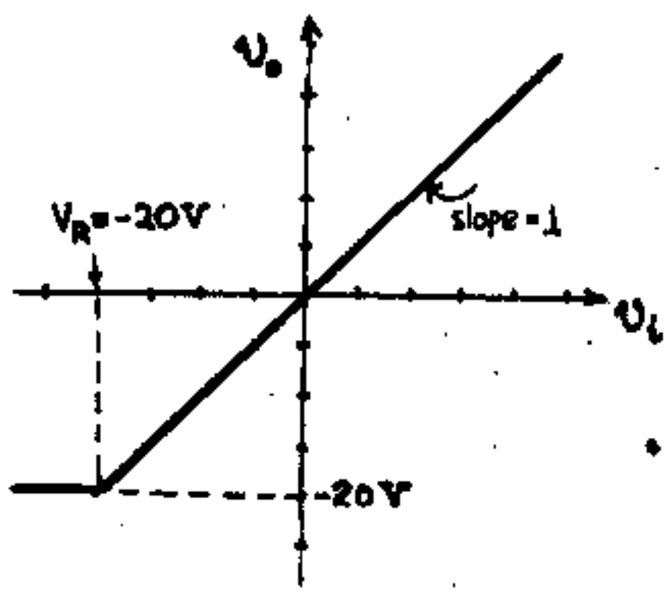

(b) For $v_i = -25$ V, D is ON and

$$v_o = (V_R-V_\gamma)-\frac{R_f}{R_f+R}(-v_i+V_R-V_\gamma)$$

$$=(-20-0.6)-\frac{0.01}{2.01}(25-20-0.6)=\underline{-20.62\ V}$$

10-8 (a) If $v_i > V_R = 0$ V, D is ON and $v_o = v_i$

If $v_i < V_R = 0$ V, D is OFF and $v_o = V_R = 0$ V

Hence we have the following waveforms:

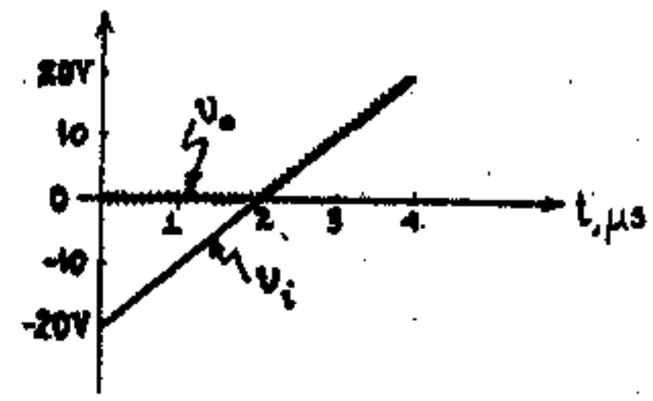

(b) For $V_R=0$, $v_i = v_D + v_r$ where v_D and v_r are the voltages across the diode and the resistor, respectively. From Eq. (2-3) $v_D = \eta V_T \ln\frac{I+I_o}{I_o}$.

Let us calculate v_i at the instant t_1 when $v_o = 0.1$ V for the two values of R. Since $I = v_o/R$, we have:

For R = 10 kΩ I = 0.1/10 = 0.01 mA. Since $I_o = 10^{-6}$ mA

$$v_D = 2\times .026\times \ln\frac{10^{-2}+10^{-6}}{10^{-6}} = 0.48\ V \quad \text{and} \quad v_i = 0.58\ V$$

For R = 100 kΩ we have respectively:

$I = 10^{-3}$ mA, $v_D = 0.36$ V and $v_i = 0.46$ V.

Now $\Delta t_1 = \frac{\Delta V_i}{10\ V/\mu s} = \frac{0.58-0.46}{10\ V/\mu s} = 12$ ns.

10-9 (a) For $v_i \le V_R$ D1 is OFF and $v_o = V_R - V_\gamma$

For $v_i > V_R$, $v_o = v_i - V_\gamma$

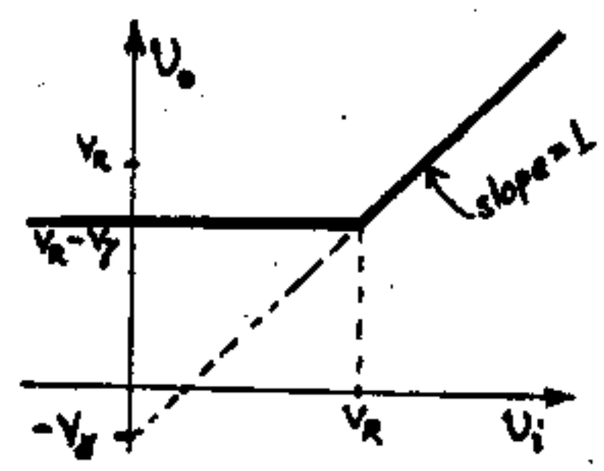

(b) The current through D2 becomes negative when the voltage at the cathode of D2 $v_c \ge V_R$. When $v_c = V_R$ $I_{D2} = 0$ and the same current that flows through D1 flows through R and R'. Or

$$I = \frac{v_{i,max} - V_\gamma}{R + R'} \quad \text{and} \quad I = \frac{V_R - V_\gamma}{R'} \quad \text{so}$$

$$v_{i,max} = \frac{R+R'}{R'}(V_R-V_\gamma)+V_\gamma$$

$$\text{or} \quad v_{i,max} = V_R + \frac{R}{R'}(V_R - V_\gamma)$$

(c) The breakpoint of the transfer curve occurs at $v_i = V_R$ and is independent of temperature

10-10 (a)

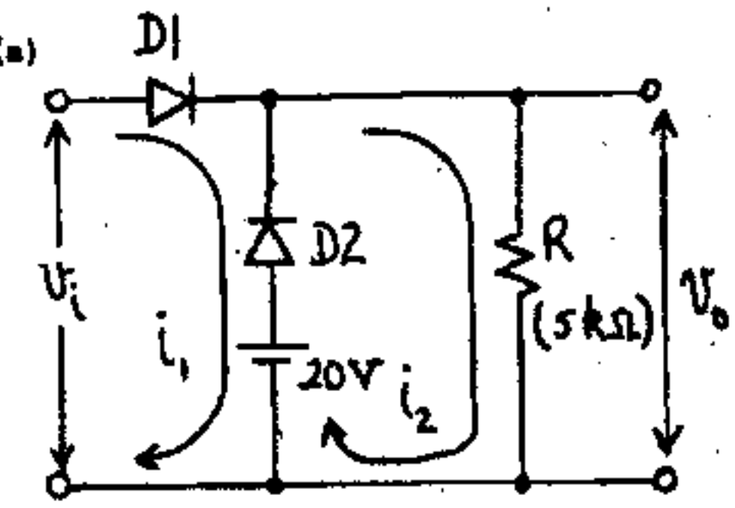

Assume both diodes are ON. Then D1 and D2 are replaced by $R_f = 20\ \Omega$.

$v_i = 2i_1 R_f - i_2 R_f + 20$ V (1)

and

$i_2(R + R_f) - i_1 R_f = 20$ V (2)

Solving (1) and (2) for i_1 and i_2 we get:

$i_2 = \dfrac{v_i + 20}{2R + R_f}$, $i_1 = \dfrac{(R+R_f)\,v_i - 20R}{(2R + R_f)R_f}$ so that we have

$$I_{D2} = i_2 - i_1 = \frac{(R+R_f)20 - v_i R}{(2R + R_f)R_f}.$$

So for D2 to be ON we must have $I_{D2} \geq 0$ or

$v_i \leq (1 + \dfrac{R_f}{R})\,20 = 20.08$ V (3)

For D1 to be ON $I_{D1} = i_1$ should be positive or

$v_i \geq (\dfrac{R}{R+R_f})\,20 = 19.92$ (4)

So we have

	D1	D2	
$v_i \leq 19.92$ V	OFF	ON	$v_o = \dfrac{R}{R+R_f}\,20$ V $= 19.92$ V
$19.92\text{ V} \leq v_i \leq 20.08$ V	ON	ON	$v_o = i_2 R = \dfrac{R}{2R+R_f}(v_i + 20)$ $= 0.499\,(v_i + 20)$
$20.08\text{ V} \leq v_i$	ON	OFF	$v_o = \dfrac{R}{R+R_f}\,v_i = 0.996\,v_i$

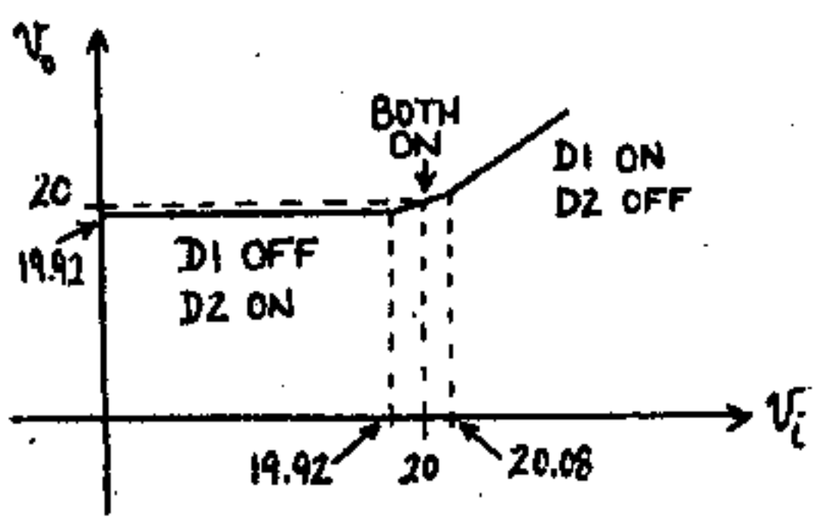

(b) With D2 replaced by R(5 kΩ) D1 conducts as long as $v_i \geq v_o$. Then $v_o = (v_i - 20)\dfrac{R}{R+R_f} + 20$

$$= \frac{v_i R + 20 R_f}{R + R_f} = 0.996\,v_i + 0.08$$

For $v_i < v_R$ D1 is OFF and $v_o = 20$ V

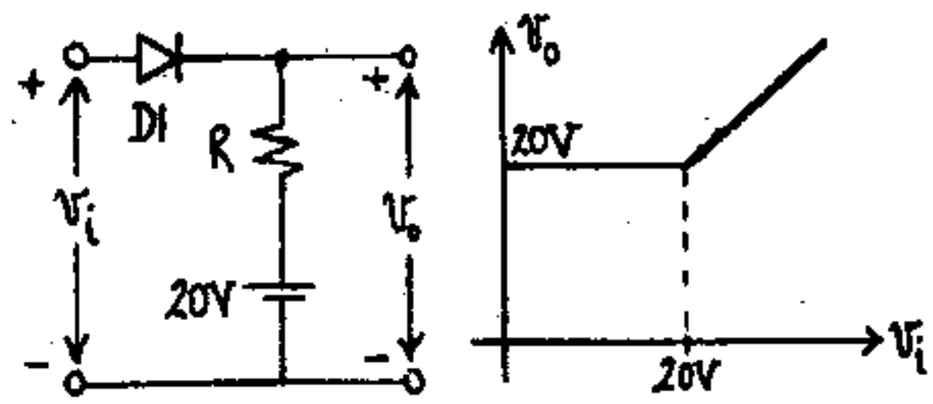

(c) From part (a) inequalities (3) and (4) with $R_f = 0$ now read $v_i \leq 20$ V and $v_i \geq 20$ V respectively. So the two break points coincide and the transfer characteristic is that of part (b)

10-11 (a) See the figure below.

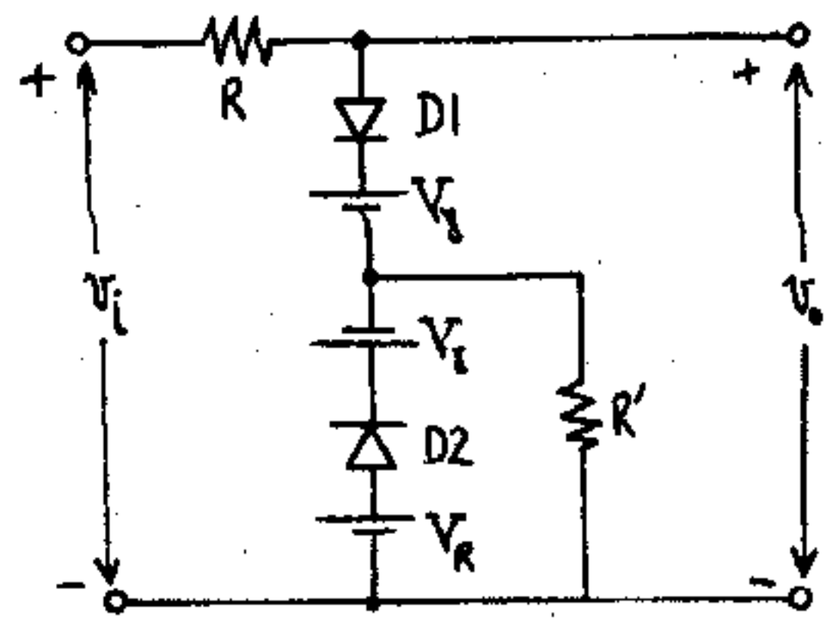

(b) $v_o = v_i$ as long as D1 is OFF or as long as $v_i \leq V_\gamma - V_\gamma + V_R = V_R$. For $v_i > V_R$ D1 is ON and $v_o \approx V_R$ (Since $R_r \gg R \gg R_f$).

(c) When $v_i = v_{i,max}$ $I_{D2} = 0$ and we have

$v_{i,max} = I_{D1} R + V_\gamma + I_{D1} R'$ and $I_{D1} R' = V_R - V_\gamma$

Hence $v_{i,max} = (R+R')\dfrac{V_R - V_\gamma}{R'} + V_\gamma = V_R + \dfrac{R}{R'}(V_R - V_\gamma)$

10-12

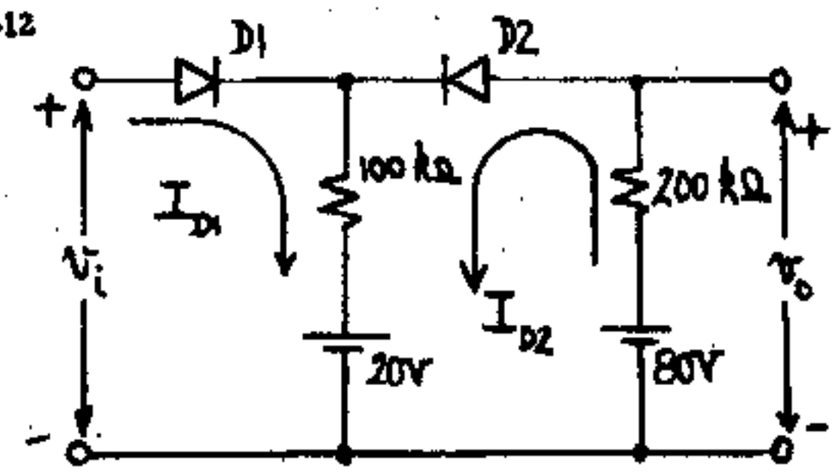

From the figure for D1 and D2 ON we have:

$v_i = (I_{D1} + I_{D2})100 + 20$ V (1) and

$80\text{ V} = I_{D2} \cdot 200 + (I_{D1} + I_{D2})100 + 20$ (2)

From (1) and (2) $I_{D1} = \dfrac{3v_i - 120\text{ V}}{200}$

and $I_{D2} = \dfrac{80\text{ V} - v_i}{200}$

So D1 is ON when $I_{D1} \geq 0$ or $v_i \geq 40$ V and D2 is ON when $v_i \leq 80$ V. So

	D1	D2	
$v_i \leq 40$ V	OFF	ON	$v_o = 100\frac{60}{300} + 20 = 40$ V
$40\text{ V} \leq v_i \leq 80$ V	ON	ON	$v_o = v_i$
$80\text{ V} \leq v_i$	ON	OFF	$v_o = 80$ V

The transfer characteristic along with the input and output waveform as functions of time are shown below.

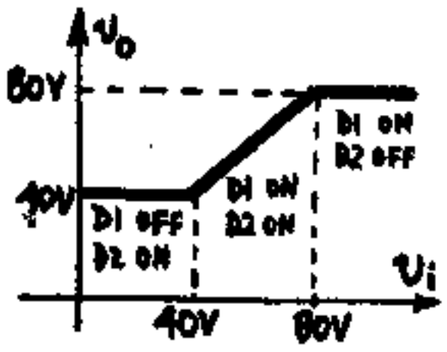

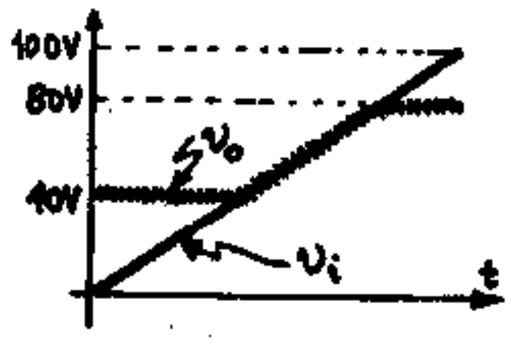

10-13 When $v_i < 25$ V both diodes are OFF. So $v_o = 25$ V. For $v_i \geq 25$ V D1 conducts and as long as D2 is OFF $v_o = 25\text{ V} + (v_i - 25)\frac{200}{300}$.

D2 turns ON when v_o reaches 100 V, or from above $v_i = 137.5$ V. So at $v_i \geq 137.5$ V both diodes are ON and $v_o = 100$ V

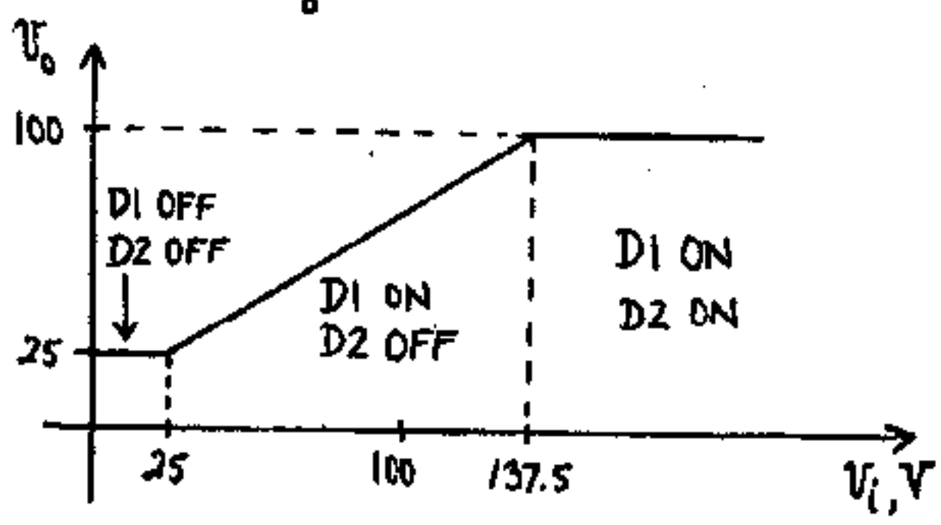

10-14 (a) From the discussion of Sec. 10-3 we see that the output waveform is not flat for both diodes OFF or for $V_{R1} < v_i < V_{R2}$ (1), assuming $V_\gamma = 0$ we want (1) to hold for 5% of the time or equivalently for 18° for every full cycle. That is we require that

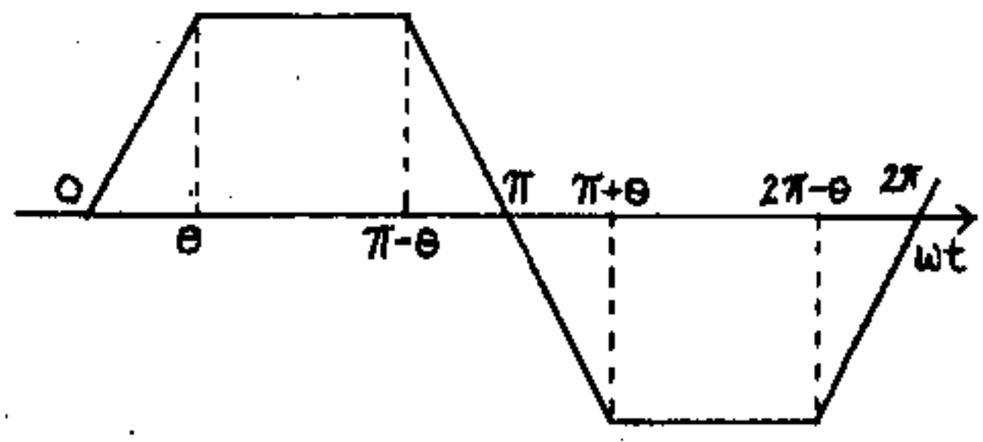

$\theta + [(\pi+\theta) - (\pi-\theta)] + [2\pi - (2\pi - (2\pi - \theta)] = 18°$

or $4\theta = 18°$ or $\theta = 4.5°$

At $\omega t = \theta$ (or $\pi - \theta$) we have $v_i = V_{R2}$ or

$V_p \sin\theta = V_{R2}$ or $60 \sin 4.5° = V_{R2}$ So

$V_{R2} = 4.7$ V. At $\omega t = \pi + \theta$ (or $2\pi - \theta$) $v_i = V_{R1}$

$60 \sin 184.5° = V_{R1}$ or $V_{R1} = -4.7$ V

So (a) $V_{R1} = -4.7$ V and $V_{R2} = 4.7$ V

(b) When both diodes are OFF their equivalent resistance is $500\text{ k}\Omega \parallel 500\text{ k}\Omega = 250\text{ k}\Omega$.

When one of the diodes is ON, the equivalent resistance is $100\ \Omega \parallel 500\text{ k}\Omega \approx 100\ \Omega$.

A reasonable value for R that would satisfy $R_f \ll R \ll R_r$ would be their geometric average

or $R = \sqrt{250 \times 0.1} = 5\text{ k}\Omega$

10-15 (a) For $-5 \leq v_i \leq 0$ D1 conducts. Then $v_o = v_i/2$ because of the voltage divider.

D2 conducts for $0 \leq v_i \leq 5$ and again $v_o = v_i/2$

So $v_o = v_i/2$ for all v_i

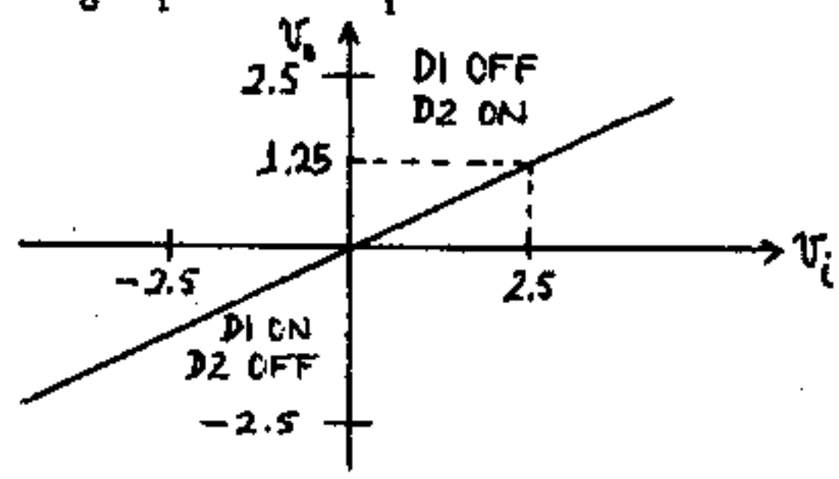

(b) Now D1 conducts for $-5 \leq v_i \leq -1$ V and then

$v_o = -1 + \frac{1}{2}(v_i + 1) = \frac{1}{2}(v_i - 1)$

D2 conducts for $v_i \geq +1$ V and then

$v_o = +1 + \frac{1}{2}(v_i - 1) = \frac{1}{2}(v_i + 1)$

For $-1 \leq v_i \leq 1$ both diodes are OFF and $v_o = v_i$

So

$$v_o = \begin{cases} \frac{1}{2}(v_i - 1) & -5\text{ V} \le v_i \le -1\text{ V} \\ v_i & -1\text{ V} \le v_i \le +1\text{ V} \\ \frac{1}{2}(v_i + 1) & +1\text{ V} \le v_i \le 5\text{ V} \end{cases}$$

The transfer characteristic is plotted below.

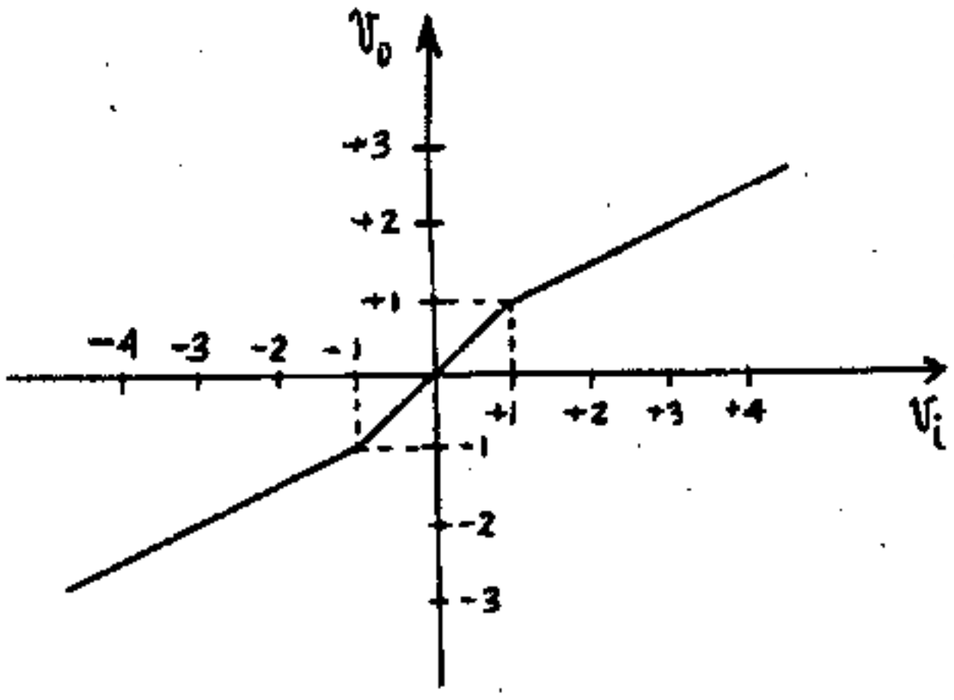

10-16 (a) As long as $v_i < v_o$ D1 is OFF and D2 is ON clamping v_o to 10 V.

At $v_i = 10$ V, $v_i = v_o$ and D1 turns ON shorting the output to the input.

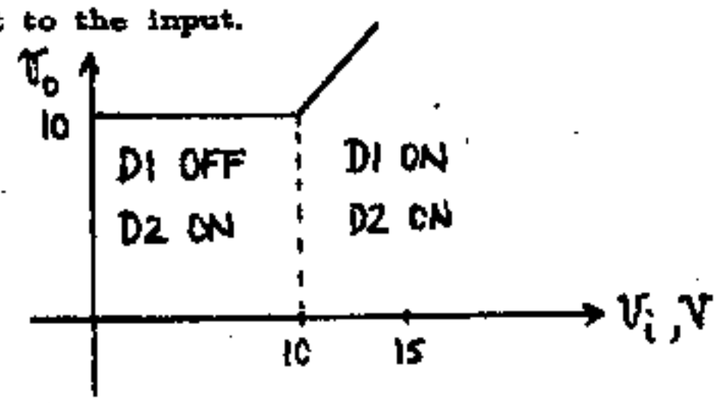

(b) For D2 to turn OFF we should have $v_i = 20$ V (so that the voltage at the cathode of D2 would reach 10 volts). Therefore for $0 \le v_i \le 15$ V D2 is never OFF. The current I_1 through R_1 is zero as long as D1 is OFF. When D1 is ON we have $I_1R_1 = v_o - 10 = v_i - 10$ or $I_1 = (v_i - 10)$mA.

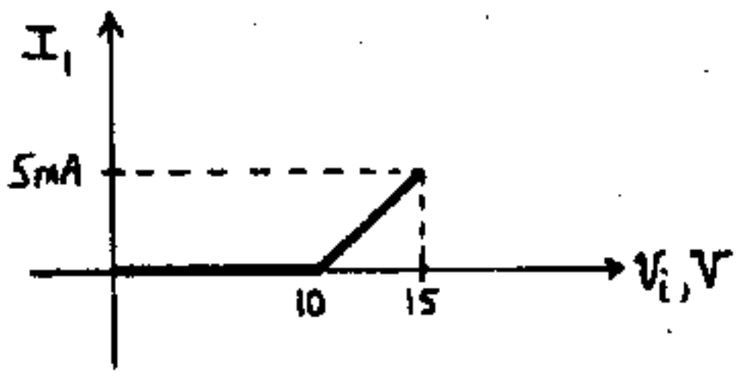

(c) Now for $V_\gamma = 0.7$ V D1 will remain OFF as long as $v_i < v_o + V_\gamma$ and then $v_o = 10\text{ V} - V_\gamma$ D1 will turn ON at $v_i = v_o + V_\gamma = 10\text{ V} - V_\gamma + V_\gamma = 10$ V and thereafter $v_o = v_i - V_\gamma$

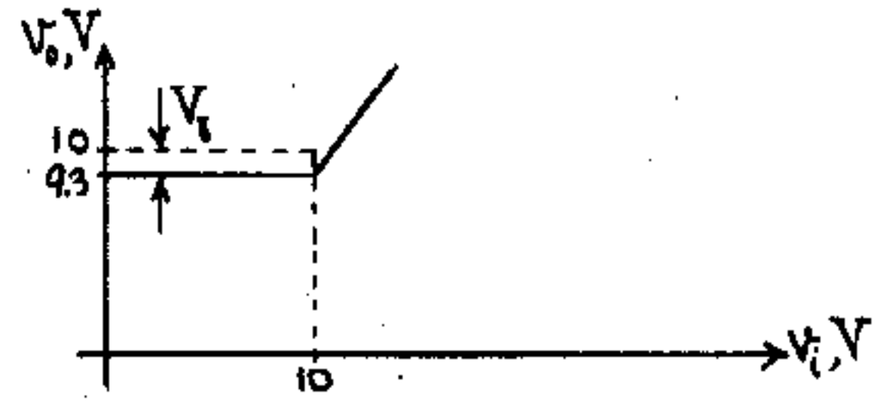

10-17 D2 remains OFF as long as $v_o < 6$ V D1 turns ON at $v_i = 0$, then until $v_o = 6$ V $v_o = \frac{10}{15} v_i$. At $v_o = 6$ V, or $v_i = 9$ V D2 turns ON and v_o is clamped to 6 V.

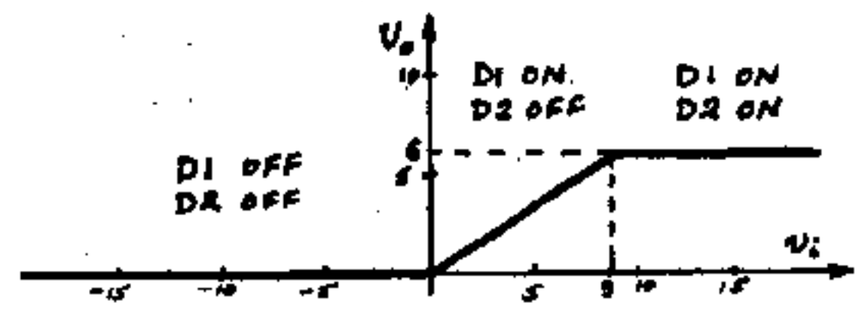

10-18 (a) For $v_i = 0$ both D1 and D2 are OFF. $v_o = 6$ V, hence D1 turns ON when $v_i = 6$ V

(b) For D1 ON and D2 OFF $v_o = (v_i - 6)\frac{5}{10} + 6 = \frac{1}{2}v_i + 3$

D2 turns ON when $v_o = 20$ V or $v_i = 2(20-3)\text{V} = 34$ V

(c) For $v_i = 50$ V both diodes are ON and from the circuit v_o is obtained using superposition. Thus

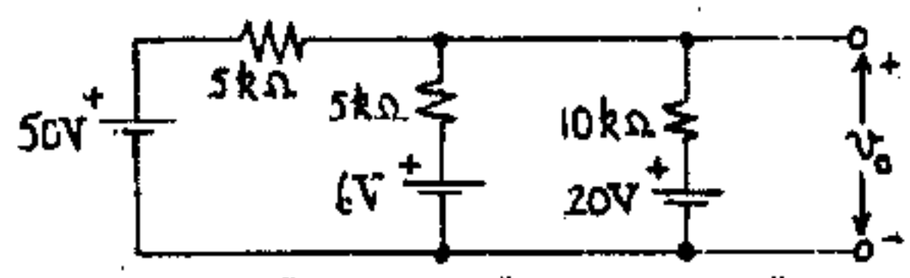

$$v_o = 50 \times \frac{5\|10}{5+5\|10} + 6 \times \frac{5\|10}{5+5\|10} + 20 \times \frac{5\|5}{10+5\|5} = 26.4\text{ V}$$

So the transfer characteristic is as follows:

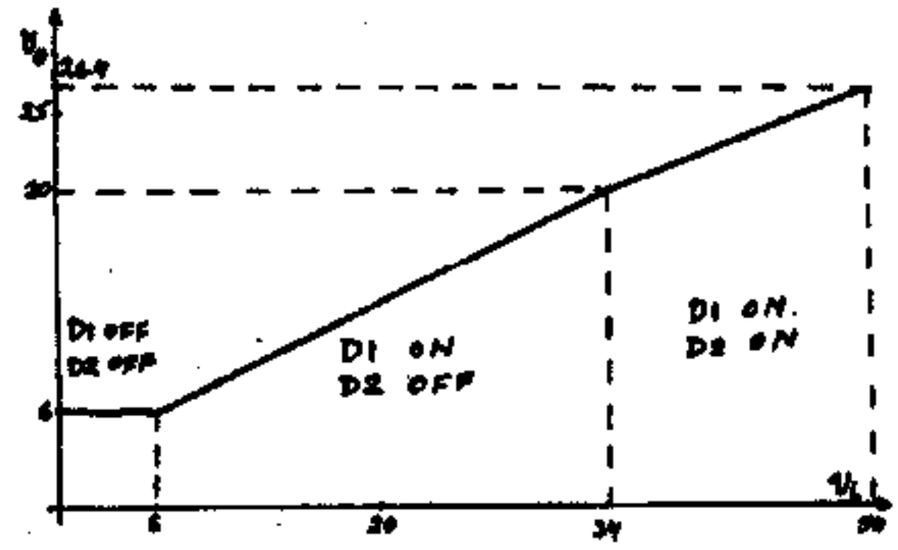

10-19 D1 conducts when $v_o < 6$

D2 conducts when $v_o > 20$

D3 conducts when $v_i > v_o$

Initially ($v_i = 0$) D3 is OFF D2 is OFF, and D1 is ON so $v_o = 6\text{ V} \times \frac{5}{5+5} = 3$ V. So D3 will remain

OFF until $v_i = 3$ V. Then D1 and D3 will be ON and using superposition $v_o = v_i \times \frac{5\|5}{2.5+5\|5}$

$+ 6 \times \frac{5\|2.5}{5+5\|2.5} = (\frac{1}{2} v_i + 1.5)$ V until $v_o = 6$ V or

$v_i = 9$ V. Then D1 turns OFF. Since D2 is still OFF, $v_o = v_i \times \frac{5}{5+2.5} = \frac{2}{3} v_i$ until $v_o = 20$ V or

$v_i = 30$ V. Then D2 turns ON and

$$v_o = v_i \times \frac{10\|5}{2.5+10\|5} + 20 \frac{2.5\|5}{10+2.5\|5} = (\frac{4}{7} v_i + \frac{20}{7})\text{ V}$$

In summary:

	Region	D1	D2	D3		Slope
$0 \le v_i \le 3$ V	1	ON	OFF	OFF	$v_o = 3$ V	0
$3\text{V} \le v_i \le 9\text{V}$	2	ON	OFF	ON	$v_o = (\frac{1}{2} v_i + 1.5)$ V	0.5
$9\text{V} \le v_i \le 30$ V	3	OFF	OFF	ON	$v_o = \frac{2}{3} v_i$	2/3
$30\text{V} \le v_i \le 50$ V	4	OFF	ON	ON	$v_o = (\frac{4}{7} v_i + \frac{20}{7})$ V	4/7

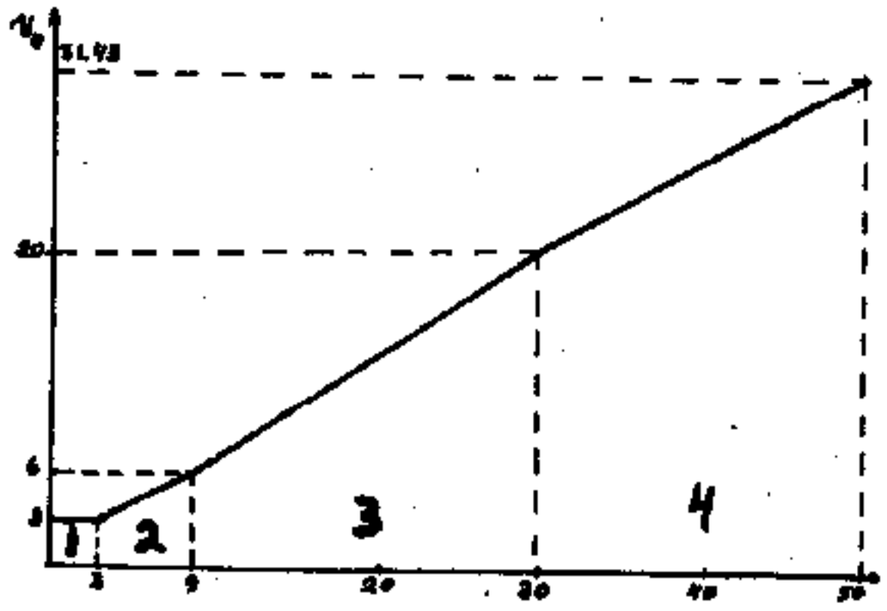

10-20 (a) For $V < V_1$, both diodes are OFF and $I = 0$. For $V > V_1$ D1 is ON and D2 OFF and $I = \frac{V - V_1}{R}$. The slope is $\frac{1}{R}$.

(b) Add a resistor in series with either V_1 or V_2.

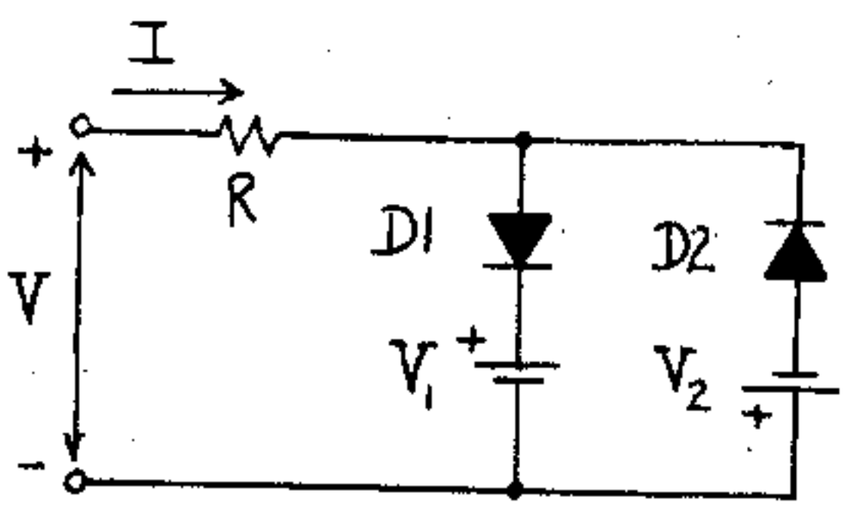

10-21 For $v_i < -10$ V D1 is OFF and D2 is ON so $v_o = 10$ V. For $-10\text{ V} \le v_i < 2.5$ V both D1 and D2 are OFF and $v_o = v_i$.
For $-2.5\text{ V} \le v_i$ D2 is OFF and D1 is ON so $v_o = -2.5$ V

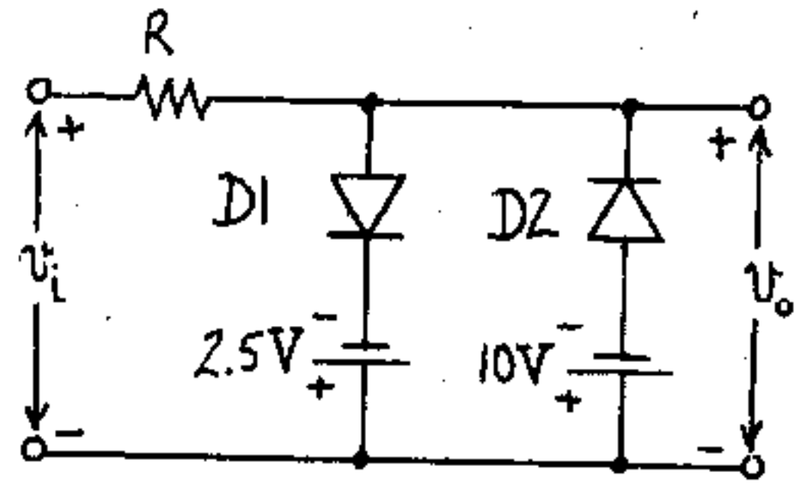

10-22 (a) From Eq. (10-10) we have $R = \frac{V - V_Z}{I} = \frac{V - V_Z}{I_Z + I_L}$

$= \frac{300-220}{15+25} \frac{\text{V}}{\text{mA}} = \underline{2\text{ k}\Omega}$

(b) From Eq. (10-10) we see that I remains constant. Since $I = I_Z + I_L$ if I_L decreases by 5 mA I_Z will increase by 5 mA so $I_Z = \underline{20\text{ mA}}$

(c) Again from Eq. (10-10) $I = \frac{V - V_Z}{R} = \frac{340-220}{2}$ mA

$= 60$ mA and $I_Z = I - I_L = (60-25)$ mA $= \underline{35\text{ mA}}$

(d) For $R = 1.5\text{ k}\Omega$ $I = \frac{340-220}{1.5}$ mA $= 80$ mA

So $I_{L,\,max} = (80-3)$ mA $= \underline{77\text{ mA}}$ and

$I_{L,\,min} = (80-50)$ mA $= \underline{30\text{ mA}}$

10-23 (a) It is given that $I_{Z,\,max} = 50$ mA and $I_{Z,\,min} = 10$ mA. When we have diode breakdown with $R_L = \infty$ (or $I_L \approx 0$) $I_{Z,\,max} \approx I = \frac{V - V_Z}{R}$ or

$\frac{200-40}{R} = 50\text{ mA} \Rightarrow R = \underline{3.2\text{ k}\Omega}$

(b) When $R_L = R_{L,\,min}$, $I_L = I_{L,\,max}$ and $I_Z = I_{Z,\,min}$

$I_{L,\,max} = I - I_{Z,\,min} = (50-10)$ mA $= \underline{40\text{ mA}}$

Remembering that the voltage across R_L is $V_Z = 40$ V we have $R_{L,\,min} = V_Z / I_{L,\,max} = \frac{40\text{ V}}{40\text{ mA}}$

$= \underline{1\text{ k}\Omega}$

(c) We have $I_L = V_Z/R_L = \frac{40}{2}$ mA = 20 mA. Then:

$I_{min} = I_{Z,min} + I_L = (10+20)$ mA = 30 mA

$I_{max} = I_{Z,max} + I_L = (50+20)$ mA = 70 mA

So $I_{min} \le I \le I_{max}$ or calculating "worst cases"

$30 \text{ mA} \le \frac{160-40}{R}$ and $\frac{300-40}{R} \le 70$ mA or

$R \le \frac{120}{30}$ kΩ = 4 kΩ and 3.71 kΩ ≤ R so

$R_{min} = \underline{3.71 \text{ k}\Omega}$ and $R_{max} = \underline{4 \text{ k}\Omega}$

(d) $R = \frac{1}{2}(R_{max} + R_{min}) = 3.855$ kΩ. Then:

for V = 160 V $I = \frac{160-40}{3.855}$ mA = 31.13 mA and

$I_Z = (31.13-20)$ mA = $\underline{11.13 \text{ mA}}$

for V = 300 V $I = \frac{300-40}{3.855}$ mA = 67.44 mA and

$I_Z = (67.44-20)$ mA = $\underline{47.44 \text{ mA}}$

10-24 When $v_i = 25$ V the current through the Zener diode is negligible. So the current I through R_1 is almost the same as that through R_2. Hence:

$25 \text{ V} = (R_1+R_2+R_m)I$ or since I = 0.2 mA

$R_1+R_2 = (\frac{25}{0.2} - 0.56)$ kΩ = 124.44 kΩ

when $v_i > 25$ V we have Zener breakdown and the drop across R_2 is $v_i - V_Z = 25-20 = 5$ V.

$\therefore R_2 = \frac{5}{0.2} = 25$ kΩ

10-25 (a) $I_m = \frac{V_m}{R_f + R_L} = \frac{100\sqrt{2}}{.51}$ mA = $\underline{277.3 \text{ mA}}$

(b) $I_{dc} = \frac{I_m}{\pi} = \underline{88.27 \text{ mA}}$

(c) $I_{rms} = \frac{I_m}{2} = \underline{138.65 \text{ mA}}$

(d) $V'_{dc} = -I_{dc}R_L = \underline{-44.135 \text{ V}}$

(e) $P_i = I^2_{rms}(R_f+R_L) = (138.65)^2(.51)$ mW = 9.8 W

(f) % regulation $= \frac{V_{NL}-V_{FL}}{V_{FL}}(100\%)$

$$= \frac{V_m/\pi - I_{dc}R_L}{I_{dc}R_L}(100\%)$$

$$= \frac{100\sqrt{2}/\pi - 88.27 \times 0.5}{88.27 \times 0.5}$$

$$= \frac{45.02-44.135}{44.135} \times 100\% = \underline{2\%}.$$

10-26 $P_{dc} = V_{dc}I_{dc} = I^2_{dc}R_L = \frac{V^2_m}{\pi^2(R_f+R_L)^2}R_L$

To find the maximum we get $\frac{dP_{dc}}{dR_L} = 0$

or $\frac{V^2_m}{\pi^2}\left[\frac{(R_f+R_L)^2 - R_L 2(R_f+R_L)}{(R_f+R_L)^4}\right] = 0$ or

$R_f + R_L - 2R_L = 0$ or $R_L = R_f$

10-27 (a) $\eta_r = \frac{P_{dc}}{P_i} \times 100\% = \frac{I^2_{dc}R_L}{I^2_{rms}(R_f+R_L)}(100\%)$

$$= \left(\frac{I_{dc}}{I_{rms}}\right)^2 \frac{100\%}{1+R_f/R_L} = \left(\frac{I_m/\pi}{I_m/2}\right)^2 \frac{100\%}{1+R_f/R_L}$$

$$= \left(\frac{2}{\pi}\right)^2 \frac{100\%}{1+R_f/R_L} = \frac{40.5}{1+R_f/R_L}\%$$

(b) For the full-wave rectifier

$$\left(\frac{I_{dc}}{I_{rms}}\right)^2 = \left(\frac{2I_m/\pi}{I_m/\sqrt{2}}\right)^2 = \left(\frac{2\sqrt{2}}{\pi}\right)^2 = 2\cdot\left(\frac{2}{\pi}\right)^2$$

Hence now η_r has twice the value given at part (a)

10-28 % Regulation $= \frac{V_{NL}-V_{FL}}{V_{FL}}(100\%)$

For the half-wave rectifier: $V_{FL} = \frac{V_m}{\pi}\frac{R_L}{R_f+R_L}$ and

$V_{NL} = \frac{V_m}{\pi}$ so

% Regulation $= \frac{1 - R_L/(R_f+R_L)}{R_L/(R_f+R_L)}(100\%) = \frac{R_f}{R_L}(100\%)$

For the full wave rectifier both V_{NL} and V_{FL} have twice the value for the half-wave rectifier. So the regulation remains the same.

10-29 (a)

(i) $I_{dc} = \frac{1}{2\pi}\int_0^{2\pi} i(\alpha)d\alpha = \frac{2}{2\pi}\int_0^{\pi} I_m \sin\alpha\, d\alpha$ because the two half cycles are identical for a full wave. Thus

$$I_{dc} = \frac{I_m}{\pi}[-\cos\pi + \cos 0] = \frac{2I_m}{\pi}$$

(ii) $I^2_{rms} = \frac{1}{2\pi}\int_0^{2\pi} i^2(\alpha)d\alpha = \frac{2I^2_m}{2\pi}\int_0^{\pi}\sin^2\alpha\, d\alpha =$

$$\frac{I^2_m}{2\pi}\int_0^{\pi}(1-\cos 2\alpha)d\alpha = \frac{I^2_m}{2\pi}\left(\int_0^{\pi}d\alpha - \int_0^{\pi}\cos 2\alpha\, d\alpha\right) =$$

$$\frac{I^2_m}{2\pi}\left(\pi - \frac{1}{2}\sin 2\pi + \frac{1}{2}\sin 0\right) = \frac{I^2_m}{2} \text{ or } I_{rms} = \frac{I_m}{\sqrt{2}}$$

(iii) $V_{dc} = I_{dc}R_L = \frac{2I_m}{\pi}R_L$ (1) To prove Eq. (10-25) we use Eq. (10-13) $I_m = V_m/(R_L+R_f)$ or

$I_mR_L = V_m - I_mR_f$ (2)

Combining (1) and (2) gives $V_{dc} = \frac{2}{\pi}I_mR_L = \frac{2}{\pi}V_m - \frac{2}{\pi}I_mR_f$

(b) From Fig. 10-14 $v = v_i\frac{R_f}{R_L+R_f} = V_m \sin\alpha\frac{R_f}{R_L+R_f}$

where the diode is ON and

$$v = 2v_i - \frac{R_f}{R_L+R_f}v_i = V_m\sin\alpha\left(2-\frac{R_f}{R_L+R_f}\right)$$

when the diode is OFF. Thus

$$V'_{dc} = \frac{1}{2\pi}\int_0^{2\pi} v(\alpha)d\alpha$$

$$= \frac{V_m}{2\pi}\left(\int_0^{\pi}\frac{R_f}{R_L+R_f}\sin\alpha d\alpha + \int_{\pi}^{2\pi}\frac{2R_L+R_f}{R_L+R_f}\sin\alpha d\alpha\right)$$

$$= \frac{V_m}{2\pi}\left[-\frac{R_f}{R_L+R_f}(\cos\pi - \cos 0) - \frac{2R_L+R_f}{R_L+R_f}(\cos 2\pi - \cos\pi)\right]$$

$$= \frac{V_m}{2\pi}\left(\frac{2R_f}{R_L+R_f} - \frac{4R_L+2R_f}{R_L+R_f}\right) = \frac{-2V_m}{\pi}\frac{R_L}{R_L+R_f}$$

$$= -\frac{2I_m R_L}{\pi} = -V_{dc} = -(\text{the average load voltage})$$

A simpler proof follows:

From Fig. 10-14 $V_m \sin\alpha = v' + iR_L$ where v' is the diode voltage. Taking the average value of both sides, we get

$$0 = V'_{dc} + I_{dc}R_L \quad \text{or} \quad V'_{dc} = -I_{dc}R_L = -V_{dc}$$

10-30 See Fig. (10-14)

(a) From Eq. (10-24) and (10-13) we have:

$$I_{dc} = \frac{2I_m}{\pi} = \frac{2V_m}{\pi(R_L+R_f)} = \frac{2\times 200\sqrt{2}}{\pi(1+0.3)}\text{ mA} = \underline{138.5\text{ mA}}$$

(b) $I_{dc,\,tube} = \frac{1}{2}I_{dc} = \underline{69.25\text{ mA}}$

(c) The voltage v across a conducting tube T1 is

$v_1 = v_i\frac{R_f}{R_L+R_f} = \frac{300}{1300}v_i = 0.23\,v_i$ where v_i is the voltage to the center tap or $v_1 = 0.23\,V_m\sin\alpha$. In the next half cycle T1 is non-conducting and T2 is conducting. By transversing the outside path of the circuit:

$$v_1 = 2v_i - v_2 = 2v_i - 0.23v_i = 1.77v_i = 1.77\,V_m\sin\alpha.$$

Note that v_1 is negative because $\pi \le \alpha \le 2\pi$.

So we have

$$V^2_{rms} = \frac{1}{2\pi}\left[\int_0^{2\pi} v_1^2\,dt\right] = \frac{V_m^2}{2\pi}\left[\int_0^{\pi}(0.23)^2\sin^2\alpha d\alpha + \int_{\pi}^{2\pi}(1.77)^2\sin^2\alpha\,d\alpha\right]$$

$$= \frac{V_m^2}{4\pi}\left[(0.23)^2\pi + (1.77)^2(2\pi-\pi)\right]$$

$$= 0.796\,V_m^2$$

Hence $V_{rms} = 0.892\,V_m = 0.892\times 200\sqrt{2}\text{ V} = \underline{252.42\text{ V}}$

(d) $P_{dc} = I^2_{dc}R_L = (138.5)^2\times 1\text{ mA} = \underline{19.18\text{ W}}$

10-31

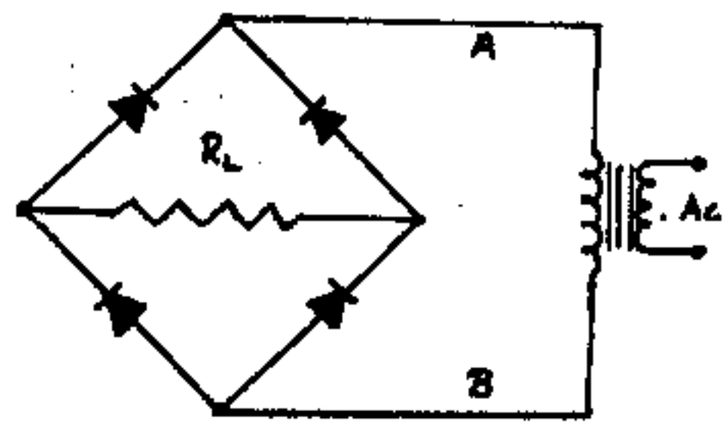

If the load and the transformer are interchanged then the circuit of the figure results. If A is positive with respect to B all diodes are reverse biased, while if A is negative with respect to B all diodes are ON short-circuiting the transformer. Hence, the load and transformer can not be interchanged.

10-32 (a) From the discussion following fig. 10-15 we see that two diodes conduct simultaneously in each half cycle. Thus

$$i_L = \frac{v_s}{R+2R_f} \quad \text{for} \quad 0 \le \omega t < \pi$$

with D_4 and D_1 conducting.

Since i_L is a rectified sinusoid with

$$I_{L,\,max} = \frac{100}{.05+2\times 0.1} = \frac{100}{.25}\text{ mA} = \underline{400\text{ mA}},$$ then the waveform is as plotted.

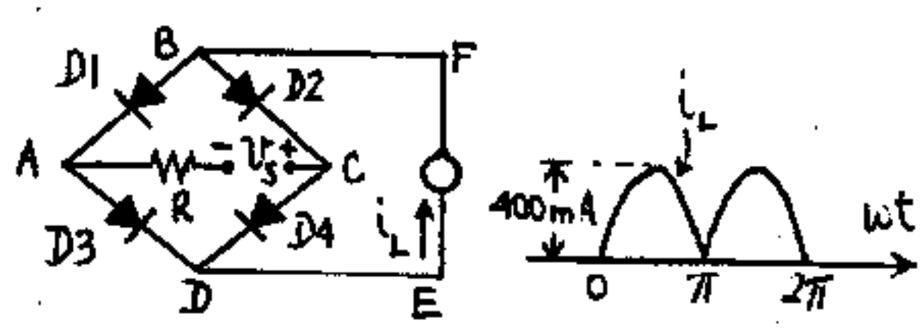

(b) $$I_{dc} = \frac{1}{2\pi}\int_0^{2\pi} i\,d\alpha = \frac{2I_{L,\,max}}{2\pi}\left[\int_0^{\pi}\sin\alpha d\alpha\right]$$

$$= \frac{2}{\pi}I_{L,\,max} = \underline{254.66\text{ mA}}$$

(c) When the diode is ON $v_{D1} = i_L R_f$

$= \frac{100 \sin \omega t}{R+2R_f} R_f$ and $V_{D1,\,max} = I_{L,\,max} R_f = 40$ V.

Hence $v_{D1} = 40 \sin \omega t$

When the diode OFF i_L passes through D2 and D3. Taking KVL around ADEFBA we find that

$v_{D1} + v_{D3} + i_L R_L = 0$ or, since $R_L = 0$

$v_{D1} = -v_{D3}$. Thus $v_{D1} = 40 \sin \omega t$, and therefore the waveform for v_{D1} is a pure sinusoid and $v_{D1,\,dc} = 0$.

(d) $V_{D,\,rms} = \left(\frac{1}{2\pi}\int_0^{2\pi} (40)^2 \sin^2 a\, da\right)^{1/2}$

$= \frac{40}{\sqrt{2}}$ V $= \underline{28.28 \text{ V}}$

10-33 From Eq. (10-24) and (10-13) we have $I_{dc} = \frac{2I_m}{\pi}$

$= \frac{2}{\pi}\frac{V_m}{R_L+R_f} = \frac{2\sqrt{2}\,V_{rms}}{\pi(R_L+R_f)}$ or since $I_{dc} = 10$ mA

$V_{rms} = \frac{10 \times \pi \times 10.02}{2\sqrt{2}} = \underline{111.3 \text{ V}}$

10-34 (a) When the upper diode is ON the upper capacitor charges through the diode to V_m. When the diode goes OFF, the capacitor cannot discharge. Hence it retains the voltage V_m and the diode remains OFF from this time on, since the input voltage never exceeds V_m (thus the diode voltage never exceeds zero). Similarly for the lower diode and capacitor. Therefore at no load the output voltage is $v_o = 2V_m$ and the circuit is a voltage doubler.

(b) When one of the diodes is OFF it is reverse biased by both the transformer voltage and the voltage of its respective capacitor. Therefore the PIV across each diode is $V_m + V_m = 2V_m$

10-35

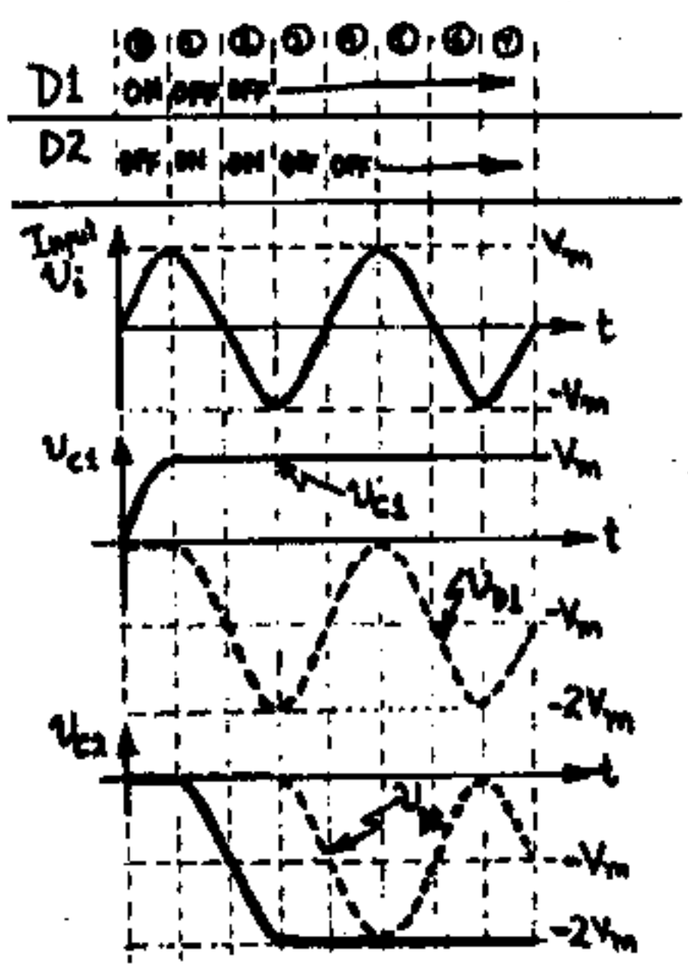

(a) Assume that the capacitors are initially uncharged, i.e. $v_{C1} = v_{C2} = 0$. As shown in the figure, in the initial period 0, D1 is ON and C1 charges up to V_m. Now, as soon as the input drops below V_m, D1 goes OFF (since v_{C1} cannot change instantaneously). Hence C1 stays at V_m unable to discharge. The output $v_{D1} = v_i - v_{C1}$ is shown as a dashed line. Notice that $v_{D1} \le 0$ since $v_i \le V_m$ and $v_{C1} = V_m$. Hence D1 remains OFF permanently.

Now, consider the effect of v_{D1} on D2 and C2. As soon as v_{D1} goes negative, D2 goes ON and C2 charges to $-2V_m$, which is the peak value of v_{D1} as indicated in the figure. Since $v_{D2} = v_{C2} - v_{D1}$, we see that $v_{D2} \le 0$ and D2 remains OFF throughout the rest of the process and $v_o = v_{C2} = -2V_m$.

(b) From the above discussion the PIV across D1 is $2V_m$. For D2 we note that when D1 is ON D2 is reverse biased by the voltage of C_2, so PIV for D2 is also $2V_m$.

For the bridge doubler of Fig. 10-17 the PIV across each diode is also $2V_m$ but the peak voltage of each capacitor is V_m. Also the regulation of the bridge circuit should be better since the load is across the two capacitors in series.

If the connections to the cathode and anode of each diode are interchanged, the direction of the current flow is reversed so that the capacitors charge with opposite polarities and the output will be positive with respect to ground.

10-36

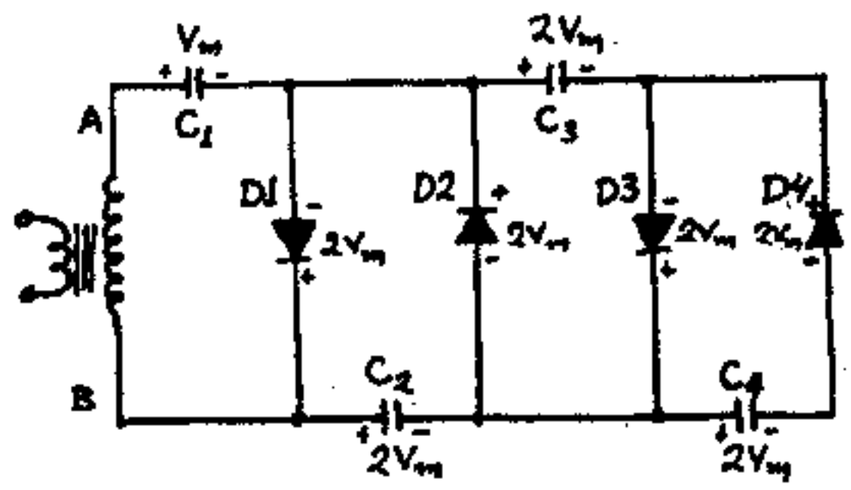

(a, b) when A is positive w.r.t. B D1 is ON and C_1 charges through D1 to V_m with the polarity shown. When A is negative w.r.t. B D1 is backbiased by a PIV of $2V_m$ and D2 is forward biased so that C_2 is charged to $2V_m$.

When A is again positive w.r.t. B and D1 is ON C_2 is put in parallel with D2 so that PIV across

D2 is $2V_m$. This polarity causes D3 to conduct and C_3 charges to $2V_m$.

When A is again negative w.r.t. B, and D2 is ON C_3 is put in parallel with D3 so that PIV across D3 is $2V_m$. This polarity causes D4 to conduct and C_4 charges to $2V_m$.

So the circuit acts as a quadrupler if the output is taken across C_2 and C_4 and as a trippler if it is taken across C_1 and C_3.

(c)

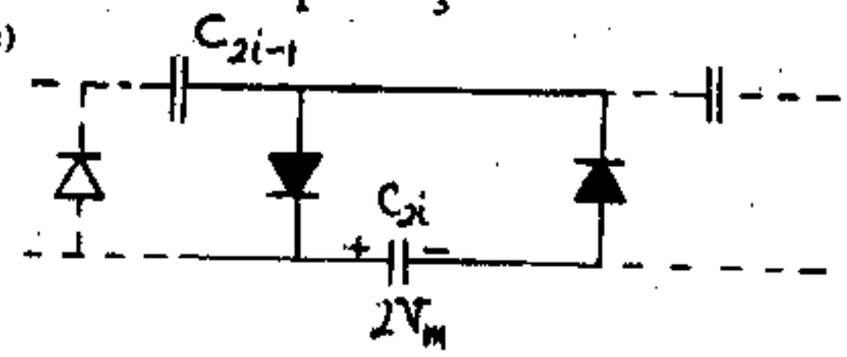

The ith stage has the form of the figure. Each C_{2i} capacitor charges to an additional $2V_m$ and the output voltage will be the sum of the voltages across $C_2, C_4, \ldots C_{2i} \ldots$ or multiplication by any integral n where n is even is possible. For n=6 one such stage is added to the initial circuit.

(d) If the output is taken across the odd-indexed capacitors $C_1, C_3, \ldots C_{2i-1}$ multiplication by n odd is possible as discussed in (a)

10-37 (a) When the diode conducts $v_o = V_m \sin\omega t$ and i is the sum of load resistor current and the capacitor current. Hence

$$i = i_L + i_C = \frac{v_o}{R_L} + C\frac{dv_o}{dt} = \frac{V_m \sin\omega t}{R_L} + \omega C V_m \cos\omega t$$

$$= I_m \sin(\omega t + \psi) \text{ where } I_m = V_m\sqrt{\frac{1}{R_L^2} + \omega^2 C^2} \text{ and}$$

$$\psi = \arctan \omega C R_L.$$

(b) We find the cutout angle $\alpha_1 = \omega t_1$ by setting $i(t_1) = 0$ or $\omega t_1 + \psi = \pi$, or $\omega t_1 = \pi - \psi$

10-38 (a) Proceeding as in Prob. 10-37

$$\alpha_1 = \pi - \arctan(\omega C R_L) = \pi - \arctan(2\pi \times 60 \times 50 \times 10^{-6} \times 300)$$

$$= \pi - \arctan(5.65) = 180^\circ - 80^\circ = \underline{100^\circ}$$

(b) $$i = V_m\sqrt{\frac{1}{R_L^2} + \omega^2 C^2}\ \sin(\omega t + \psi)$$

$$= 40\sqrt{2}\sqrt{\left(\frac{1}{300}\right)^2 + (2\pi \times 60 \times 50 \times 10^{-6})^2}\ \sin(\omega t + 80^\circ)$$

$$= 1.08 \sin(\omega t + 80^\circ)\ \text{A}$$

When the diode is conducting $v_o = v = V_m \sin\omega t = 56.6 \sin\omega t$. Between the cutout time t_1 and the cutin time t_2, the capacitor discharges through the load resistor with a time constant CR_L so

$$v_o = (V_m \sin\omega t_1)e^{-(t-t_1)/CR_L} = (V_m \sin\omega t_1)e^{-(\omega t - \omega t_1)/\omega CR_L}$$

$$= (56.6 \sin 100^\circ)e^{-(\omega t - 100^\circ)/5.65 \text{ rad}}$$

$$= 55.7\, e^{-(\omega t - 100^\circ)/323.7^\circ}$$

This exponential intersects the curve $V_m \sin\omega t$ at ωt_2, the cutin angle. So ωt_2 is found graphically (see Fig. 1) to be $\underline{44^\circ}$. The peak current is $1.09 \sin(\omega t_2 + 80^\circ) = \underline{904 \text{ mA}}$

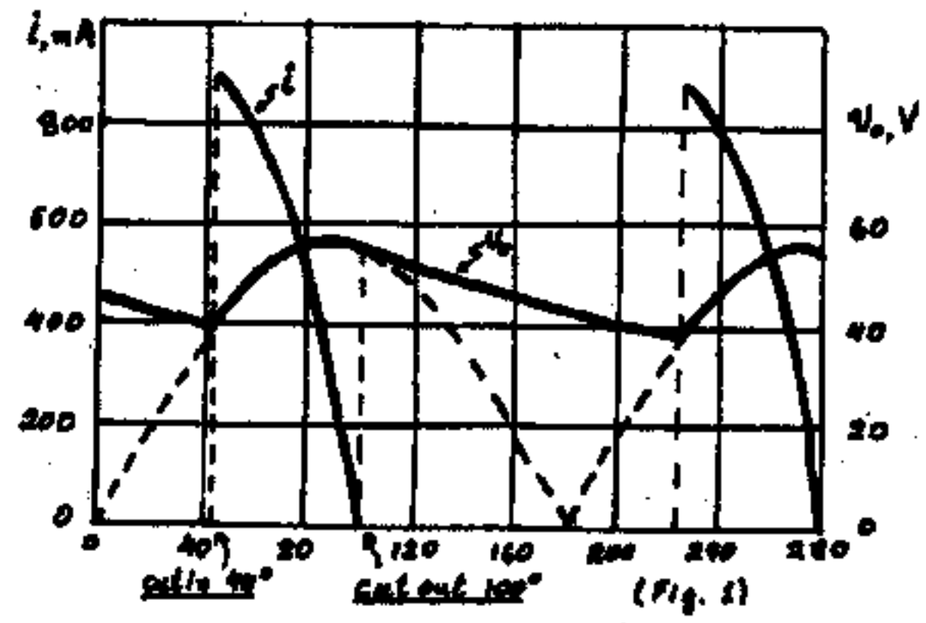

(Fig. 1)

(c) Now $\alpha_1 = \pi - \arctan(2\pi \times 60 \times 300 \times 150 \times 10^{-6})$

$$= 180^\circ - 86.6^\circ = \underline{93.4^\circ}$$

and $$i = 56.6\sqrt{\left(\frac{1}{300}\right)^2 + (2\pi \times 60 \times 150 \times 10^{-6})^2}\ \sin(\omega t + 86.6)$$

$$= 3.21 \sin(\omega t + 86.6^\circ)\text{A}$$

Diode conducting $v_o = 56.6 \sin\omega t$

Between t_1 and t_2: $v_o = (56.6 \sin 93.4)e^{-(\omega t - 93.4)/16.96}$

$$= 56.5e^{-(\omega t - 93.4^\circ)/972^\circ}$$

Again ωt_2 is found graphically (see Fig. 2). $\underline{\omega t_2 = 62^\circ}$ and the peak current is $3.21 \sin(62^\circ + 86.6^\circ) = \underline{1.67 \text{ A}}$

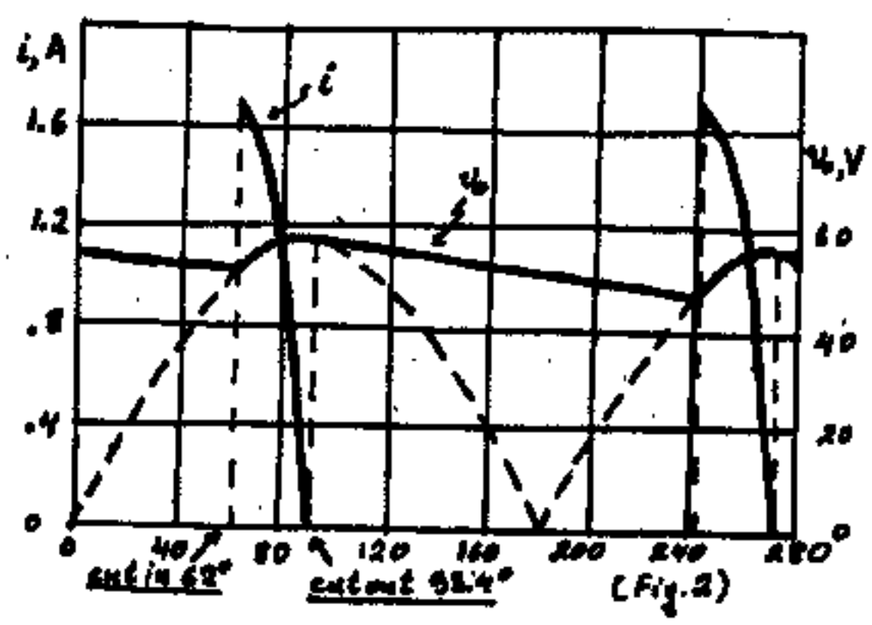

(Fig. 2)

10-39 R = ∞. Assume at t=0 that the capacitor is unchanged. As long as $v_1 < V_R$ the diode is OFF, the circuit is open and $v_o = v_1$. As soon as

$v_i = V_R$ the diode starts to conduct and the capacitor is being charged through the diode and $v_c = v_i - V_R$. On the other hand the output is constant: $v_o = V_R$. When v_i reaches the peak V_m and begins to drop the capacitor cannot discharge because the diode becomes reverse biased and retains its voltage of $v_c = V_m - V_R$. So the output is $v_o = v_i - (V_m - V_R)$.

During the next periods the diode remains OFF and the output waveforms have the form of the input with an average value of $V_R - V_m$

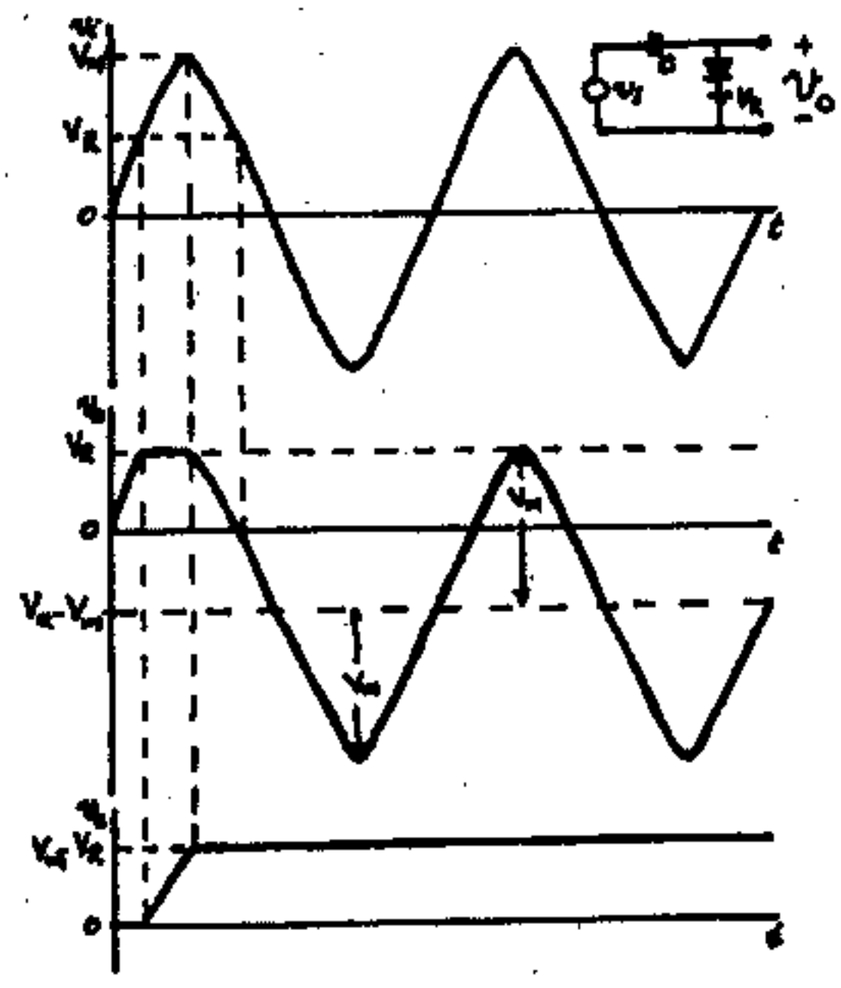

CHAPTER 11

11-1 (a) From Eqs. (11-3), $V = \frac{R_2 V_{CC}}{R_2 + R_1} = \frac{10 \times 12}{10+90} = 1.2$ V

and $R_b = \frac{R_2 R_1}{R_2 + R_1} = \frac{10 \times 90}{10+90} = 9\ k\Omega$

Using KVL around the base circuit yields Eq(11-4), or $V = I_B R_b + V_{BE} + (1+\beta) I_B R_e$, or,

$$I_B = \frac{V - V_{BE}}{R_b + (1+\beta) R_e} = \frac{1.2 - 0.7}{9 + 101 \times 0.1} = \underline{0.026\ mA}.$$

$I_C = \beta I_B = 100 \times 0.026 = \underline{2.6\ mA}$. $I_E = -(I_B + I_C) = \underline{-2.626\ mA}$.

$V_{CE} = V_{CC} - I_C R_c - (I_B + I_C) R_e = 12 - 2.6 \times 1.5 - 2.626 \times 0.1$

$= \underline{7.84\ V}$.

(b) V and R_b have the same value as in part (a). For Ge transistor, $V_{BE} = 0.2$ V. Using the same analysis as in part (a),

$$I_B = \frac{V - V_{BE}}{R_b + (1+\beta) R_e} = \frac{1.2 - .2}{9 + 101 \times 0.1} = \underline{0.052\ mA}.$$

$I_C = \beta I_B = 100 \times 0.052 = \underline{5.2\ mA}$.

$I_E = -(I_B + I_C) = \underline{-5.252\ mA}$.

$V_{CE} = V_{CC} - I_C R_C - (I_B + I_C) R_e = 12 - 5.2 \times 1.5 - 5.252 \times 0.1$

$= \underline{3.67\ V}$.

11-2 (a) From Eqs. (11-3), $V = \frac{R_2 V_{CC}}{R_2 + R_1} = \frac{3 \times 18}{3+27} = 1.8$ V

and $R_b = \frac{R_2 R_1}{R_2 + R_1} = \frac{3 \times 27}{3+27} = 2.7\ k\Omega$. For Si,

$V_{BE} = -0.6$ V.

Using KVL around the base circuit yields, Eq. (11-4), or $-V = I_B R_b + V_{BE} + (1+\beta) I_B R_e$, or,

$$I_B = \frac{-V - V_{BE}}{R_b + (1+\beta) R_e} = \frac{-1.8 + 0.6}{2.7 + 51 \times 0.2} = \underline{-0.093\ mA}$$

$I_C = \beta I_B = -0.093 \times 50 = \underline{-4.65\ mA}$. $I_E = -(I_B + I_C) = \underline{4.74\ mA}$.

$V_{CE} = -V_{CC} - I_C R_C - (I_B + I_C) R_e = -18 + 4.65 \times 2 + 4.74 \times 0.2$

$= \underline{-7.75\ V}$.

(b) R_b is now increased to $2.7 + 0.5 = 3.2\ k\Omega$.

$$I_B = \frac{-V - V_{BE}}{R_b + (1+\beta) R_e} = \frac{-1.8 + 0.6}{3.2 + 51 \times 0.2} = \underline{-0.0896\ mA}.$$

$I_C = \beta I_B = -0.0896 \times 50 = \underline{-4.48\ mA}$.

$I_E = -(I_B + I_C) = \underline{4.57\ mA}$

$V_{CE} = -V_{CC} - I_C R_C - (I_B + I_C) R_e = -18 + 4.48 \times 2 + 4.57 \times 0.2$

$= \underline{-8.13\ V}$.

11-3 Eq. (11-4) is

$$V = I_B R_b + V_{BE} + (I_B + I_C) R_e \qquad (1)$$

$$I_B = \frac{I_C}{\beta} = \frac{1.26}{50} = .0252 \text{ mA}$$

Thus, (1) becomes,

$$V = 0.0252\, R_b + 0.7 + (0.0252 + 1.26)\, 0.1$$

$$V = 0.0252 R_b + 0.829 \qquad (2)$$

From Eq. (11-3), $R_b = \frac{R_1 R_2}{R_1 + R_2} = 4.76 \text{ k}\Omega \qquad (3)$

Thus, $V = 0.949$.

From Eq. (11-3), $V = \frac{R_2}{R_1 + R_2} V_{CC}$, or, $\frac{0.949}{20}$

$$= \frac{R_2}{R_1 + R_2} = 0.04745$$

Solving for R_1 gives, $R_1 = R_2 \times 20.07$

Substituting into (3) gives

$$4.76 = \frac{R_2^2 \times 20.07}{R_2 \times 21.07} \quad \text{or} \quad \underline{R_2 = 5 \text{ k}\Omega}$$

Thus, $R_1 = 5 \times 20.07 = \underline{100.35 \text{ k}\Omega}$

11-4

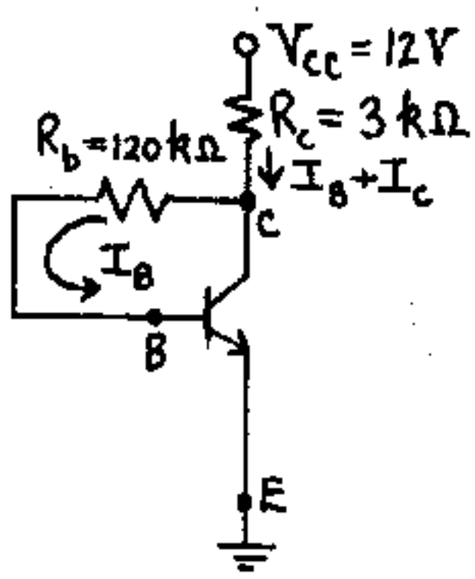

Applying KVL around loop V_{CC}-C-B-E gives,

$$V_{CC} = (I_B + I_C) R_c + I_B R_b + V_{BE} = (1+\beta) I_B R_C + I_B R_b + V_{BE}, \quad (1)$$

$$I_B = \frac{V_{CC} - V_{BE}}{R_b + (1+\beta) R_C} = \frac{12 - 0.7}{120 + 101 \times 3} = \underline{0.0267 \text{ mA}}.$$

$$I_C = \beta I_B = 100 \times 0.0267 = \underline{2.67 \text{ mA}}$$

$$V_{CE} = I_B R_b + V_{BE} = 0.0267 \times 120 + 0.7 = \underline{3.904 \text{ V}}.$$

(b) We set $V_{CE} = 6.5$ V; applying KVL to the emitter-collector circuit gives,

$$V_{CC} = (I_B + I_C) R_C + V_{CE} \quad \text{or,} \quad I_B + I_C = \frac{V_{CC} - V_{CE}}{R_C}$$

$$= \frac{12 - 6.5}{3} = 1.833 \text{ mA}.$$

Since $I_C = \beta I_B$, $I_B = \frac{1.833}{101} = 0.0181$ mA and

$$I_C = 1.81 \text{ mA}.$$

From (1) $\quad R_b = \frac{V_{CC} - V_{BE} - (I_B + I_C) R_C}{I_B}$

$$= \frac{12 - 0.7 - 1.83 \times 3}{0.0181}$$

$$= \underline{321 \text{ k}\Omega}.$$

11-5 (a) We rewrite Eqs. (11-4) and (11-6) as follows:

$$R_e I_C + (R_e + R_b) I_B = V - V_{BE}$$

$$I_C - \beta I_B = (1+\beta) I_{CO}$$

Solving the above two equations for I_C by Crammer's rule we get:

$$I_C = \frac{\begin{vmatrix} V - V_{BE} & R_e + R_b \\ (1+\beta) I_{CO} & -\beta \end{vmatrix}}{\begin{vmatrix} R_e & R_e + R_b \\ 1 & -\beta \end{vmatrix}} = \frac{-\beta(V - V_{BE}) - (R_e + R_b)(1+\beta) I_{CO}}{-(\beta R_e + R_e + R_b)}$$

$$I_C \left(\frac{R_b + R_e (1+\beta)}{\beta} \right) = V - V_{BE} + (R_e + R_b)\left(\frac{1+\beta}{\beta}\right) I_{CO}$$

which is Eq. (11-10)

(b) From Eq. (11-11),

$$\frac{I_{C2}}{I_{C1}} = \frac{\beta_2}{\beta_1} \frac{[R_b + R_e(1+\beta_1)]}{[R_b + R_e(1+\beta_2)]}$$

$$\frac{I_{C2}}{I_{C1}} - 1 = \frac{\beta_2}{\beta_1} \frac{[R_b + R_e(1+\beta_1)] - \beta_1 [R_b + R_e(1+\beta_2)]}{[R_b + R_e(1+\beta_2)]}$$

$$\frac{\Delta I_C}{I_{C1}} = \frac{(\beta_2 - \beta_1)(R_b + R_e)}{\beta_1 [R_b + R_e(1+\beta_2)]} = \frac{\Delta\beta (R_b + R_e)}{\beta_1 (1+\beta_2)\left(\frac{R_b}{1+\beta_2} + R_e\right)}$$

$$= \frac{\Delta\beta}{\beta_1 (1+\beta_2)} \frac{1 + \frac{R_b}{R_e}}{1 + \left(\frac{1}{1+\beta_2}\right) \frac{R_b}{R_e}}$$

Assuming $\beta_2 \gg 1$

$$\frac{\Delta I_C}{I_{C1}} = \left(1 + \frac{R_b}{R_e}\right) \frac{M_2 \Delta\beta}{\beta_1 \beta_2}, \text{ where}$$

$$M = \frac{1}{1 + \frac{R_b}{[R_e(1+\beta)]}}$$

11-6 $I_{C1} = 1.35$ mA, $\beta_1 = 40$; $I_{C2} = 1.65$ mA, $\beta_2 = 120$.

$$V_{CC} = 15 = R_c I_C + V_{CE} + R_e I_C = 2 \times 1.5 + 6 + R_e \times 1.5,$$

where I_B was neglected. Solve to obtain $R_e = \underline{4 \text{ k}\Omega}$.

From Eqs. (11-12) and (11-13) we have

$$\frac{I_{C2} - I_{C1}}{I_{C1}} \left(1 + \frac{R_b}{\beta_2 R_e}\right) = \left(1 + \frac{R_b}{R_e}\right) \frac{\beta_2 - \beta_1}{\beta_1 \beta_2}$$

$$\frac{1.65-1.35}{1.35}\left(1+\frac{R_b}{120\times4}\right)=\left(1+\frac{R_b}{4}\right)\frac{120-40}{40\times120}$$

We solve for R_b to obtain $R_b = \underline{55.5\ k\Omega}$

For $I_{CO}=0$, $\beta_1 = 40$, and $I_{C1} = 1.35$ mA

$V=V_{BE}+R_bI_B+R_e(I_B+I_C)$, and with $I_B=I_C/\beta$

$V=V_{BE}+(1/\beta)(R_b+R_e(1+\beta))I_C$

$=0.7+(1/40)(55.5+4\times41)1.35 = 8.11$ V

Now, from Eqs. (11-3) we obtain for R_1 and R_2

$$R_1=R_b\frac{V_{CC}}{V}=55.5\frac{15}{8.11}=\underline{102.65\ k\Omega}$$

$$R_2=\frac{R_1V}{V_{CC}-V}=\frac{102.65\times8.11}{15-8.11}=\underline{120.8\ k\Omega}$$

11-7 (a)

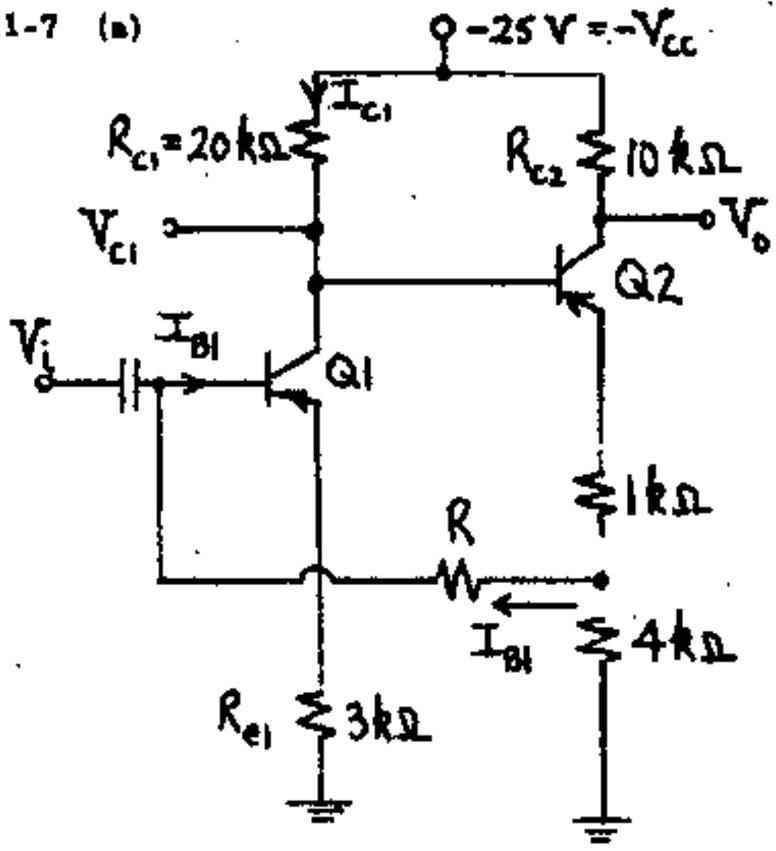

Neglect the base currents, while calculating the collector currents. Using KVL in the collector-emitter circuit of Q1,

$-V_{CC} \approx I_{C1}(R_{C1}+R_{e1})+V_{CE1}$

$-25 \approx I_{C1}(20+3)-5$, or, $I_{C1} \approx -0.87$ mA.

Similarly for Q2,

$-25 \approx I_{C2}(10+1+4)-6$, or, $I_{C2} \approx -1.27$ mA.

Using KVL in the base-emitter circuit of Q1 gives,

$V_{BE}+I_{C1}R_{e1} = I_{C2}\times4-I_{B1}R$

$-0.6-0.87\times3 = -1.27\times4-I_{B1}R$

$$1.87=-I_{B1}R,\ \text{or},\ R=-\frac{1.87}{I_{B1}}=-\frac{1.87\beta}{I_{C1}}=\frac{1.87\times100}{0.87}$$

$$\underline{R=214.9\ k\Omega}$$

(b) Bias stabilization is obtained via negative feedback through R and the emitter resistors. For example, if I_{C1} increases, the magnitude of V_{C1} decreases which reduces I_{B2}, I_{E2}, and I_{B1} which offsets the initial increase in I_{C1}.

11-8 Neglecting I_B, $V_{CC}=V_{CE}+I_C(R_c+R_e)$ or

$R_c+R_e=(V_{CC}-V_{CE})/I_C=(20-10)/1.3=7.69\ k\Omega$

Hence $R_c = 7.69-5 = 2.69\ k\Omega$

Now, with $\Delta\beta = 0$ and $\Delta V_{BE}=0$ we get from Eq. (11-14)

$$\frac{\Delta I_C}{\Delta I_{CO}} = 1+\frac{R_b}{R_e}\ M_1=(1+x)M_1<4$$

where $M_1=\dfrac{1}{1+\dfrac{R_b}{\beta R_e}}=\dfrac{1}{1+\dfrac{x}{\beta}}$ and

$x=R_b/R_e$. Thus $(1+x)\dfrac{1}{1+\dfrac{x}{\beta}}<4$ or

$(1+x)<4(1+\frac{x}{\beta})$ from which $x < 3.21$.

Thus $R_b < 3.21$ $R_e = 8.64\ k\Omega$.

$I_B=\dfrac{I_C}{\beta}=\dfrac{1.3}{60}=0.0217$ mA. KVL for the base-emitter circuit gives,

$V=I_BR_b+V_{BE}+(I_B+I_C)R_e=0.0217\times8.64+0.7+1.322\times2.69$

$=4.44$ V.

Solving Eqs. (11-4) for R_1 and R_2 gives,

$$R_1=\frac{R_bV_{CC}}{V}=\frac{8.64\times20}{4.44}=\underline{38.92\ k\Omega}.$$

$$R_2=\frac{R_1V}{V_{CC}-V}=\frac{38.92\times4.44}{20-4.44}=\underline{11.11\ k\Omega}.$$

11-9 Since $\Delta I_{CO}=0$, then, from Eq. (11-16),

$$\frac{\Delta I_C}{I_{C1}}=-\frac{M_1\Delta V_{BE}}{I_{C1}R_e}+\left(1+\frac{R_b}{R_e}\right)\frac{M_2\Delta\beta}{\beta_1\beta_2}$$

From Eq. (11-13), $M=\dfrac{1}{1+\dfrac{R_b}{\beta R_e}}$

From given information,

$$\frac{-M_1\Delta V_{BE}}{R_e}=0.1\ \text{and}\ I_{C1}\left(1+\frac{R_b}{R_e}\right)\frac{M_2\Delta\beta}{\beta_1\beta_2}=0.1$$

Assume $M_2 \approx 1$. Thus, $2(1+\dfrac{R_b}{R_e})\times\dfrac{150}{50\times200}=0.1$

or, $\dfrac{R_b}{R_e}=2.33$

$M_1=\dfrac{1}{1+\dfrac{2.33}{50}}=0.96$. Hence, $\dfrac{-0.96\times(-0.2)}{0.1}=$

$\underline{R_e=1.92\ k\Omega}$

$\therefore$ $R_b = 1.92\times2.33 = 4.47\ k\Omega$

To calculate R_C, apply KVL to collector circuit.

$V_{CC}=I_C R_C+V_{CE}+(I_B+I_C)R_e$

$20=2R_C+14+(\frac{2}{50}+2)\times 1.92$ or $R_C=\underline{1.04\ k\Omega}$

From KVL around the base-emitter circuit,

$V=I_B(R_b+R_e)+V_{BE}+I_C R_e$

$V=\frac{2}{50}\times(4.47+1.92)+0.8+2\times 1.92=\underline{4.9\ V}$

From Eqs. (11-3),

$R_1=R_b\times\frac{V_{CC}}{V}=\frac{4.47\times 20}{4.9}=\underline{18.24\ k\Omega}$

T^oC	+25	145
I_{CO}, nA	1	4096
V_{BE}, V	0.6	0.3

From Eq. (11-16), ΔI_C due to I_{CO} is given by

$\Delta I_C=(1+\frac{R_b}{R_e})\times M_1\Delta I_{CO}=(1+\frac{7.75}{4.7})\times 1\times 4096\times 10^{-6}$ mA

$=\underline{0.0109\ mA}$.

where $M_1\approx 1$ was assumed.

ΔI_C due to V_{BE} is given by

At 75°C, $M_2 = \dfrac{1}{1+\dfrac{R_b}{\beta_1 R_e}} = \dfrac{1}{1+\dfrac{16.66}{90\times 1}} = 0.844$

At -65°C, $M_2 = \dfrac{1}{1+\dfrac{16.66}{20}} = 0.546$

Using Eq. (11-16),

$$\frac{\Delta I_C(75^\circ C)}{I_{C1}} = \left(1+\frac{R_b}{R_e}\right)\frac{M_1 \Delta I_{CO}}{I_{C1}} - \frac{M_1 \Delta V_{BE}}{I_{C1} R_e} + \left(1+\frac{R_b}{R_e}\right)\frac{M_2 \Delta\beta}{\beta_1\beta_2}$$

$$= \frac{(1+16.66)\times 0.767\times 31\times 10^{-6}}{2\times 10^{-3}} + \frac{0.767\times 0.1}{2\times 10^{-3}\times 1\times 10^{3}} + \frac{17.66\times 0.844\times 35}{55\times 90} = 0.21+0.0384+0.105$$

$\Delta I_C(75^\circ C) = 0.42+0.0768+0.310 = 0.807$ mA

Thus, $I_C(75^\circ) = 2+0.807 = \underline{2.807 \text{ mA}}$.

Similarly, at -65°C,

$$\frac{\Delta I_C(-65^\circ C)}{I_{C1}} = \frac{17.66\times 0.767\times(-1\cdot 10^{-6})}{2\times 10^{-3}} - \frac{0.767\times 0.18}{2} - \frac{17.66\times 0.546\times 35}{55\times 20}$$

$$= -6.77\times 10^{-3} - 0.069 - 0.307$$

$\Delta I_C(-65^\circ C) = -1.35\times 10^{-2} - 0.138 - 0.614 = -0.766$ mA

Thus, $I_C(-65^\circ C) = 2-0.766 = \underline{1.234 \text{ mA}}$.

11-14 From Eq. (11-17),

$$\frac{\Delta I_C(175^\circ C)}{I_{C1}} = \frac{\Delta I_{CO}}{I_{C1}} - \frac{\Delta V_{BE}}{I_{C1} R_e} + \frac{\Delta\beta}{\beta_1\beta_2}$$

$$= \frac{33000\times 10^{-9}}{2\times 10^{-3}} + \frac{0.375}{2} + \frac{45}{55\times 100}$$

$$= 0.0165+0.188+8.18\times 10^{-3}$$

$\Delta I_C(175^\circ C) = 0.033+0.376+1.636\times 10^{-2} = 0.0425$ mA

Thus, $I_C(175^\circ C) = 2+0.0425 = \underline{2.0425 \text{ mA}}$.

$$\frac{\Delta I_C(-65^\circ C)}{I_{C1}} = \frac{-1\times 10^{-9}}{2\times 10^{-3}} - \frac{0.18}{2} - \frac{30}{55\times 25}$$

$$= -5\times 10^{-7} - 0.09 - 0.022 = -0.112$$

$\Delta I_C(-65^\circ C) = -0.224$ mA

Thus, $I_c(-65^\circ C) = 2-0.224 = \underline{1.78 \text{ mA}}$.

11-15 From Eq. (11-17)

$$\frac{\Delta I_C(75^\circ C)}{I_{C1}} = \frac{\Delta I_{CO}}{I_{C1}} - \frac{\Delta V_{BE}}{I_{C1} R_e} + \frac{\Delta\beta}{\beta_1\beta_2}$$

$$= \frac{31\times 10^{-6}}{2\times 10^{-3}} + \frac{0.1}{2} + \frac{35}{55\times 90}$$

$$= 1.55\times 10^{-2} + 0.05 + 0.007$$

$\Delta I_C(75^\circ C) = 3.1\times 10^{-2} + 0.1 + 0.014 = 0.145$ mA

Thus, $I_C(75^\circ C) = 2+0.145 = \underline{2.145 \text{ mA}}$.

$$\Delta I_C(-65^\circ C) = \frac{-1\times 10^{-6}}{2\times 10^{-3}} - \frac{0.18}{2} - \frac{35}{55\times 20}$$

$$= -5\times 10^{-4} - 0.09 - 0.032$$

$\Delta I_C(-65^\circ C) = -1\times 10^{-3} - 0.18 - 0.064 = \underline{-0.245 \text{ mA}}$

Thus, $I_C(-65^\circ C) = 2-0.245 = \underline{1.755 \text{ mA}}$.

11-16 We are given $\dfrac{\Delta I_C}{I_C} \le 0.15$. From Eq. (11-17),

$$\frac{\Delta I_C(65^\circ C)}{I_{C1}} = \frac{\Delta I_{CO}}{I_{C1}} - \frac{\Delta V_{BE}}{I_{C1} R_e} + \frac{\Delta\beta}{\beta_1\beta_2} \le 0.15$$

$$\frac{3\cdot 10^{-6} - 50\times 10^{-9}}{1\times 10^{-3}} + \frac{0.2}{1\times R_e} + \frac{1200-150}{1200\times 150} \le 0.15$$

Thus, $\underline{R_e = 1.42 \text{ k}\Omega}$

(Note; determination of $\Delta V_{BE} = -0.2$ V is given in step 3 of the last illustrative example of Sec. 11-4)

11-17 From Eq. (11-26), $g_m = \dfrac{|I_C|}{V_T} = \dfrac{1.5}{26} = 0.058$ ℧.

From Eq. (11-21), $h_{fe} = g_m r_{b'e} = 0.058\times 2\times 10^3 = \underline{116}$.

11-18 $A_V = \dfrac{-h_{fe} R_L}{h_{ie}} = \dfrac{-h_{fe} R_L}{r_{bb'} + r_{b'e}} = \dfrac{-h_{fe} R_L}{r_{b'e}}$ for $r_{bb'} \ll r_{b'e}$

From Eq. (11-21), $h_{fe} = g_m r_{b'e}$. Thus,

$$\underline{A_V = -g_m R_L} \qquad (1)$$

From Eq. (11-26), $g_m = \dfrac{|I_C|}{V_T}$. Applying KVL to the collector circuit gives,

$I_C = \dfrac{V_{CC} - V_o}{R_L}$. By substitution into (1)

$$A_V = -\frac{|I_C|}{V_T} \times R_L = -\frac{|V_{CC} - V_o|}{V_T}.$$

11-19

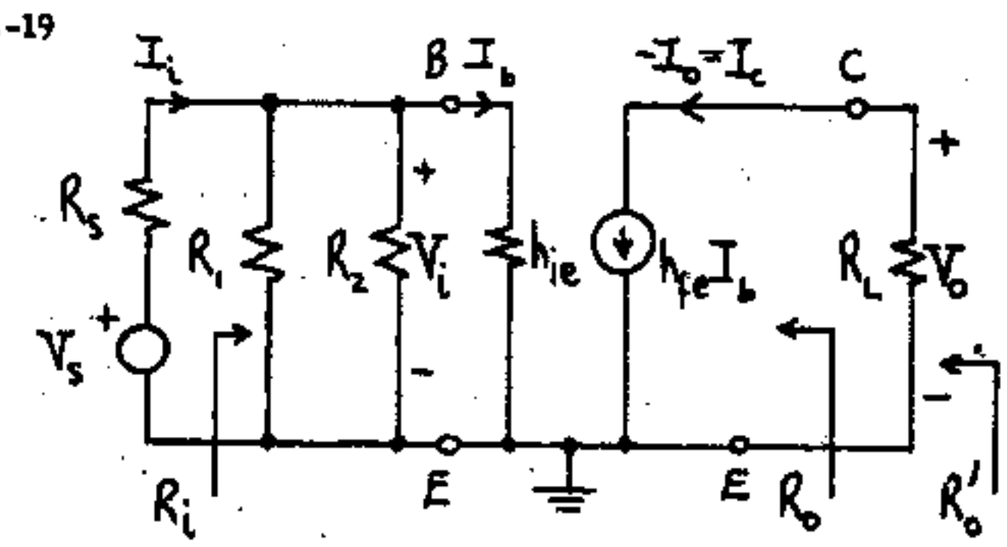

(a) $A_I = \dfrac{I_o}{I_i} = \dfrac{I_o}{I_b} \times \dfrac{I_b}{I_i} = \dfrac{-h_{fe} I_b}{I_b} \times \dfrac{R_1 \| R_2}{(R_1 \| R_2) + h_{ie}}$

$$= -200 \times \frac{9}{9+4} = \underline{-138.46}$$

(b) $R_i = R_1 \| R_2 \| h_{ie} = 90 \| 10 \| 4 = \underline{2.77 \text{ k}\Omega}$

c) $A_V = \dfrac{V_o}{V_i} = \dfrac{A_I R_L}{R_i} = \dfrac{-138.46\times 4}{2.77} = \underline{-199.9}$

d) $A_{V_s} = \dfrac{V_o}{V_s} = \dfrac{V_o}{V_i} \times \dfrac{V_i}{V_s} = A_V \times \dfrac{R_i}{R_s + R_i} =$

$$= -199.9 \times \frac{2.77}{5+2.77} = \underline{-71.28}$$

e) $\underline{R_o = \infty}$

f) $\underline{R_o' = R_L = 4 \text{ k}\Omega}$

11-20

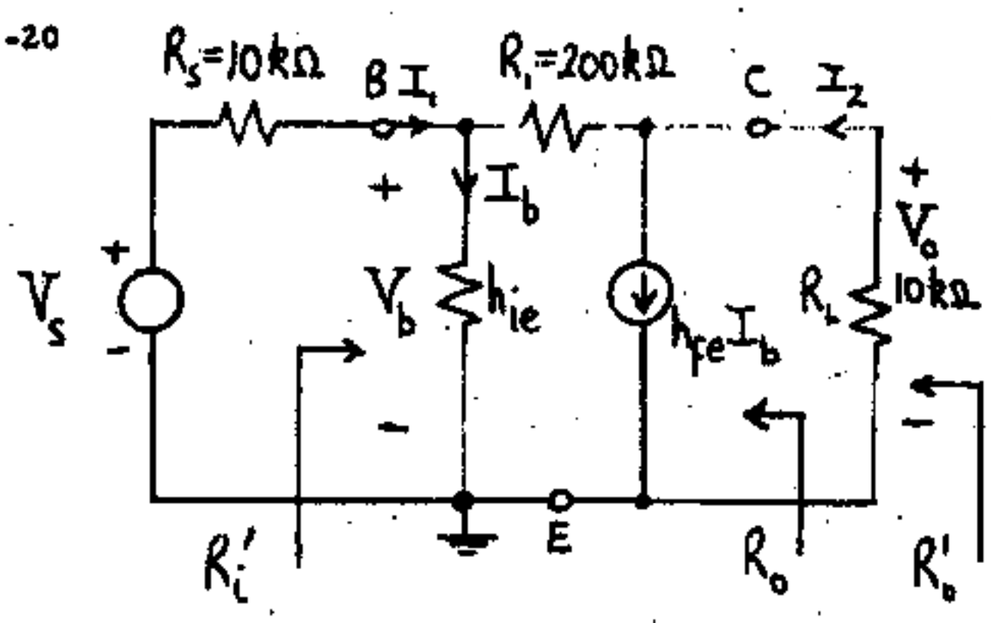

(a) $A_I = \frac{-I_2}{I_b}$. Using KVL around E-B-C-E gives,

$-h_{ie}I_b + R_1(h_{fe}I_b - I_2) - R_L I_2 = 0$

$-1.1\times I_b + 200(50I_b - I_2) - 10I_2 = 0$. Solving for $-\frac{I_2}{I_b}$ gives $-\frac{I_2}{I_b} = \underline{-47.62}$.

(b) $R_i = \frac{V_b}{I_b} = h_{ie} = \underline{1.1\ k\Omega}$

(c) $R_i' = \frac{V_b}{I_1} = \frac{h_{ie}I_b}{I_b + (h_{fe}I_b - I_2)} = \frac{h_{ie}I_b}{I_b + (h_{fe}I_b + A_I I_b)}$

$= \frac{1.1 \times I_b}{I_b + (50I_b - 47.62\,I_b)} = \underline{325\ \Omega.}$

(d) $A_I' = \frac{-I_2}{I_1} = \frac{-I_2}{I_b} \times \frac{I_b}{I_1} = \frac{A_I R_i'}{R_i} = \frac{-47.62\times 0.325}{1.1}$

$= \underline{-14.09}$

(e) $A_V = \frac{V_o}{V_b} = \frac{-I_2 R_L}{I_b h_{ie}} = \frac{A_I R_L}{h_{ie}} = \frac{-47.62\times 10}{1.1} = \underline{-432.9}$

(f) $A_{V_s} = \frac{V_o}{V_s} = \frac{A_V R_i'}{R_s + R_i'} = \frac{-432.91\times 0.325}{10+0.325} = \underline{-13.63}$

(g) Set $V_s=0$, $R_L=\infty$, apply external voltage V_2 and measure I_2 drawn from V_2. $R_o = \frac{V_2}{I_2}$

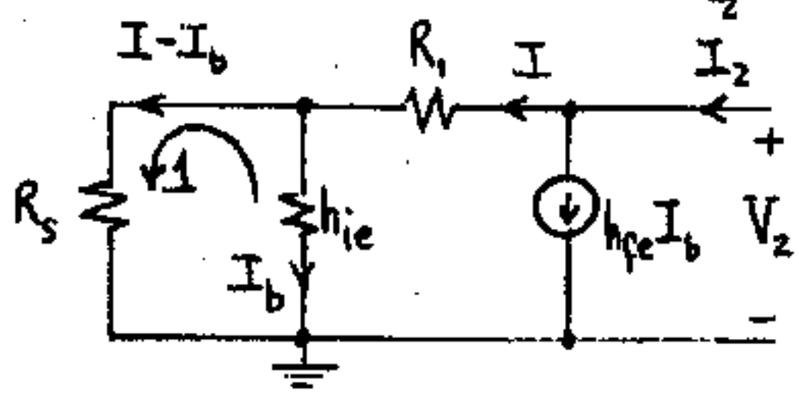

$I_2 = h_{fe}I_b + I = 50\,I_b + I$ (1)

from KVL around loop 1, $h_{ie}I_b = R_s(I - I_b)$

$1.1\,I_b = 10(I - I_b)$

$I = 1.11\,I_b$

Substituting into (1) gives, $I_2 = 50I_b + 1.11I_b = 51.11\,I_b$

$V_2 = R_1 I + h_{ie}I_b = R_1 \times 1.11I_b + h_{ie}I_b = 223.1\,I_b = \frac{223.1\times I_2}{51.11}$

or

$\frac{V_2}{I_2} = \frac{223.1}{51.11} = \underline{4.37\ \Omega}$

(h) $R_o' = R_o \| R_L = 4.37\ \Omega \| 10\ k\Omega = \underline{4.37\ \Omega}$

11-21 (a)

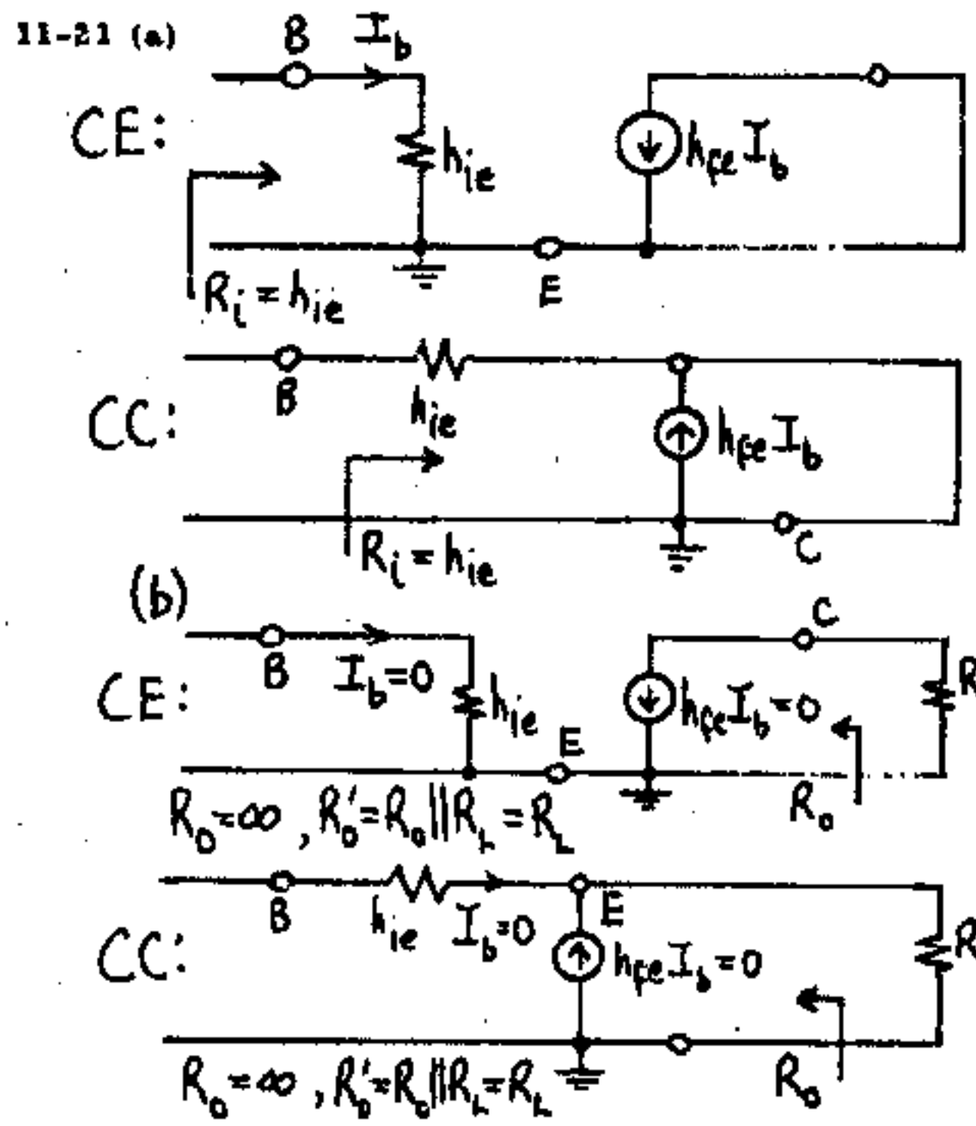

11-22

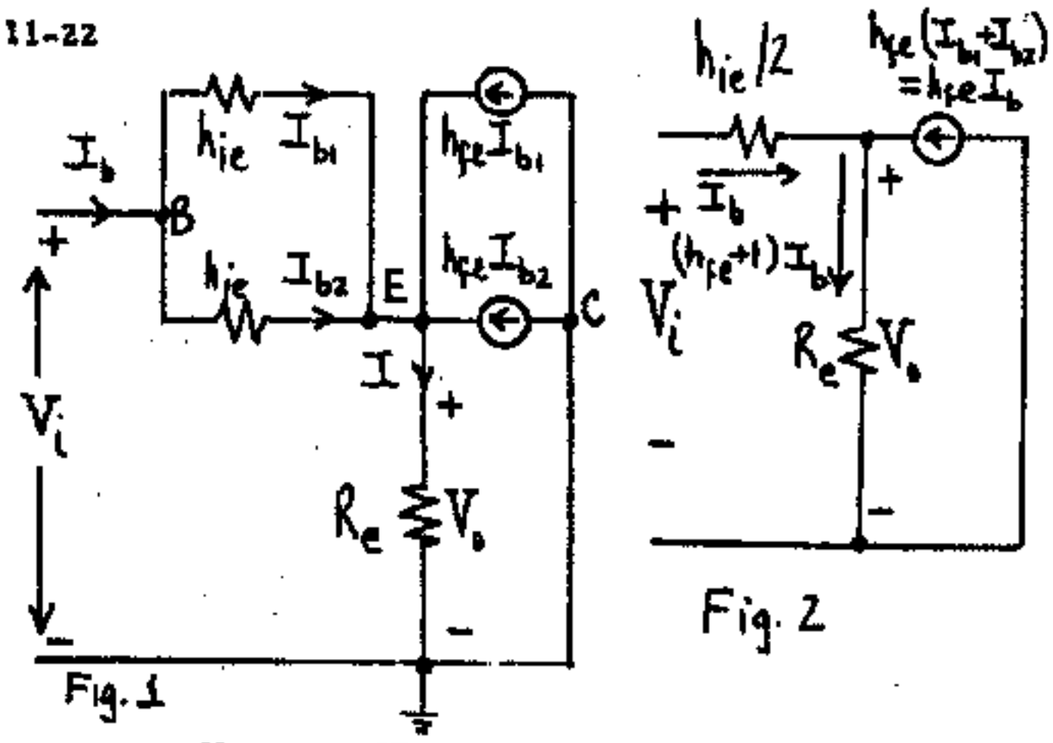

$A_V = \frac{V_o}{V_i} = \frac{IR_e}{I_{b1}h_{ie} + IR_e}$. From symmetry,

$I_{b1} = I_{b2} = \frac{I_b}{2}$. Thus, $I = h_{fe}I_{b1} + h_{fe}I_{b2} + I_{b1} + I_{b2}$

$= \frac{I_b}{2}(2h_{fe} + 2) = I_b(h_{fe}+1)$.

$\therefore\ A_V = \frac{I_b(h_{fe}+1)R_e}{\frac{I_b}{2}\times h_{ie} + I_b(h_{fe}+1)R_e} = \underline{\frac{2(h_{fe}+1)R_e}{h_{ie} + 2(h_{fe}+1)R_e}}$

$$R_i = \frac{V_i}{I_b} = \frac{I_{b1}h_{ie}+IR_e}{I_b} = \frac{\frac{I_b}{2}\times h_{ie}+I_b(h_{fe}+1)R_e}{I_b}$$

$$= \underline{\frac{1}{2}\times h_{ie}+(h_{fe}+1)R_e}\ .$$

An alternative solution: Since $I_{b1}=I_{b2}=I_b/2$ then the circuit model is as shown in Fig. 2:

$$A_V = \frac{V_o}{V_i} = \frac{(h_{fe}+1)I_bR_e}{[\frac{h_{ie}}{2}+(h_{fe}+1)R_e]I_b} = \frac{2(h_{fe}+1)R_e}{h_{ie}+2(h_{fe}+1)R_e}$$

$$R_i = \frac{h_{ie}}{2}+(h_{fe}+1)R_e$$

11-23

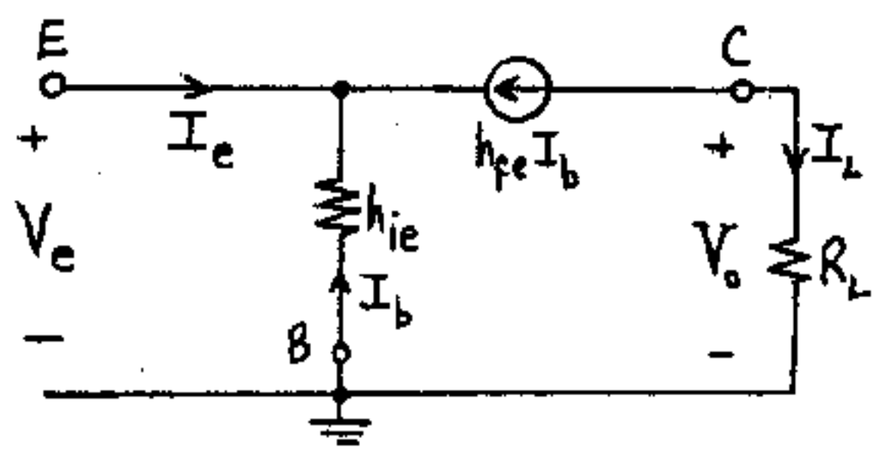

$$A_I = \frac{I_L}{I_e} = \frac{-h_{fe}I_b}{-(h_{fe}I_b+I_b)} = \frac{h_{fe}}{h_{fe}+1}$$

$$R_i = \frac{V_e}{I_e} = \frac{-h_{ie}I_b}{-(h_{fe}I_b+I_b)} = \frac{h_{ie}}{h_{fe}+1}$$

$$A_V = \frac{V_o}{V_e} = \frac{I_LR_L}{-h_{ie}I_b} = \frac{A_IR_L}{R_i} = \frac{h_{fe}R_L(h_{fe}+1)}{(h_{fe}+1)h_{ie}} = \frac{h_{fe}R_L}{h_{ie}}$$

To find R_o, set $V_e=0$, $R_L=\infty$ and impress an external voltage V across the output. Then $I_b=0$ and

$$\therefore\ R_o = \frac{V}{h_{fe}I_b} = \infty$$

$$R_o' = R_o \| R_L = R_L$$

11-24 (a) For CB configuration,

$$A_I = \frac{h_{fe}}{1+h_{fe}} = \frac{50}{51} = \underline{0.98}$$

$$R_i = \frac{h_{ie}}{1+h_{fe}} = \frac{1.1}{51} = \underline{21.6\,\Omega}$$

$$A_V = \frac{A_IR_L}{R_i} = \frac{0.98\times 3}{0.0216} = \underline{136.11}$$

$$R_o = \underline{\infty}$$

(b) For CC configuration,

$$A_I = 1+h_{fe} = \underline{51}$$

$$R_i = h_{ie}+(1+h_{fe})R_L = 1.1+51\times 3 = \underline{154.1\ k\Omega}$$

$$A_V = 1-\frac{h_{ie}}{R_i} = 1-\frac{1.1}{154.1} = \underline{0.993}$$

$$R_o = \frac{R_s+h_{ie}}{1+h_{fe}} = \frac{3+1.1}{51} = \underline{80.4\ \Omega}$$

(c) For CE configuration,

$$I_I = -h_{fe} = -50$$

$$R_i = h_{ie} = 1.1\ k\Omega$$

$$A_V = -\frac{h_{fe}R_L}{h_{ie}} = \frac{-50\times 3}{1.1} = -136.4$$

$$R_o = \infty$$

(d) Use the facts that $R_o' = R_o \| R_L$ and

$A_{V_s} = A_VR_i/(R_i+R_s)$ to get

CB: $R_o' = R_L = \underline{3\ k\Omega}$

$A_{V_s} = 136.11\times 0.0216/(3.0216) = \underline{0.97}$

CC: $R_o' = (3\times 0.0804)/3.0804 = 0.0783\ k\Omega = \underline{78.3\ \Omega}$

$A_{V_s} = 0.993\times 154.1/(154.1+3) = \underline{0.974}$

CE: $R_o' = R_L = \underline{3\ k\Omega}$

$A_{V_s} = -136.36\times 1.1/(1.1+3) = \underline{-36.58}$

11-25

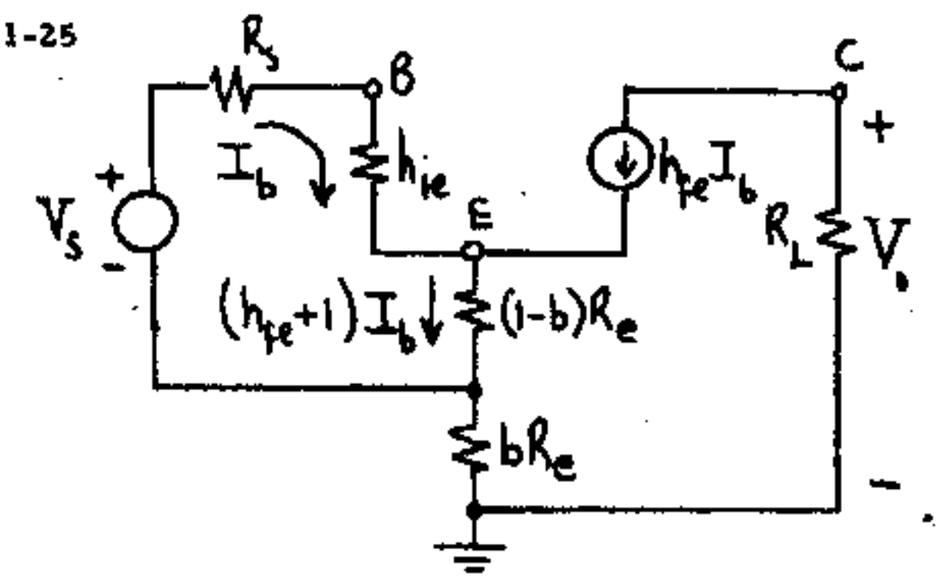

$$\frac{V_o}{V_s} = \frac{-h_{fe}I_bR_L}{I_b(R_s+h_{ie})+I_b(h_{fe}+1)(1-b)R_e}$$

$$= \frac{-h_{fe}R_L}{R_s+h_{ie}+(h_{fe}+1)(1-b)R_e}$$

$$R_i = \frac{V_s}{I_b} = \frac{I_b(R_s+h_{ie})+I_b(h_{fe}+1)(1-b)R_e}{I_b}$$

$$= R_s+h_{ie}+(1+h_{fe})(1-b)R_e$$

11-26

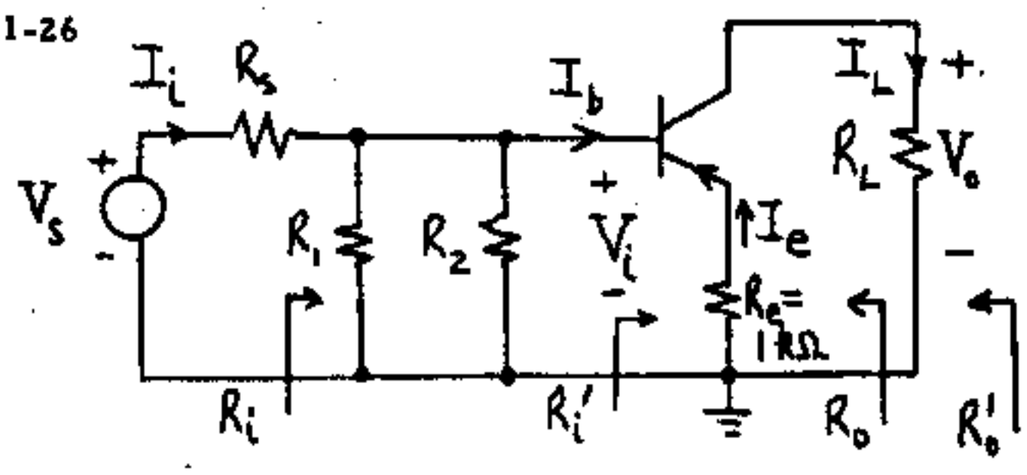

Using Table 11-4,

$R_i' = h_{ie}+(1+h_{fe})R_e = 4+201 \times 1 = 205\ k\Omega$

$R_i = R_1 \| R_2 \| R_i' = 90 \| 10 \| 205 = \underline{8.62\ k\Omega}$

$$A_I = \frac{I_o}{I_i} = \frac{I_L}{I_b} \times \frac{I_b}{I_i} = -h_{fe} \times \frac{R_1 \| R_2}{(R_1 \| R_2)+R_i'}$$

$$= -200 \times \frac{9}{9+205} = \underline{-8.41}$$

$$A_V = \frac{V_o}{V_i} = \frac{A_I R_L}{R_i} = \frac{-8.41 \times 4}{8.62} = \underline{-3.90}$$

$$A_{V_s} = \frac{V_o}{V_i} \times \frac{V_i}{V_s} = A_V \times \frac{R_i}{R_i + R_s} = -3.9 \times \frac{8.62}{8.62+5}$$

$$= \underline{-2.47}$$

$\underline{R_o = \infty}$

$R_o' = R_o \| R_L = R_L = \underline{4\ k\Omega}$

11-27 Refer to the figure of the preceeding problem Using Table (11-4),

$R_i' = h_{ie}+(1+h_{fe})R_e = 4+201 \times 1 = 205\ k\Omega$

$R_i = R_i' \| R_1 \| R_2 = 205 \| 90 \| 10 = 8.62\ k\Omega$

$$A_I = \frac{-I_e}{I_i} = \frac{-I_e}{I_b} \times \frac{I_b}{I_i} = (1+h_{fe}) \times \frac{R_1 \| R_2}{(R_1 \| R_2)+R_i'}$$

$$= \frac{201 \times 9}{9+205} = 8.45$$

$$A_V = \frac{V_o'}{V_i} = \frac{A_I R_e}{R_i} = \frac{8.45 \times 1}{8.62} = 0.98$$

$$A_{V_s} = A_V \times \frac{R_i}{R_i + R_s} = \frac{0.98 \times 8.62}{8.62+5} = \underline{0.62}$$

11-28 Using the approximate formulas in table (11-4), we have for the 2nd stage (which is CE)

$A_{I2} = -h_{fe} = \underline{-100}$

$R_{i2} = h_{ie} = \underline{3\ k\Omega}$

$$A_{V2} = \frac{-h_{fe} R_L}{h_{ie}} = \frac{-100 \times 3}{3} = \underline{-100}$$

$\underline{R_{o2} = \infty}$

For the 1st stage, (which is CC)

$A_{I1} = 1 + h_{fe} = 101$

$R_{i1} = h_{ie}+(1+h_{fe})R_{L1}$, where $R_{L1} = 10 \| 10 \| 90 \| 3 = 1.84\ k\Omega$

$R_{i1} = 3+(1+100)1.84 = \underline{188.84\ k\Omega}$

$$A_{V1} = 1 - \frac{h_{ie}}{R_{i1}} = 1 - \frac{3}{188.84} = \underline{0.984}$$

$R_{o1} = \dfrac{R_{s1}+h_{ie}}{1+h_{fe}}$, where $R_{s1} = 5 \| 90 \| 110 = 4.54\ k\Omega$.

$$R_{o1} = \frac{4.54+3}{1+100} = \underline{74.65\ \Omega}$$

For the overall amplifier,

$A_V = A_{V1}A_{V2} = 0.984 \times (-100) = \underline{-98.4}$

$R_i = R_{i1} \| 90 \| 110 = 188.84 \| 90 \| 110 = \underline{39.22\ k\Omega}$

$R_o' = R_L = \underline{3\ k\Omega}$

$$A_{V_s} = \frac{A_V R_i}{R_i + R_s} = \frac{-98.4 \times 39.22}{39.22+5} = \underline{-87.27}$$

$$A_I = \frac{I_o}{I_i} = \frac{A_V R_i}{R_{L2}} = \frac{-98.4 \times 39.22}{3} = \underline{-1287}$$

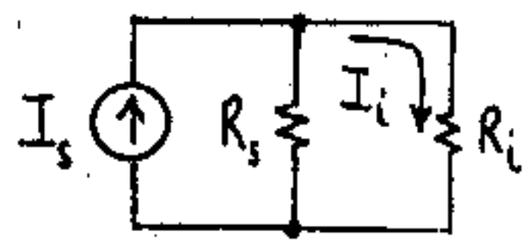

$A_{Is} = \dfrac{I_o}{I_s}$ where $I_s = V_s/R_s$

$$A_{Is} = \frac{I_o}{I_s} = \frac{I_o}{I_i} \frac{I_i}{I_s} = A_I \frac{R_s}{R_s+R_i} = -1286.5 \times \frac{5}{5+39.22}$$

$$= -145.5$$

11-29 For second stage,

$A_{I2} = -h_{fe} = \underline{-200}$

$R_{i2} = h_{ie} = \underline{4\ k\Omega}$

$$A_{V2} = \frac{-h_{fe} R_{L2}}{h_{ie}} = \frac{-200 \times 3}{4} = \underline{-150}$$

For first stage,

$A_{I1} = -h_{fe} = \underline{-200}$

$R_{i1} = h_{ie} = \underline{4\ k\Omega}$

$A_{V1} = \dfrac{-h_{fe} R_{L1}}{h_{ie}}$ where $R_{L1} = 10 \| 45 \| 5 \| h_{ie} = 1.75\ k\Omega$

$$= \frac{-200 \times 1.75}{4} = \underline{-87.5}$$

Overall,

$A_V = A_{V1}A_{V2} = -87.5 \times (-150) = \underline{13,125}$

$R_i = 100 \| 10 \| R_{i1} = \underline{2.78\ k\Omega}$

$R_o' = R_L = \underline{3\ k\Omega}$

$$A_{V_s} = \frac{A_V R_i}{R_i + R_s} = \frac{13,125 \times 2.78}{2.78+1} = \underline{9,653}$$

$$A_I = \frac{A_V R_{i1}}{R_{L2}} = \frac{13,125 \times 4}{3} = \underline{17,500}$$

11-30 For second stage,

$A_{I2} = -h_{fe} = \underline{-100}$

$R_{i2} = h_{ie}+(1+h_{fe})R_e = 4+(1+100) \times 0.1 = \underline{14.1\ k\Omega}$

$$A_{V2} = \frac{-h_{fe} R_L}{R_i} = \frac{-100 \times 3}{14.1} = \underline{-21.28}$$

$\underline{R_{o2} = \infty}$

For first stage,

$A_{I1} = -h_{fe} = \underline{-100}$

$R_{i1} = h_{ie} + (1+h_{fe})R_e = 4 + (1+100)\times 1 = \underline{105\ k\Omega}$

$A_{V1} = \dfrac{-h_{fe}R_{L1}}{R_{i1}}$, where $R_{L1} = 10 \| R_{i2} = 10 \| 14.1$

$= \underline{5.85\ k\Omega}$

$= \dfrac{-100 \times 5.85}{105} = \underline{-5.57}$

$\underline{R_{o1} = \infty}$

For the entire amplifier,

$A_V = A_{V1}A_{V2} = (-5.57)\times(-21.28) = \underline{118.5}$

$R_i = R_{i1} = \underline{105\ k\Omega}$

$A_I = \dfrac{A_V R_{i1}}{R_{L2}} = \dfrac{118.53 \times 105}{3} = \underline{4,149}$

$A_{V_s} = A_V \times \dfrac{R_i}{R_i + R_s} = \dfrac{118.53 \times 105}{105 + 5} = \underline{113.1}$

$R'_o = R_L = \underline{3\ k\Omega}$

11-31 For third stage,

$A_{I3} = 1 + h_{fe} = 51$

$R_{i3} = h_{ie} + (1+h_{fe})R_L = 2 + 51 \times 3 = 155\ k\Omega$

$A_{V3} = 1 - \dfrac{h_{ie}}{R_{i3}} = 1 - \dfrac{2}{155} = \underline{0.987}$

For second stage,

$A_{I2} = -h_{fe} = -50$

$R_{i2} = h_{ie} = 2\ k\Omega$

$A_{V2} = \dfrac{-h_{fe}R_{L2}}{h_{ie}}$, where $R_{L2} = 4 \| R_{i3} = 4 \| 155 = 3.9\ k\Omega$

$= \dfrac{-50 \times 3.9}{2} = \underline{-97.5}$

For first stage,

$A_{I1} = 1 + h_{fe} = 51$

$R_{i1} = h_{ie} + (1+h_{fe})R_{L1}$, where $R_{L1} = 3 \| R_{i2} = 3 \| 2 = 1.2\ k\Omega$

$= 2 + 51 \times 1.2 = 63.2\ k\Omega$

$A_{V1} = 1 - \dfrac{h_{ie}}{R_{i1}} = 1 - \dfrac{2}{63.2} = \underline{0.968}$

For overall amplifier,

$A_V = A_{V1}A_{V2}A_{V3} = 0.968 \times (-97.5) \times 0.987 = -93.15$

$R_i = R_{i1} \| 10 = 63.2 \| 10 = 8.63\ k\Omega$

$A_{V_s} = \dfrac{V_o}{V_s} = A_V \times \dfrac{R_i}{R_i + R_s} = \dfrac{-93.15 \times 8.63}{8.63 + 1} = \underline{-83.48}$

11-32 $h_{fe} \approx \left.\dfrac{\Delta I_C}{\Delta I_B}\right|_{V_{CE}}$ (1) $\qquad h_{oe} = \left.\dfrac{\Delta I_C}{\Delta V_C}\right|_{I_B}$ (2)

Since h_{fe} is the ratio of ΔI_C over ΔI_B with V_{CE} held fixed we draw a vertical line through Q (representing V_{CE}=constant = 5 V) and measure ΔI_B and ΔI_C on that line around the quiescent point. Thus we find

$h_{fe} = \dfrac{\Delta I_C}{\Delta I_B} = \dfrac{(33.3-16.7)mA}{(160.-80.)\mu A} = \underline{207.5}$

Since h_{oe} is found by keeping i_B constant, we stay on the curve I_B= 120 μA to find

$h_{oe} = \dfrac{\Delta I_C}{\Delta V_{CE}} = \dfrac{(24-26)mA}{(2-8)V} = \underline{0.333\ mA/V}$

11-33

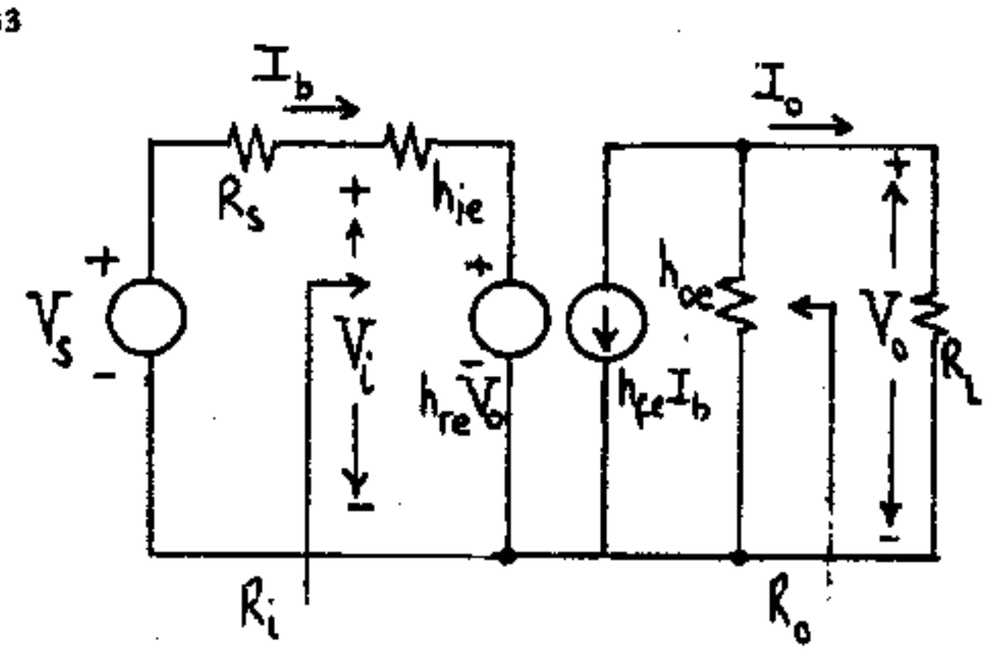

(a) Using KCL at the output node C:

$I_o = -h_{fe}I_b - h_{oe}V_o = -h_{fe}I_b - h_{oe}R_L I_o$

or

$A_I = \dfrac{I_o}{I_b} = -\dfrac{h_{fe}}{1 + h_{oe}R_L}$

(b) Using KVL at the input loop we have:

$V_i = h_{ie}I_b + h_{re}V_o = h_{ie}I_b + h_{re}I_oR_L$

$V_i = h_{ie}I_b + h_{re}A_IR_LI_b$ thus

$R_i = \dfrac{V_i}{I_b} = h_{ie} + h_{re}A_IR_L$

(c) $A_V = \dfrac{V_o}{V_i} = \dfrac{I_oR_L}{V_i} = \dfrac{A_II_bR_L}{V_i} = \dfrac{A_IR_L}{R_i}$

(d) If a voltage V is placed between C and E with $V_s = 0$ and $R_L = \infty$ and the current drawn from V is I then

$R_o = \dfrac{V}{I} = \dfrac{1}{Y_o}$ Hence

$I = Vh_{oe} + h_{fe}I_b$ and

$h_{re}V + (R_s + h_{ie})I_b = 0$

thus

$$I = Vh_{oe} - \frac{h_{fe}h_{re}}{R_s+h_{ie}}V, \text{ and } Y_o = \frac{I}{V} = h_{oe} - \frac{h_{fe}h_{re}}{R_s+h_{ie}}$$

11-34

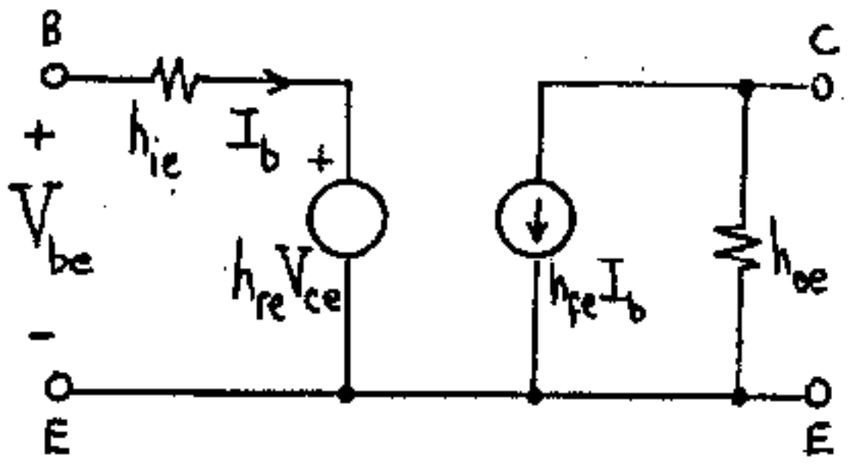

(a) From KVL in the base-emitter circuit,

$$V_{be} = h_{ie}I_b + h_{re}V_{ce}. \quad \text{Also, } V_{ce} = \frac{-h_{fe}I_b}{h_{oe}}.$$

$$\therefore V_{be} = \frac{-h_{ie}h_{oe}V_{ce}}{h_{fe}} + h_{re}V_{ce}.$$

$$A_V = \frac{V_{ce}}{V_{be}} = \frac{h_{fe}}{h_{fe}h_{re}-h_{ie}h_{oe}} = \frac{-h_{fe}}{h_{ie}h_{oe}} \times \frac{1}{1-\frac{h_{fe}h_{re}}{h_{ie}h_{oe}}}$$

$$= \frac{-h_{fe}}{h_{ie}h_{oe}} \times \frac{1}{\gamma}$$

(b) $R_i = \frac{V_{be}}{I_b} = \frac{h_{ie}I_b + h_{re}V_{ce}}{I_b} = h_{ie} - \frac{h_{re}h_{fe}}{h_{oe}}$

$$= h_{ie}\left(1-\frac{h_{re}h_{fe}}{h_{oe}h_{ie}}\right) = h_{ie}\gamma$$

(c) $\gamma = 1 - \frac{h_{re}h_{fe}}{h_{ie}h_{oe}} = 1 - \frac{10^{-4}\times 100}{2.1\times10^3\times10^{-5}} = 0.5238$

$$A_V = \frac{-100}{2.1\times10^3\times10^{-5}} \times \frac{1}{0.5238} = \underline{-9091}$$

$$R_i = 2.1\times10^3\times0.5238 = \underline{1.10\ k\Omega}$$

11-35

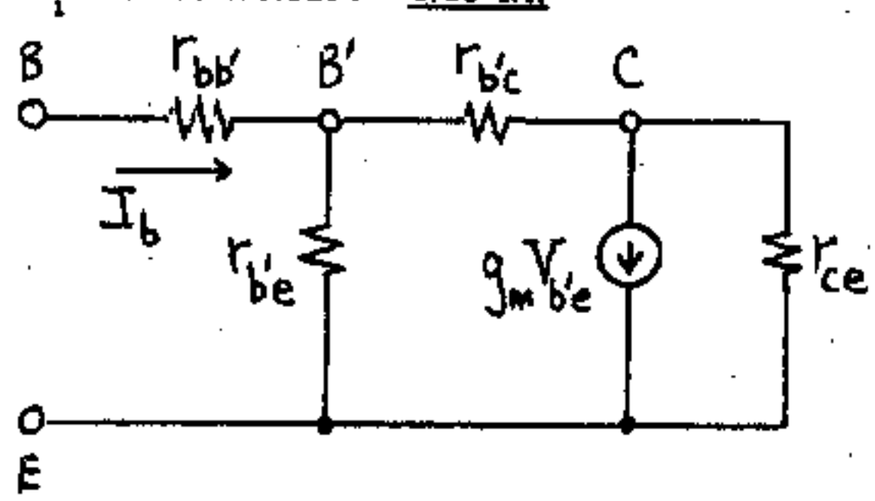

(a) The node equation at C is,

$$g_mV_{b'e} - \frac{V_{b'e}}{r_{ce}} + V_{ce}\left(\frac{1}{r_{b'c}} + \frac{1}{r_{ce}}\right) = 0 \qquad (1)$$

The node equation at B' is,

$$\frac{-V_{be}}{r_{bb'}} - \frac{V_{ce}}{r_{b'c}} + V_{b'e}\left(\frac{1}{r_{bb'}} + \frac{1}{r_{b'e}} + \frac{1}{r_{b'c}}\right) = 0 \qquad (2)$$

Using the inequalities given, (1) becomes,

$$g_mV_{b'e} + \frac{V_{ce}}{r_{ce}} = 0 \quad \text{or,} \quad V_{b'e} = \frac{-V_{ce}}{g_mr_{ce}} \qquad (3)$$

Equation (2) becomes,

$$\frac{-V_{be}}{r_{bb'}} + \frac{V_{b'e}}{r_{bb'}} - \frac{V_{ce}}{r_{b'c}} = 0 \qquad (4).$$ Substituting

(3) into (4) gives,

$$\frac{-V_{be}}{r_{bb'}} = \frac{V_{ce}}{g_mr_{ce}r_{bb'}} - \frac{V_{ce}}{r_{b'c}} = 0, \text{ or,}$$

$$\frac{-V_{be}}{r_{bb'}} = V_{ce}\left(\frac{1}{g_mr_{ce}r_{bb'}} + \frac{1}{r_{b'c}}\right).$$

$$A_V = \frac{V_{ce}}{V_{be}} = \frac{-1}{\frac{1}{g_mr_{ce}} + \frac{r_{bb'}}{r_{b'c}}} = \frac{-g_mr_{ce}}{1+\frac{g_mr_{ce}r_{bb'}}{r_{b'c}}} \approx -g_mr_{ce}$$

(b) $R_i = \frac{V_{be}}{I_b}$.

$$I_b = \frac{V_{b'e}}{r_{b'e}} + \frac{V_{b'e}}{r_{b'c}} - \frac{V_{ce}}{r_{b'c}} \approx \frac{V_{b'e}}{r_{b'e}} - \frac{V_{ce}}{r_{b'c}}$$ using

the given inequalities. From (3),

$$I_b = \frac{-V_{ce}}{g_mr_{ce}r_{b'e}} - \frac{V_{ce}}{r_{b'c}} = -A_VV_{be}\left(\frac{1}{g_mr_{ce}r_{b'e}} + \frac{1}{r_{b'c}}\right)$$

$$R_i = \frac{V_{be}}{I_b} = \frac{1}{\frac{g_mr_{ce}}{g_mr_{ce}r_{b'e}} + \frac{g_mr_{ce}}{r_{b'c}}} = \frac{r_{b'e}}{1+\frac{g_mr_{ce}r_{b'e}}{r_{b'c}}}$$

(c) $A_V = -50\times10^{-3}\times200\times10^3 = \underline{-10{,}000}$

(Note, more exactly, $A_V = \frac{-g_mr_{ce}}{1+\frac{g_mr_{ce}r_{bb'}}{r_{b'c}}}$

$$= \frac{-50\times10^{-3}\times200\times10^3}{1+\frac{50\times10^{-3}\times200\times10^3\times100}{20\times10^6}} = \underline{-9524}$$

$$R_i = \frac{2\cdot10^3}{1+\frac{50\times10^{-3}\times200\times10^3\times2\times10^3}{20\times10^6}} = \underline{1\ k\Omega}.$$

11-36

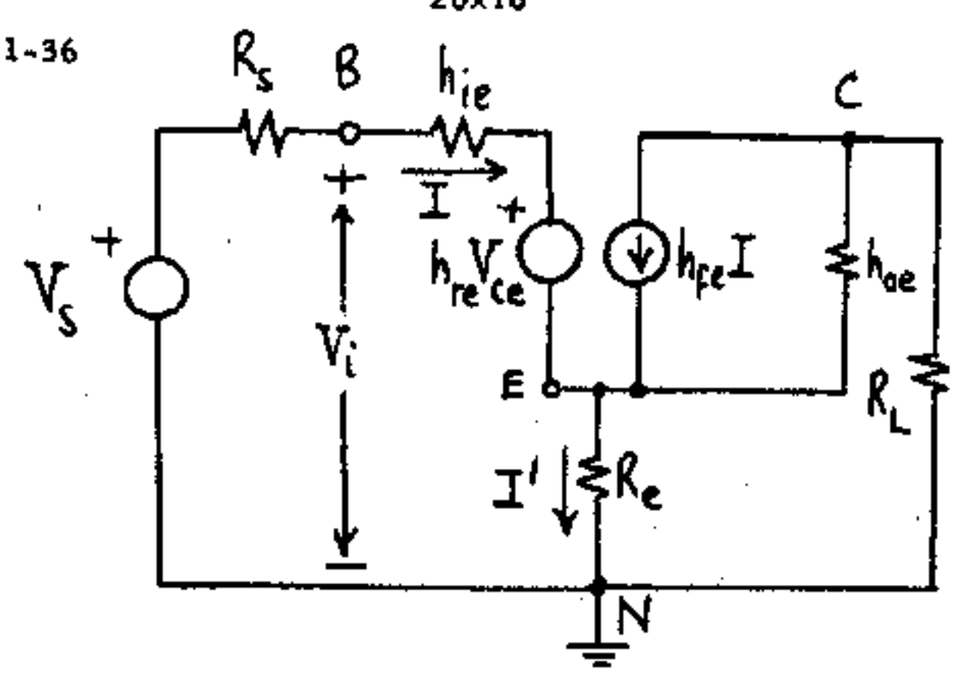

(a) $R_i = \frac{V_i}{I}$ where $V_i = Ih_{ie} + h_{re}V_{ce} + V_{en}$

$V_{en} = (I + h_{fe}I + V_{ce}h_{oe})R_e = I'R_e$

$V_{ce} = -V_{en} - R_L(h_{fe}I + V_{ce}h_{oe}) = -(I + h_{fe}I + V_{ce}h_{oe})R_e - R_L(h_{fe}I + V_{ce}h_{oe})$

or $V_{ce}(1 + h_{oe}R_e + h_{oe}R_L) = -I[(1+h_{fe})R_e + h_{fe}R_L]$

Thus, $V_i = I[h_{ie} + (1+h_{fe})R_e] + V_{ce}(h_{re} + h_{oe}R_e)$

or $V_i = I\left\{h_{ie} + (1+h_{fe})R_e - (h_{re} + h_{oe}R_e)\frac{[(1+h_{fe})R_e + h_{fe}R_L]}{1 + h_{oe}R_e + h_{oe}R_L}\right\}$

Hence, $R_i = h_{ie} + (1+h_{fe})R_e - (h_{re} + h_{oe}R_e)\frac{[(1+h_{fe})R_e + h_{fe}R_L]}{1 + h_{oe}(R_e + R_L)}$

(b) $R_i = 2.1\times10^3 + 101\times2\times10^3 - \frac{(10^{-4} + 2\times10^{-2})\times(101\times2\times10^3 + 100\times2\times10^3)}{1 + 10^{-5}(4\times10^3)}$

$= \underline{196.3\ k\Omega}$

11-37 From prob. 11-33, $R_i = h_{ie} + h_{re}R_LA_I$

$= h_{ie} - \frac{h_{re}R_Lh_{fe}}{1 + h_{oe}R_L} = h_{ie} - \frac{h_{re}h_{fe}}{\frac{1}{R_L} + h_{oe}}$

When $R_L = 0$, $R_i = h_{ie} = 2.1\ k\Omega$.

The value of R_L for which $R_i = 0.9\ h_{ie}$ is given by,

$0.9\ h_{ie} = h_{ie} - \frac{h_{re}h_{fe}}{\frac{1}{R_L} + h_{oe}}$

$0.9\times2.1\times10^3 = 2.1\times10^3 - \frac{10^{-4}\times100}{\frac{1}{R_L} + 10^{-5}}$

$R_L = \underline{26.58\ k\Omega}$

11-38

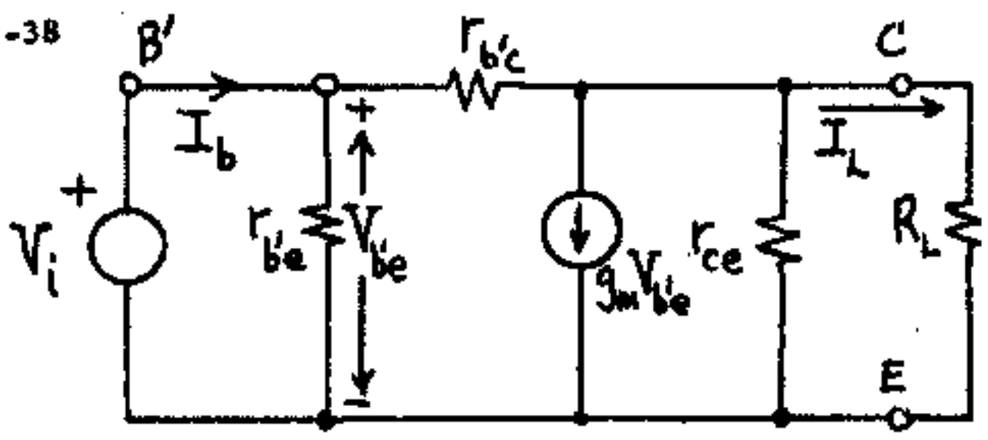

$K = \frac{V_{ce}}{V_{b'e}} = \frac{I_{sc}Z_{ce}}{V_{b'e}}$ where $Z_{ce} = R_L \| r_{ce} \| r_{b'c}$

$= \frac{1}{g_L + r_{ce} + g_{b'c}}$

and $I_{sc} = -g_mV_{b'e} + V_{b'e}g_{b'c} = V_{b'e}(g_{b'c} - g_m)$.

Thus, $K = \frac{g_{b'c} - g_m}{g_{b'c} + g_{ce} + g_L}$

11-39

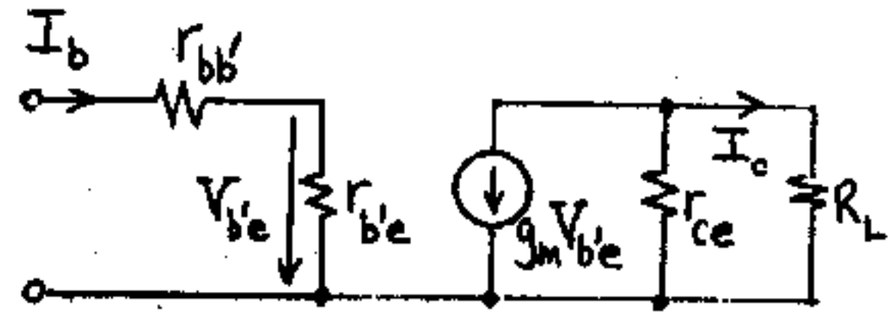

$I_o = \frac{r_{ce}}{r_{ce} + R_L}(-g_m V_{b'c}) = \frac{-r_{ce}g_m}{r_{ce} + R_L} \times I_b \times r_{b'e}$

$\therefore A_I = \frac{I_o}{I_b} = -\frac{(g_mr_{b'e})r_{ce}}{(r_{ce} + R_L)}$

From Eq. (11-67) $g_mr_{b'e} = h_{fe}$. Note that $g_mV_{b'e} = g_mr_{b'e}I_b = h_{fe}I_b$. Hence, the output circuit is identical with that of Fig. 11-17 if $r_{ce} = 1/h_{oe} = g_{ce}$. Hence

$A_I = -\frac{h_{fe}r_{ce}}{r_{ce} + R_L} = -\frac{h_{fe}}{1 + \frac{R_L}{r_{ce}}} = \frac{-h_{fe}}{1 + h_{oe}R_L}$

which is the same as in Prob. 11-33a.

11-40 From Eqs. (11-67),

$g_m = \frac{|I_c|}{V_T} = \frac{13\times10^{-3}}{26\times10^{-3}} = 0.5\ A/V = 500\ mA/V$

$r_{b'e} = \frac{h_{fe}}{g_m} = \frac{250}{500} = \underline{0.5\ k\Omega}$

$r_{bb'} = h_{ie} - r_{b'e} = 700 - 500 = \underline{200\ \Omega}$.

$r_{b'c} = \frac{r_{b'e}}{h_{re}} = \frac{500}{10^{-4}} = \underline{5\ M\Omega}$.

$g_{ce} = h_{oe} - (1+h_{fe})g_{b'c} = 10^{-4} - (251)\times2\times10^{-7} = 4.98\times10^{-5}\ \mho$.

or, $\frac{1}{g_{ce}} = r_{ce} = \underline{20.08\ k\Omega}$.

11-41 From Eq. (11-69),

$A_I = \frac{1+h_{fe}}{1+h_{oe}R_L} = \frac{101}{1+10^{-5}\times3\times10^3} = \underline{98.06}$.

From Eq. (11-70),

$R_i = h_{ie} + A_IR_L = 2 + 98.06\times3 = \underline{296.18\ k\Omega}$.

From Eq. (11-72),

$A_V = 1 - \frac{h_{ie}}{R_i} = 1 - \frac{2}{296.18} = \underline{0.993}$

$A_{Vs} = \frac{A_VR_i}{R_i + R_s} = \frac{0.993\times296.18}{296.18 + 1} = \underline{0.99}$

From Eq. (11-73), $G_o = h_{oe} + \frac{1+h_{fe}}{R_s + h_{ie}} = 10^{-5} + \frac{101}{10^3 + 2\times10^3}$

$= 3.37\times10^{-2}\ \mho$. $\therefore$ $\underline{R_o = 29.69\ \Omega}$.

11-42 (a) From Eq. (11-70),

$R_i = h_{ie} + \frac{1+h_{fe}}{1+h_{oe}R_L}\times R_L$

$$600 = 2+\frac{81\times R_L}{1+0.02\times R_L} \quad \text{or,} \quad \underline{R_L = 8.63\ k\Omega}$$

From Eq. (11-73), $G_o = 1/25 = h_{oe}+\frac{1+h_{fe}}{R_s+h_{ie}} =$

$20\times 10^{-6}+81/R_s+2\times 10^3$ or $\underline{R_s = 26.0\ \Omega}$

(b) From Eq. (11-69), $A_I = \frac{1+h_{fe}}{1+h_{oe}R_L} = \frac{81}{1+2\times10^{-5}\times8.63\times10^3}$

$= \underline{69.08}$

From Eq. (11-72), $A_V = 1-\frac{h_{ie}}{R_i} = 1-\frac{2}{600} = \underline{0.997}$

(c) $0.999 = 1-\frac{2}{R_i}$ or $\underline{R_i = 2\ M\Omega}$.

$$2\times10^3 = 2+\frac{81\ R_L}{1+2\times10^{-2}R_L}$$

$\underline{R_L = 48.68\ k\Omega}$

11-43

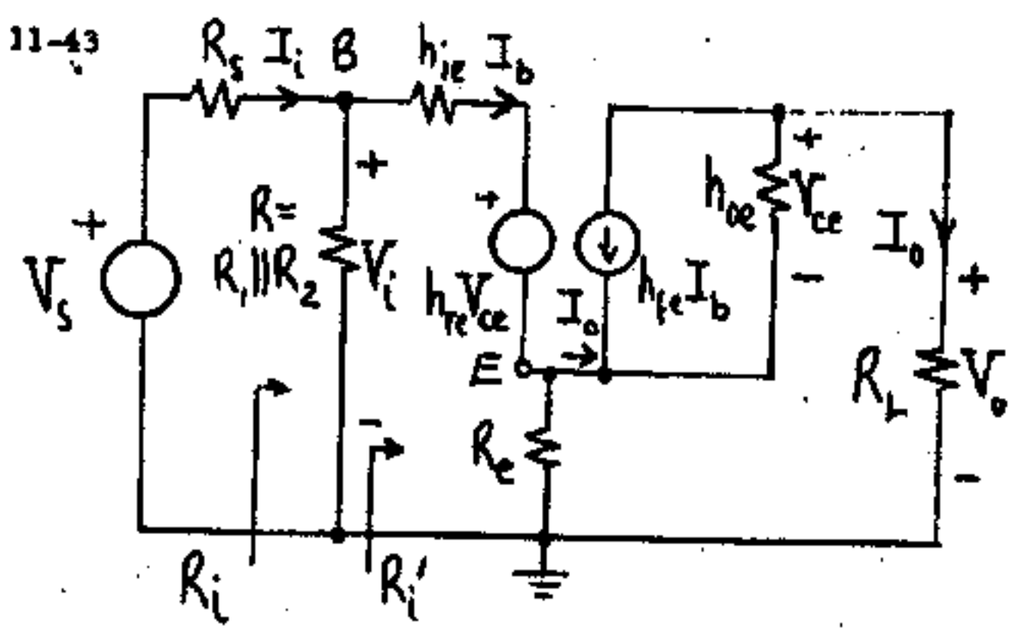

$$A_I = \frac{I_o}{I_i} = \frac{I_o}{I_b}\times\frac{I_b}{I_i}$$

$$-I_o = h_{fe}I_b + h_{oe}V_{ce} \qquad (1)$$

$$V_{ce} = V_o - R_e(I_b - I_o) \qquad (2)$$

$$V_o = I_oR_L \qquad (3)$$

Thus, $-I_o = h_{fe}I_b + h_{oe}[I_oR_L - R_e(I_b - I_o)]$

$$-I_o = 100I_b + 10^{-2}[4I_o - (I_b - I_o)]$$

$$I_o = -95.2\ I_b \qquad (4)$$

From the input circuit,

$$V_i = h_{ie}I_b + h_{re}V_{ce} - V_{ce} + R_LI_o$$

$$= h_{ie}I_b + (h_{re}-1)(R_LI_o - R_e(I_b - I_o)) + R_LI_o$$

$$= h_{ie}I_b + (h_{re}-1)(-R_L\times95.2I_b - R_e\ 96.2\ I_b) + R_L\times95.2\ I_b$$

$$= [h_{ie} + (1-h_{re})(95.2R_L + 96.2R_e) - 95.2R_L]I_b$$

$$= [2.1 + (1-0.0001)(95.2\times4 + 96.2\times1) - 95.2\times4]I_b$$

$$= 98.3\ I_b$$

Hence $R_i' = V_i/I_b = 98.3\ k\Omega$ and

$\frac{I_b}{I_i} = \frac{R}{R+R_i'} = \frac{9}{107.3} = 0.084$. Thus

$$A_I = \frac{I_o}{I_i} = \frac{I_o}{I_b}\frac{I_b}{I_i} = -95.2\times0.084 = \underline{-7.99}$$

$$R_i = R\|R_i' = 9\|98.3 = \underline{8.25\ k\Omega}$$

$$A_V = \frac{V_o}{V_i} = A_I\frac{R_L}{R_i} = -7.99\times\frac{4}{8.25} = \underline{-3.87}$$

$$A_{V_s} = A_V\frac{R_i}{R_i+R_s} = -3.87\times\frac{8.25}{10.25} = \underline{-3.11}$$

11-44

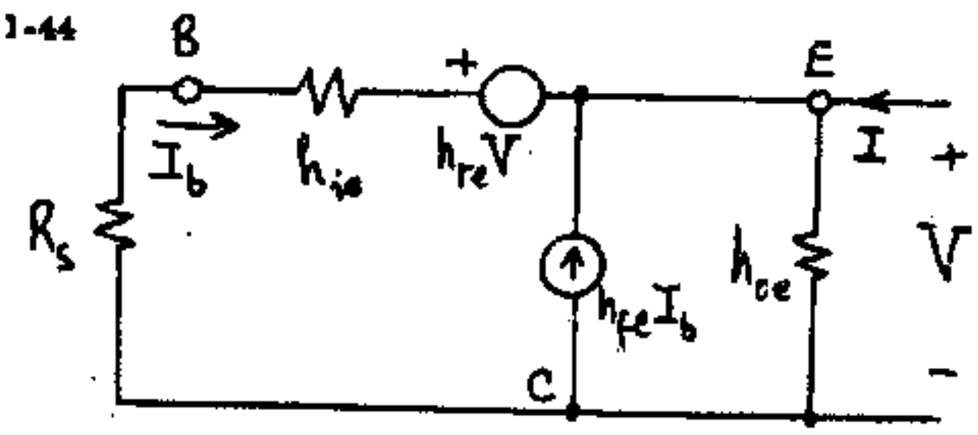

(a) To find G_o, set $V_s=0$, $R_L=\infty$ and apply a voltage V between E and C.

$$I = h_{oe}V - I_b(1+h_{fe}). \quad -I_b = \frac{V-h_{re}V}{R_s+h_{ie}} = \frac{V}{R_s+h_{ie}}$$

using the fact that $h_{re} \ll 1$.

By substitution,

$$I = V(h_{oe} + \frac{1+h_{fe}}{R_s+h_{ie}})$$

$$G_o = \frac{I}{V} = h_{oe} + \frac{1+h_{fe}}{R_s+h_{ie}}$$

(b) For the first stage,

$$G_{o1} = 10^{-5} + \frac{101}{5.1\times10^3} = 1.98\times10^{-2}\ \mho$$

$$R_{o1} = \frac{1}{G_{o1}} = \underline{50.5\ \Omega}$$

For the second stage,

$$G_{o2} = 10^{-5} + \frac{101}{50.5+2.1\times10^3} = 4.7\times10^{-2}\ \mho$$

$R_{o2} = \frac{1}{G_{o2}} = \underline{21.3\ \Omega}$ which is smaller than R_{o1}.

(c) $G_{o1} = 10^{-5} + \frac{101}{2.1\times10^3} = 4.81\times10^{-2}\ \mho$

$R_{o1} = \underline{20.79\ \Omega}$

$G_{o2} = 10^{-5} + \frac{101}{20.79+2.1\times10^3} = 4.76\times10^{-2}\ \mho$

$R_{o2} = \underline{20.99\ \Omega}$ which is slightly larger than R_{o1}.

11-45 (a) We have $h_{ie1} = (1+h_{fe})h_{ie2} = 101 \times 2.1 = 212.1\ k\Omega$

For the second stage, $h_{oe2}R_{e2} \leq 0.1$, thus

$A_{I2} = 1+h_{fe} = 101$

$R_{i2} = h_{ie2} + (1+h_{fe})R_e = 2.1 + 101 \times 5 = 507.1\ k\Omega$.

The effective load for Q1 is R_{i2}, thus $h_{oe}R_L$ is no longer ≤ 0.1.

From Eq. (11-69), $A_{I1} = \dfrac{1+h_{fe}}{1+h_{oe}R_{i2}} = \dfrac{101}{1+507.1\times10^{-2}}$

$= 16.64$

From Eq. (11-70),

$$R_i = R_{i1} = h_{ie1} + \frac{(1+h_{fe})R_{i2}}{1+h_{oe}R_{i2}} = 212.1 + \frac{101\times507.1\times10^3}{1+507.1\times10^{-2}}$$

$= \underline{8.65\ M\Omega}$

(b) $A_{V2} = 1 - \dfrac{h_{ie2}}{R_{i2}} = 1 - \dfrac{2.1}{507.1} = 0.996$

$A_{V1} = 1 - \dfrac{h_{ie1}}{R_{i1}} = 1 - \dfrac{101\times 2.1}{8650} = 0.975$

$A_V = A_{V1}A_{V2} = \underline{0.971}$

(c) For the first stage $G_{o1} = h_{oe} + \dfrac{1+h_{fe}}{R_s+h_{ie1}}$

$= 0.01 + \dfrac{101}{10+212.1} = 0.465\ mA/V$; $R_{o1} = 2.15\ k\Omega$.

For the second stage $R_{s2} = 2.15\ k\Omega$ and

$G_{o2} = h_{oe} + \dfrac{1+h_{fe}}{R_{s2}+h_{ie2}} = 0.01 + \dfrac{101}{2.15+2.1} = 23.77\ mA/V$

and $R_o = R_{o2} = 42.1\ \Omega$

(d) $G_{o1} = h_{oe} + \dfrac{1+h_{fe}}{h_{ie1}} = 0.01 + \dfrac{101}{212.1} = 0.486\ mA/V$

and $R_{o1} = R_{s2} = 2.06\ k\Omega$. Thus

$G_{o2} = h_{oe} + \dfrac{1+h_{fe}}{R_{s2}+h_{ie2}} = 0.01 + \dfrac{101}{2.06+2.1} = 24.3\ mA/V$

and $R_{o2} = 41.2\ \Omega$

(e) If only a single cc stage were present then with $R_s = 10\ k\Omega$ and $h_{ie} = 2.1\ k\Omega$

$G_{out} = 0.01 + \dfrac{101}{10+2.1} = 8.36\ mA/V$; $R_{out} = \dfrac{1000}{8.36}$

$= 120\ \Omega$

Note that $R_{o2} = 42.1\ \Omega$ in part (c) is less than $R_{out}(R_s > h_{ie})$.

For a single emitter follower with $R_s = 0$ and $h_{ie} = 2.1\ k\Omega$

$G_{out} = 0.01 + \dfrac{101}{2.1} = 48.1\ mA/V$;

$R_{out} = \dfrac{1000}{48.1} = 20.8\ \Omega$

Note that $R_{o2} = 41.2\ \Omega$ in part (d) is greater than $R_{out}(R_s < h_{ie})$.

11-46 (a) The output resistance of the first (CC) stage is given in Eq. (11-73). With the approximation $h_{oe} = 0$,

$R_{o1} = \dfrac{R_s+h_{ie1}}{h_{fe}}$ (1). The source resistance of the second stage is R_{o1}. Hence the overall output resistance is

$$R_o = \frac{R_{o1}+h_{ie2}}{1+h_{fe}} = \frac{\frac{R_s+h_{ie1}}{1+h_{fe}}+h_{ie2}}{1+h_{fe}} = \frac{R_s}{(1+h_{fe})^2} + \frac{2h_{ie2}}{1+h_{fe}}$$

since $h_{ie1} = (1+h_{fe})h_{ie2}$. Assume that $h_{fe} \gg 1$, so that $\dfrac{R_s}{1+h_{fe}} \ll 2\,h_{ie2}$. Then $R_o \approx \dfrac{2h_{ie2}}{1+h_{fe}}$.

(b) The output resistance of a single stage would be

$R_1 = (R_s+h_{ie2})/(1+h_{fe})$. To compare R_o with R_1 for various values of R_s, we form

$$\frac{R_o}{R_1} = \frac{2h_{ie2}}{R_s+h_{ie2}}.$$

Observe that: If $R_s < h_{ie2}$, then $R_o > R_1$

and if $R_s > h_{ie2}$, then $R_o < R_1$

11-47 If we neglect R_3 for the time being, the effective emitter resistance would be the parallel combination of R_e, R_1, and R_2. We next investigate the loading of R_3 on the effective emitter resistance by letting $A_V = V_o/V_i$. The current in R_3 is

$$\frac{(V_o-V_i)}{R_3} = \frac{(V_o-V_o/A_V)}{R_3} = \frac{(A_V-1)V_o}{R_3A_V} = \frac{V_o}{R'}$$

where $R' = A_VR_3/(A_V-1)$ is the effective resistance loading the emitter, in parallel with R_e, R_1, and R_2.

Since $A_V < 1$ but $A_V \approx 1$, R' is a large negative resistance. Hence, if we let $R = R_e\|R_1\|R_2$, the effective emitter resistance is $R'_e = R\|R'$, or

$R'_e = \dfrac{RR'}{R+R'}$. Since $|R'| > R$, both the numerator and the denominator are negative and $R'_e > 0$, Q.E.D.

11-48 (a) The contribution of R_3 on the emitter resistance is $R'_3 = A_VR_3/(A_V-1)$. The effective emitter resistance $= R_e\|R_1\|R_2\|R'_3 = R'_e$.

Assuming initially that $A_V \approx 1$, $R'_3 \approx \infty$ and

$R'_e = R_e\|R_1\|R_2 = 2\|20\|20 = 1.67\ k\Omega$. From Eq. (11-70), $R_i = V_i/I_b = h_{ie} + (1+h_{fe})R'_e = 2+101\times1.67$ or, $\underline{R_i = 171\ k\Omega}$

(b) $A_V = 1 - h_{ie}/R_i$, using Eq. (11-72). Thus, $A_V = 1-2/171 = \underline{0.988}$.

We can now refine our answers with this better approximation for A_V: $R'_3 = A_VR_3/(A_V-1) = -0.988\times10/0.012 = -823\ k\Omega$ and $R'_e = R'_3\|R_1\|R_2\|R_e =$

$R_3' \| 1.67 = 1.67$ kΩ as before.

(c) The effective resistance due to the biasing arrangement is $R_{eff} = R_3/(1-A_V) = 10/(1-0.988) =$ 833 kΩ and $R_i' = 833 \| 171 = \underline{142\ k\Omega}$

(d) $A_I = \frac{I_o}{I_b} \times \frac{I_b}{I_i} = A_I' \times \frac{R_{eff}}{R_{eff}+R_i} = \frac{101 \times 833}{833+171} = \underline{83.8}$

(e) If C' is missing then $R_{eff} = R_3 + R_1 \| R_2 =$ 10+10=20 kΩ. $R_i' = R_{eff} \| R_i = 20 \| 171 = \underline{17.9\ k\Omega}$

Comparing with part (c) we note that the effect of the bootstrapping capacitor is to increase the input resistance from 17.9 kΩ to 142 kΩ.

11-49 (a) From Table(11-1), at temperatures of 25°C and 175°C,

$\Delta I_{CO} = 33,000 \times 10^{-9}$ A, $\Delta\beta = \beta_2 - \beta_1 = 100-55 = 45$, and

$\Delta V_{BE} = V_{BE2} - V_{BE1} = 0.225 - 0.6 = -0.375$ V.

From Eq. (11-17),

$$\frac{\Delta I_C}{I_{C1}} = \frac{\Delta I_{CO}}{I_{C1}} - \frac{\Delta V_{BE}}{I_{C1}R_e} + \frac{\Delta\beta}{\beta_1\beta_2}$$

$$0.1 = \frac{3.3\times10^{-5}}{2\times10^{-3}} + \frac{0.375}{2\times10^{-3}R_e} + \frac{45}{100\times55}$$

$R_e = 2.49$ kΩ

For a temperature decrease from 25°C to -65°C, $\Delta I_{CO} = -1\times10^{-9}$, $\Delta\beta = \beta_2 - \beta_1 = 25-55 = -30$, and

$\Delta V_{BE} = 0.78 - 0.6 = 0.18$

$$\frac{-\Delta I_C}{I_{C1}} = 0.1 = \frac{10^{-9}}{2\times10^{-3}} + \frac{0.18}{2\times10^{-3}R_e} + \frac{30}{25\times55}$$

$R_e = 1.15$ kΩ. This value of R_e would cause more than a 10% increase in I_C for T varying from 25°C to 175°C.

$\therefore\ \underline{R_{e_{min}} = 2.49\ k\Omega}$

(b) Since the quiescent (average value) of the input sinusoid is zero,

$V_{EE} = V_{BE} + I_C R_e = 0.7 + 2\times2.49 = \underline{5.68\ V}$

11-50 (a) From Eq. (11-80),

$$I_D = I_{DSS}(1 - \frac{V_{GS}}{V_P})^2.$$

Thus, $V_{GS} = -I_D R_s = -I_{DSS} R_s (1 - \frac{V_{GS}}{V_P})^2$

$$V_{GS} = -2.5\times 0.5(1 + \frac{V_{GS}}{2.2})^2$$

Solving the quadratic gives, $V_{GS} = \underline{-0.63\ V}$

(b) $I_D = \frac{-V_{GS}}{R_s} = \frac{0.63}{0.5} = \underline{126\ mA.}$

(c) $V_{DS} = V_{DD} - I_D(R_d + R_s) = 25 - 1.26(10+0.5) = \underline{11.77\ V.}$

11-51 (a) The slope of the bais line gives R_s.

$$R_s = \frac{4-1}{0.8-0.4} = \frac{3}{0.4} = \underline{7.5\ k\Omega}$$

(b) From the first point, we find

$V_{GG} = V_{GS} + R_s I_D = -1 + 7.5\times0.4 = 2$ V

or alternatively from the second point, we have

$V_{GG} = -4 + 7.5\times0.8 = 2$ V.

$$V_{GG} = 2 = \frac{R_2 V_{DD}}{R_1+R_2} = \frac{R_2\times20}{R_1+R_2}, \quad \text{or,} \quad \frac{R_2}{R_1+R_2} = 0.10.$$

Thus $\frac{R_1+R_2}{R_2} = 10$ or $R_1/R_2 = 9$

$$R_G = 500 = \frac{R_1R_2}{R_1+R_2} = R_1(\frac{R_2}{R_1+R_2}) = R_1\times0.1.$$

Thus $R_1 = 5000$ kΩ $= \underline{5\ M\Omega}$

and $R_2 = R_1/9 = \underline{555.6\ k\Omega}$

11-52

$$V_{GG} = \frac{R_2}{R_1+R_2}\times V_{DD} = \frac{300\times65}{1800} = 10.83\ V$$

Using KVL in the G-S loop gives

$$V_{GS} = -5I_D + V_{GG} \quad \text{or} \quad I_D = \frac{V_{GS}-10.83}{-5}$$

From Eq. (11-80),

$$I_D = I_{DSS}(1 - \frac{V_{GS}}{V_P})^2 = \frac{V_{GS}-10.83}{-5} = 3(1+\frac{V_{GS}}{3})^2$$

Solving the quadratic gives,

$V_{GS} = \underline{-0.404\ V}$ $\qquad I_D = \underline{2.25\ mA}$

$V_{DS} = V_{DD} - (R_d + R_s)I_D = 65 - 25\times2.25 = \underline{8.75\ V}$

11-53 (a) $I_D = I_{DSS}(1 - \frac{V_{GS}}{V_P})^2$ (1)

From KVL around the gate-source loop,

$v_i = V_{GS} + 12I_D - 10 = 0.$ (2)

From (1) and (2) with $v_i = 0$,

$$I_D = 5(1+\frac{V_{GS}}{4.5})^2 = \frac{10-V_{GS}}{12}$$

Solving the quadratic gives $V_{GS} = -2.45$ V. Thus

$I_D = \frac{10+2.45}{12} = 1.04$ mA.

$v_o = I_D\times12 - 10 = \underline{2.45\ V}$. (or $v_o = -V_{GS} + v_i = 2.45$ V)

(b) $v_i = 12$ V; From (2)

$12 = V_{GS} + 12\ I_D - 10$ or $I_D = \frac{22-V_{GS}}{12}$

Substituting into (1) gives,

$\frac{22-V_{GS}}{12} = 5(1+\frac{V_{GS}}{4.5})^2$. Solving the quadratic gives,

$V_{GS} = -1.67$ V. $\qquad I_D = \frac{22+1.67}{12} = 1.97$ mA

$v_o = I_D\times12 - 10 = \underline{13.64\ V}$

(c) $v_o=0$. Thus, $I_D=\frac{10}{12}=0.83$ mA.

From (1), $0.83=5(1+\frac{V_{GS}}{4.5})^2$ or, $V_{GS}=v_1=-2.67$ V.

11-54 From the circuit, $V_{GS}=\frac{1}{2}V_{DS}=\frac{1}{2}(V_{DD}-10I_D)=\frac{1}{2}(30-10I_D)$. Substituting into the given expression, $I_D=0.2(15-5I_D-3)^2$. Solving the quadratic gives the two values $I_{D1}=3.2$ mA or $I_{D2}=1.8$ mA.
For $I_{D1}=3.2$ mA, $V_{GS1}=15-5I_{D1}=-1$ V.
For $I_{D2}=1.8$ mA, $V_{GS2}=15-5I_{D2}=+6$ V.
Thus, $V_{DS1}=-2$ V and $V_{DS2}=+12$ V.
Hence $I_D=$ 1.8 mA, $V_{GS}=$ 6 V, and $V_{DS}=$ 12 V.

11-55 From the circuit, $V_{GS}=-0.5\,I_D$. Substituting into the given equation, $I_D=16(1-\frac{0.5I_D}{4})^2$.
Solving the quadratic gives, $I_D=16$ mA or 4 mA
$V_{DS}=30-I_D(5+0.5)$. Note; V_{DS} is negative for $I_D=16$ mA.
Thus, $I_D=4$ mA, $V_{DS}=30-4(5.5)=8$ V,
$V_{GS}=-0.5\,I_D=-2$ V.
$g_m=\frac{\partial I_D}{\partial V_{GS}}$ from Eq. (11-81). Taking the derivative gives, $g_m=\frac{32}{4}(1+\frac{V_{GS}}{4})=8(1-\frac{2}{4})=4$ mA/V.

11-56 (a) From Eqs. (11-81), (11-82),

$$g_m=g_{mo}(1-\frac{V_{GS}}{V_P})=\frac{-2I_{DSS}}{V_P}(1-\frac{V_{GS}}{V_P})$$

Using Eq. (11-80)

$$1-\frac{V_{GS}}{V_P}=\sqrt{\frac{I_{DS}}{I_{DSS}}}.\quad \text{Thus,}$$

$$g_m=\frac{-2I_{DSS}}{V_P}\sqrt{\frac{I_{DS}}{I_{DSS}}}=\frac{2}{|V_P|}\times\sqrt{I_{DS}I_{DSS}}$$

(b) $g_m=\frac{2}{3}\sqrt{3\times10^{-3}\times I_{DS}\times10^{-3}}=1.15\times10^{-3}\sqrt{I_{DS}}$

g_m	0	1.15	2.3	3.45	4.6
I_{DS}	0	1	4	9	16

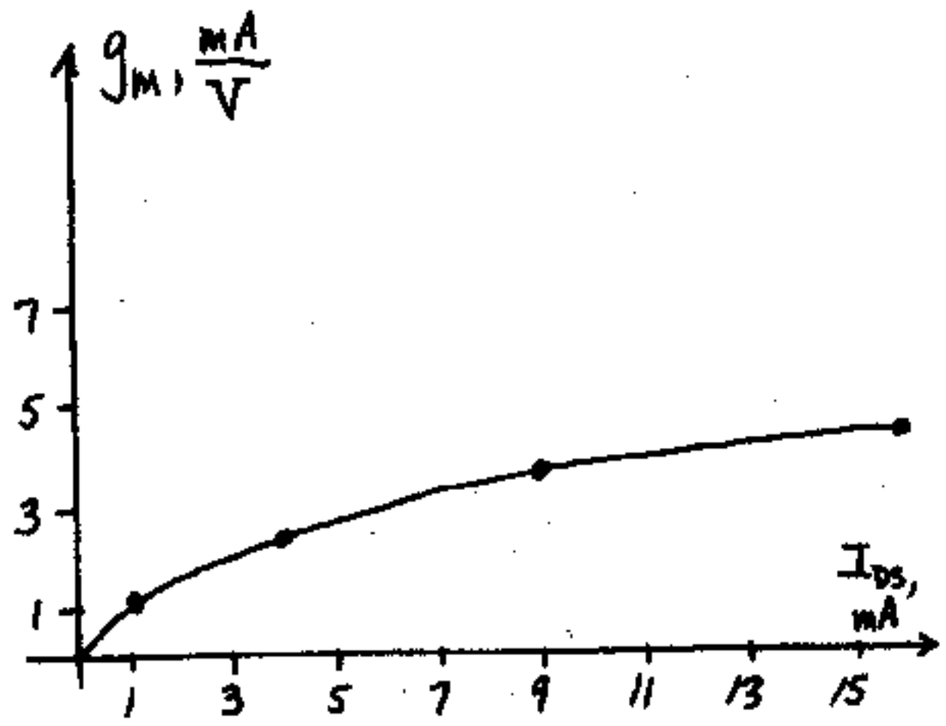

(c) From Eq. (11-80),

$$I_D=I_{DSS}(1-\frac{V_{GS}}{V_P})^2=I_{DSS}(1-\frac{2V_{GS}}{V_P}+\frac{V_{GS}^2}{V_P^2})$$

$$\approx I_{DSS}(1-\frac{2V_{GS}}{V_P})\quad \text{since}\quad V_{GS}\ll V_P.$$

Thus, from Eq. (11-82),

$$I_D\approx I_{DSS}-(\frac{2I_{DSS}}{V_P})V_{GS}=I_{DSS}+g_{mo}V_{GS}.$$

11-57 (a) Using Eq. (11-75) we have $i_d=g_m v_{gs}+\frac{1}{r_d}v_{ds}$.
For $i_d=0$ it becomes $-g_m r_d=\left.\frac{v_{ds}}{v_{gs}}\right|_{i_d=0}$ and from Eq. (11-78) $-g_m r_d=-\mu$.

(b) If two FETS are in parallel then the current change is the sum of current increments in the two FETs. Hence, using Eq. (11-76) we have:

$$g_m=\left.\frac{\Delta I_{DS\ total}}{\Delta V_{GS}}\right|_{\Delta V_{DS}=0}=\left.\frac{i_{ds\ total}}{v_{gs}}\right|_{v_{ds}=0}=\left.\frac{i_{ds1}}{v_{gs}}\right|_{v_{ds}=0}$$

$$+\left.\frac{i_{ds2}}{v_{gs}}\right|_{v_{ds}=0}=g_{m1}+g_{m2}.\quad \text{Similarly}$$

$$g_d=\left.\frac{\Delta I_{DS\ total}}{\Delta V_{DS}}\right|_{\Delta V_{GS}=0}=\left.\frac{i_{ds\ total}}{v_{ds}}\right|_{v_{gs}=0}=\left.\frac{i_{ds1}}{v_{ds}}\right|_{v_{gs}=0}$$

$$+\left.\frac{i_{ds2}}{v_{ds}}\right|_{v_{gs}=0}=g_{d1}+g_{d2}\quad \text{or}\quad \frac{1}{r_d}=\frac{1}{r_{d1}}+\frac{1}{r_{d2}}$$

From Eq. (11-79) $\mu=g_m r_d=(g_{m1}+g_{m2})\frac{r_{d1}r_{d2}}{r_{d1}+r_{d2}}$

$$=\frac{\mu_1 r_{d2}+\mu_2 r_{d1}}{r_{d2}+r_{d1}}$$

11-58 (a) Using Fig. (11-30b), $g_o=\frac{\mu+1}{r_d+R_d}=\frac{\mu+1}{r_d}$ for $R_d=0$.
If $\mu\gg1$, $g_o=\frac{\mu}{r_d}=g_m$ from Eq. (11-79).

(b) From Eq. (11-80),
$I_{DS}=I_{DSS}(1-\frac{V_{GS}}{V_P})^2$. If $V_{GS}=V_{DS}$,
$I_{DS}=I_{DSS}(1-\frac{V_{DS}}{V_P})^2$.

$g_o=\frac{dI_{DS}}{dV_{DS}}=\frac{-2I_{DSS}}{V_P}(1-\frac{V_{DS}}{V_P})$, which is the expression for g_m given in Eqs. (11-81, 11-82) for $V_{GS}=V_{DS}$.

11-59 The equivalent circuit is

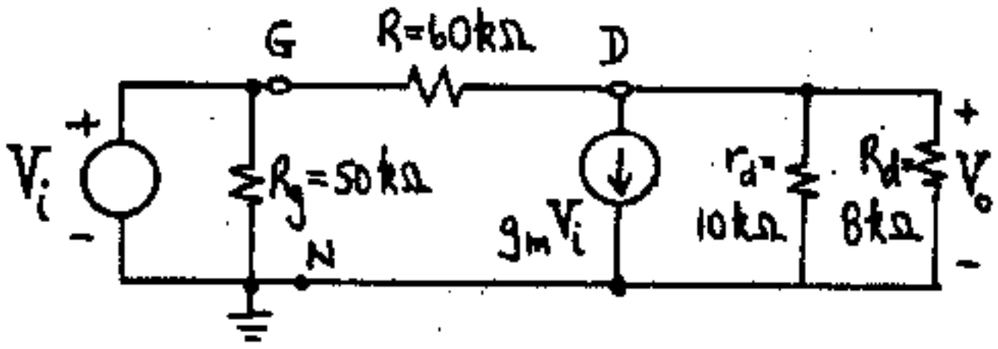

Taking the Thevenin equivalent to the left of GN and substituting r_d and R_d by their parallel combination $R_L = 8 \times 10/18 = 4.44\ k\Omega$, we have

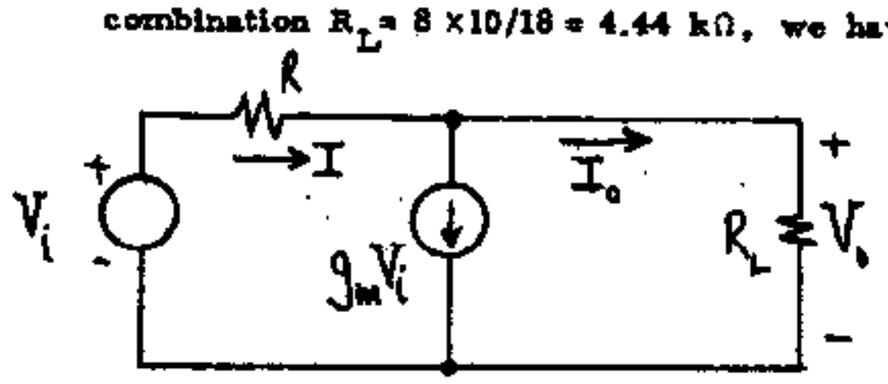

From KCL, $(V_i - V_o)/R = g_m V_i + V_o/R_L$.

We have $g_m = \mu/r_d = 40/10 = 4$ mA/V. Letting $G = 1/R = 0.0167$ mA/V and $G_L = 1/R_L = 0.225$ mA/V, we get $G(V_i - V_o) = g_m V_i + G_L V_o$ or

$(G - g_m)V_i = (G_L + G)V_o$ and $A_V = \frac{V_o}{V_i} = \frac{G - g_m}{G + G_L}$

$= \frac{0.0167 - 4}{0.0167 + 0.225} = \underline{-16.62}$

11-60 The equivalent circuit is

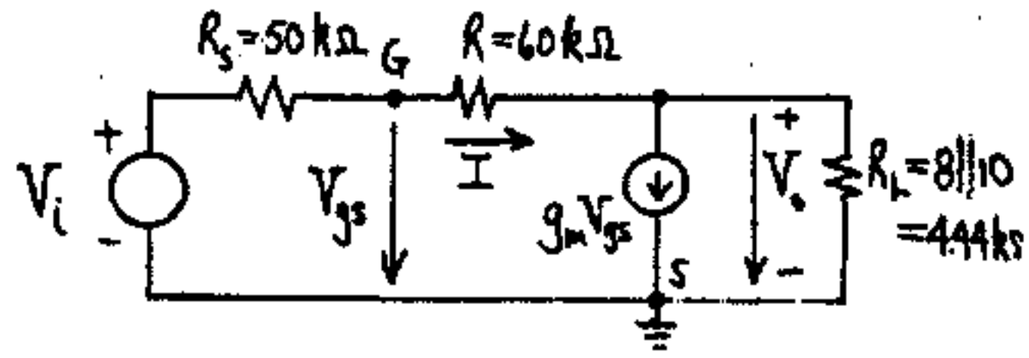

$I = (V_i - V_o)/(R_s + R) = 0.0091(V_i - V_o)$ (1)

$V_{gs} = V_i - R_s I = V_i - 0.455(V_i - V_o) = 0.545\ V_i + 0.455\ V_o$

KCL at node D gives $I = g_m V_{gs} + G_L V_o$ (3)

where $g_m = 4$ mA/V and $G_L = 1/R_L = 0.225$ mA/V.

Substituting the values of I and V_{gs} from (1) and (2), respectively, in (3) gives

$0.0091(V_i - V_o) = 4(0.545 V_i + 0.455\ V_o) + 0.225\ V_o$ or

$(0.0091 - 2.18)V_i = (0.0091 + 1.82 + 0.225)V_o$ and

$A_V = \frac{V_o}{V_i} = \frac{-2.17}{2.05} = \underline{-1.06}$

11-61 (a)

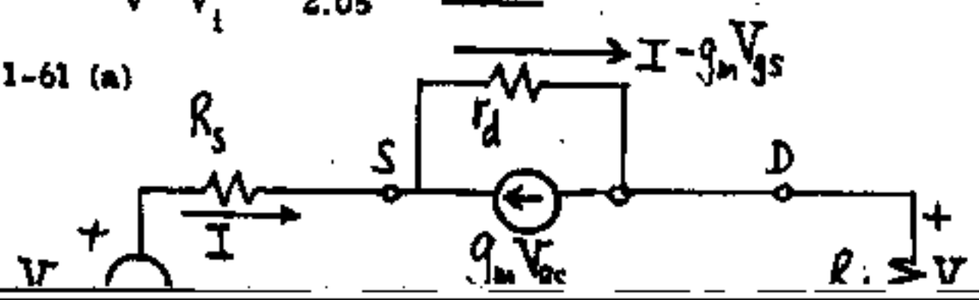

From Fig. 11-27 the equivalent small signal model is as shown.

Then

$V_{gs} = -V_s + IR_s$ (1)

Applying KVL around the loop we have

$V_s + \mu V_{gs} = I(R_s + r_d + R_d)$ where $\mu = g_m r_d$ from Eq. (11-79) or substituting V_{gs} from (1) we have:

$V_s(\mu + 1) = I[r_d + R_d + (\mu + 1)R_s]$ or

$\frac{I}{V_s} = \frac{(\mu + 1)}{r_d + R_d + (\mu + 1)R_s}$ (2) but $V_o = I R_d$ hence

$A_V = \frac{V_o}{V_s} = \frac{(\mu + 1)R_d}{r_d + R_d + (\mu + 1)R_s}$

(b) $R_i = \frac{V_s}{I} = R_s + \frac{r_d + R_d}{\mu + 1}$ where (2) has been used.

(c) To find R_o we set $V_s = 0$, we disconnect R_d and we apply a voltage V between D and ground or G. Then there exists a current through the circuit given by the equation:

$V + \mu V_{gs} = (r_d + R_s)I$ but $V_{gs} = -IR_s$ or

$V - \mu R_s I = (r_d + R_s)I$ or $R_o = \frac{V}{I} = r_d + (\mu + 1)R_s$

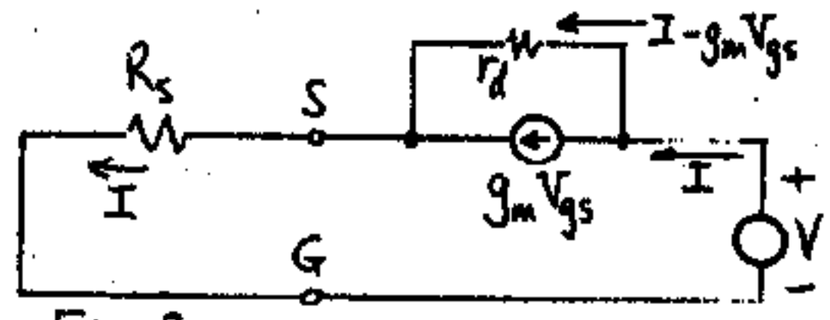

Fig 2

11-62 (a) $V_{GS} = V_i$. $R_d' = r_d \| 60 \| 60 = 15 \| 30 = 10\ k\Omega$.

From Eq. (11-87), $A_V = -g_m R_d' = -1 \times 10 = \underline{-10}$.

(b) From Fig. (11-30a), looking into the drain:

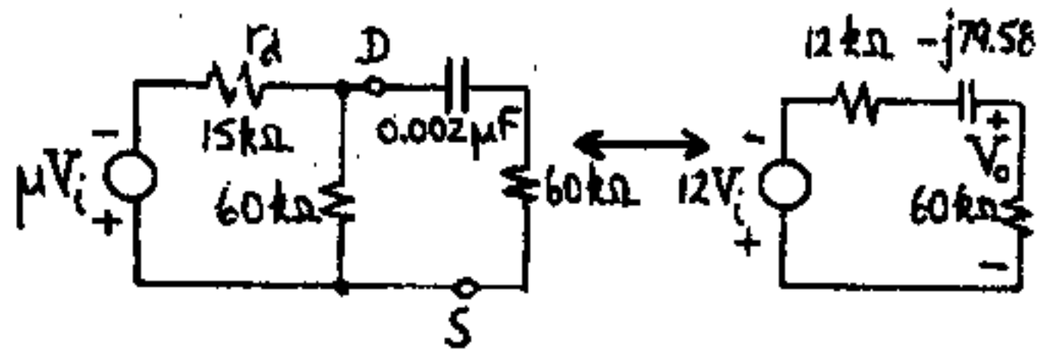

Finding the Thevenin's equivalent to the left of D-S gives, $R_{Th} = 15 \| 60 = 12\ k\Omega$

$V_{Th} = \frac{60}{60 + 15} \times \mu V_i = \frac{60}{75} \times g_m r_d V_i = \frac{60}{75} \times 1 \times 15 \times V_i$

$= -12\ V_i$

The impedance due to the capacitor $= \frac{1}{j\omega C}$

$= -j/2\pi 1000 \times 2 \times 10^{-9}\ \Omega = -79.58\ j\ k\Omega$

Thus, $A_V = \frac{V_o}{V_i} = \frac{-12 \times 60}{60 + 12 - 79.58\ j} = \frac{-720}{72 - 79.58\ j}$

11-63 (a) The equivalent circuit of this amplifier is given in Fig. 11-30 with a voltage source in series with R_d and $v_s = 0$.

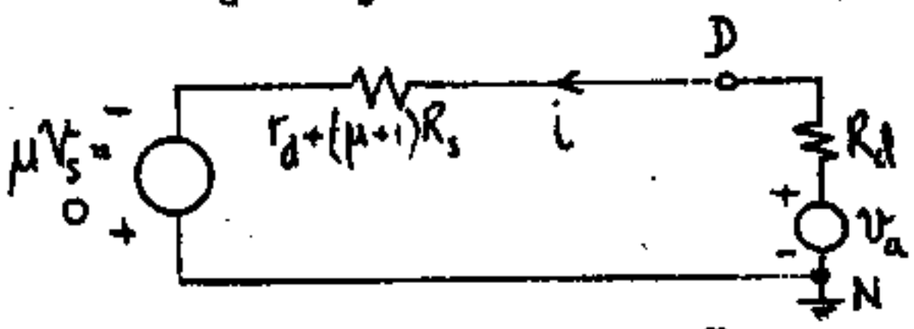

KVL around the loop gives $i = \dfrac{v_a}{R_d+r_d+(\mu+1)R_s}$

Notice $v_{dn} = i[r_d+(\mu+1)R_s]$ or $v_{dn} = \dfrac{r_d+(\mu+1)R_s}{r_d+R_d+(\mu+1)R_s}(v_a)$

(b) Also $v_{sn} = iR_s$ hence $v_{sn} = \dfrac{R_s}{r_d+R_d+(\mu+1)R_s} v_a$

(c) The equivalent circuit is given in Fig. 11-30(b) with a source v_b in series with R_s and $v_1=0$. Hence,

$i = \dfrac{(\mu+1)v_b}{r_d+R_d+(\mu+1)R_s}$ then $v_{dn} = R_d \times i$ or

$v_{dn} = \dfrac{(\mu+1)R_d}{r_d+R_d+(\mu+1)R_s} v_b$. Similarly, $v_{sn} = \dfrac{R_d+r_d}{\mu+1} i =$

$\dfrac{(r_d+R_d)}{r_d+R_d+(\mu+1)R_s} v_b$

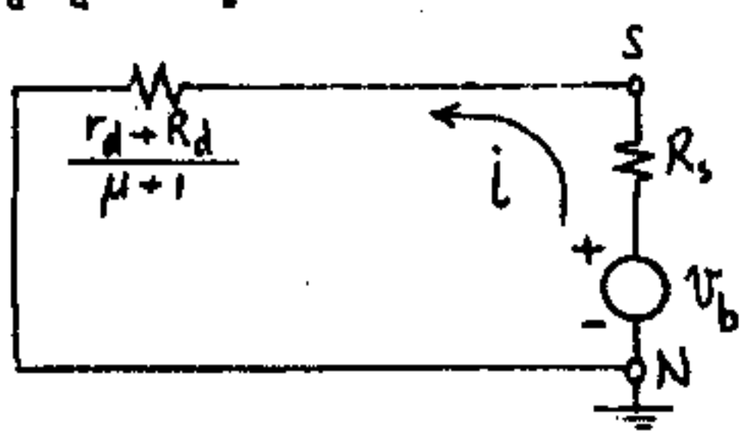

11-64 Using small signal equivalent circuit of Fig. 11-30 (b) for FET Q2 and 11-30(a) for Q1 we have figure as shown below.

Applying KVL around the loop we obtain:

$\dfrac{\mu V_2}{\mu+1} + \mu V_1 = I[r_d + \dfrac{r_d+R_L}{\mu+1}]$. Solving for I we obtain

$I = \dfrac{\mu}{(\mu+2)r_d+R_L} V_2 + \dfrac{\mu(\mu+1)}{(\mu+2)r_d+R_L} V_1$

but $V_L = -IR_L$ or $V_L = \dfrac{-\mu R_L}{(\mu+2)r_d+R_L}[V_2+(\mu+1)V_1]$

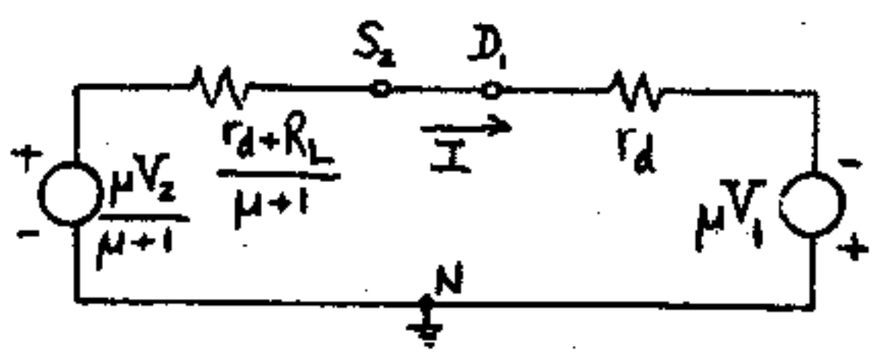

11-65 From Fig. (11-30), we redraw the circuit.

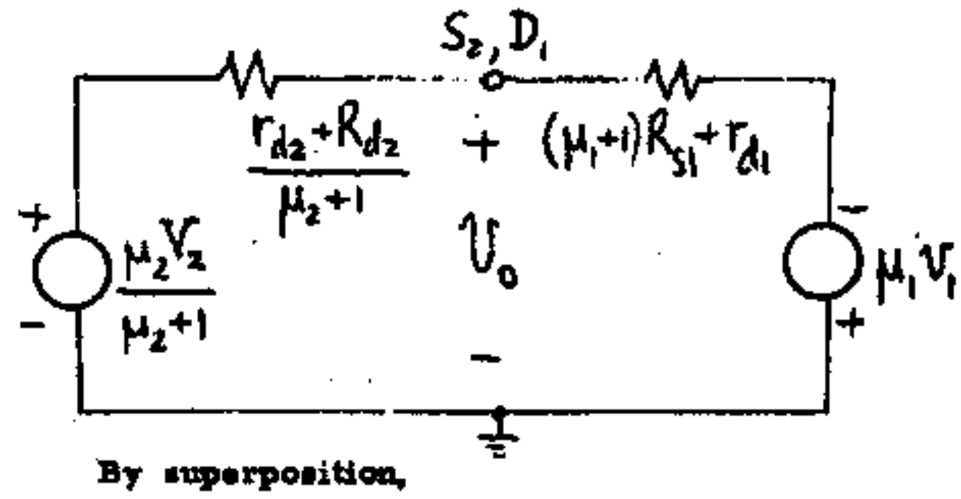

By superposition,

$$v_o = \frac{\frac{r_{d2}+R_{d2}}{\mu_2+1} \times (-\mu_1 v_1) + [(\mu_1+1)R_{s1}+r_{d1}] \times \frac{\mu_2 v_2}{\mu_2+1}}{\frac{r_{d2}+R_{d2}}{\mu_2+1} + (\mu_1+1)R_{s1} + r_{d1}}$$

(a) $v_2=0$. $\dfrac{v_o}{v_1} = \dfrac{-(15+1)\times 3\times 10}{2\times 15+1} \Big/ \dfrac{15+1}{2\times 15+1} + 0.5\times(10\times 3+1)+10$

$= \dfrac{-15.48}{26.02} = \underline{-0.595 = A_V}$

(b) $v_1=0$. $\dfrac{v_o}{v_2} = \dfrac{[(10\times 3+1)0.5+10]\times \frac{2\times 15}{2\times 15+1}}{26.02}$

$= \underline{0.948 = A_V}$

11-66 (a) Between D_2 and ground (D_1) the equivalent circuit of Fig. 11-30a is valid. Between D_1 and S_1 the model of Fig. 11-27 is used. Replacing the current source $g_m V_{gs1}$ in parallel with r_d by its Thevenin's equivalent (a voltage source $g_m r_d V_{gs1} = \mu V_{gs1}$ in series with r_d) we obtain the one mesh circuit shown. (This Thevenin's model is also obtained from Fig. 11-30a with $R_s=0$.) KVL around the loop gives:

$\mu V_{gs1} + \mu V_s = I[2r_d+(\mu+1)R_2+R_1]$. Since $V_{gs1} = -IR_1$

$-IR_1 + \mu V_s = I[2r_d+(\mu+1)R_2+R_1]$ or

$I = \dfrac{+\mu}{2r_d+(\mu+1)(R_1+R_2)} V_s$ and $V_o = -I(r_d+R_1)+\mu V_{gs1}$ or

$V_o = -I[r_d+(\mu+1)R_1]$. Hence

$A_V = \dfrac{V_o}{V_s} = \dfrac{-\mu[r_d+(\mu+1)R_1]}{2r_d+(\mu+1)(R_1+R_2)}$

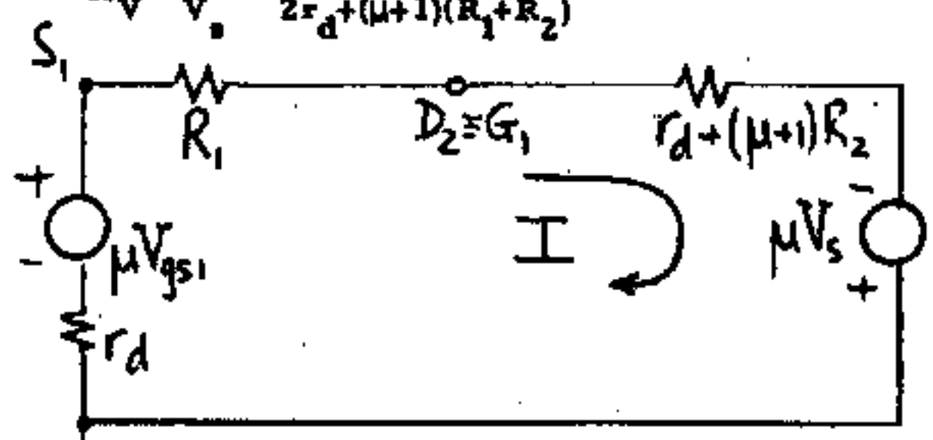

(b) To find R_o, set $V_s=0$, impress a voltage V at the output D_2 and find the current I drawn from V. Then $R_o = V/I$.

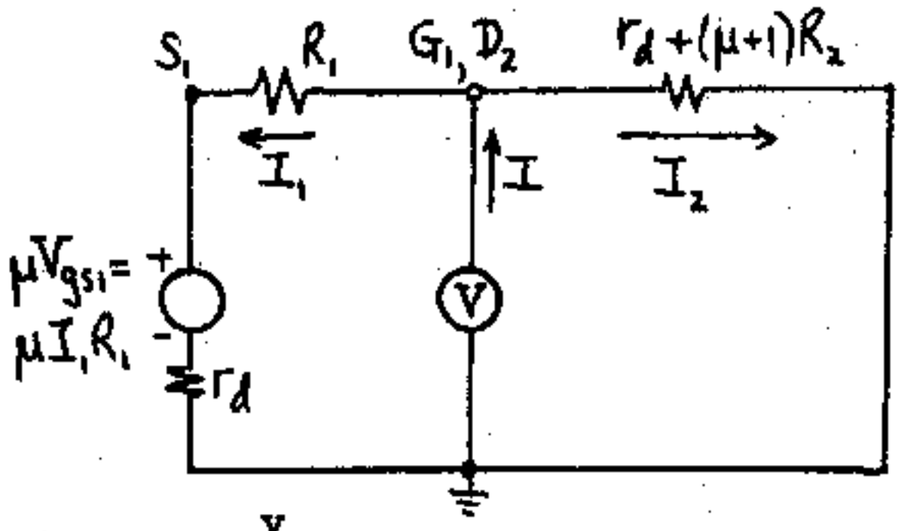

$$I_2 = \frac{V}{r_d+(\mu+1)R_2}$$

$$I_1 = \frac{V}{r_d+(\mu+1)R_1}$$

$$G_o = \frac{I_1+I_2}{V} = \frac{1}{r_d+(\mu+1)R_1} + \frac{1}{r_d+(\mu+1)R_2}$$

An alternative solution is to calculate R_o as the ratio of the open-circuit voltage V_o to the short-circuit current I' where V_o is the voltage found in part (a) and I' is obtained from the following circuit.

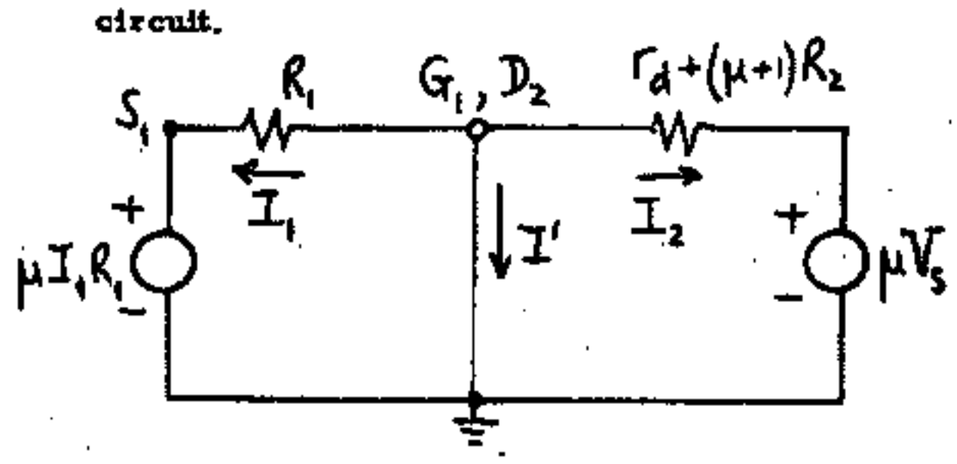

From KVL around the I_1 mesh we see that $I_1=0$

$$\therefore\ I' = -I_2 = \frac{-\mu V_s}{r_d+(\mu+1)R_2}$$

$$G_o = \frac{I'}{V_o} = \left[\frac{-\mu V_s}{r_d+(\mu+1)R_2}\right]\left[\frac{1}{-\mu V_s}\right]\left[\frac{2r_d+(\mu+1)(R_1+R_2)}{r_d+(\mu+1)R_1}\right]$$

$$= \frac{[r_d+(\mu+1)R_1]+[r_d+(\mu+1)R_2]}{[r_d+(\mu+1)R_2][r_d+(\mu+1)]} = \frac{1}{r_d+(\mu+1)R_1} + \frac{1}{r_d+(\mu+1)R_2}$$

(c) From part (a), if $R_1 = R_2 = R$

$$A_V = \frac{-\mu[r_d+(\mu+1)R]}{2r_d+2(\mu+1)R} = -\frac{\mu}{2}$$

and $G_o = \dfrac{2}{r_d+(\mu+1)R}$ or $R_o = \frac{1}{2}[r_d+(\mu+1)R]$

11-67 (a) Looking into the sources of both Q1 and Q2 we obtain,

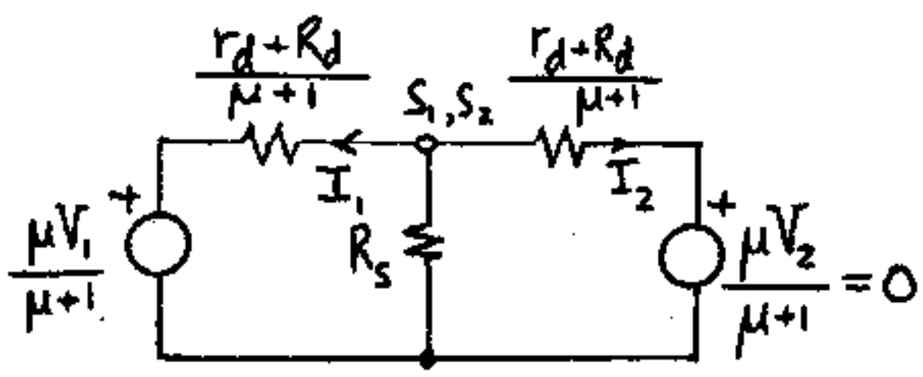

Since R_s is very large, $-I_1 = I_2$.

$$\frac{\mu V_1}{\mu+1} = I_2 2\left(\frac{r_d+R_d}{\mu+1}\right) \quad \text{or,} \quad I_2 = \frac{\mu V_1}{2(r_d+R_d)}$$

Since $V_{o2} = +I_2 R_d$ and $V_{o1} = +I_1 R_d$ and $-I_1 = I_2$ then $V_{o2} = -V_{o1}$.

(b)

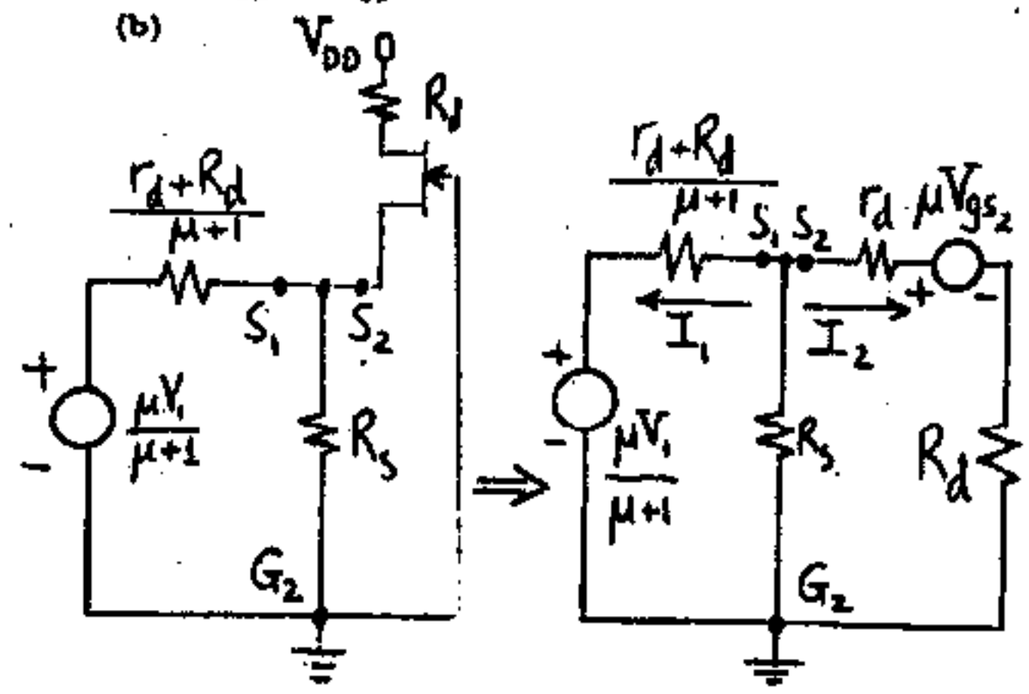

Since $R_s = \infty$, $I_1 = -I_2$. We note that $V_{gs2} = \frac{-\mu}{\mu+1}V_1 + \frac{r_d+R_d}{\mu+1}I_2$. Applying KVL around the loop we have $I_2\left[\frac{r_d+R_d}{\mu+1} + r_d + R_d\right] = \frac{\mu}{\mu+1}V_1 + \frac{\mu^2}{\mu+1}V_1 - \frac{\mu}{\mu+1}(r_d+R_d)I_2$ or $I_2 2(r_d+R_d) = \mu V_1$ hence $I_2 = \dfrac{\mu V_1}{2(r_d+R_d)}$

11-68 Looking into source 1, we get;

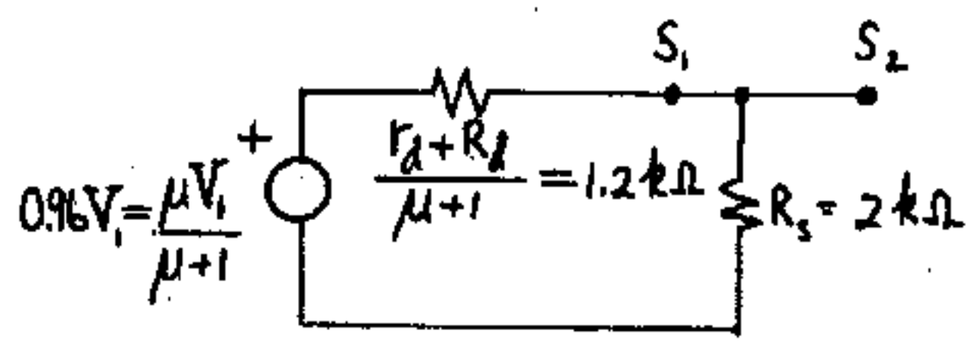

The Thevenin equivalent of the above is, with

$$V_{th} = \frac{0.96\,V_1 \times 2}{3.2} = 0.60\,V_1$$

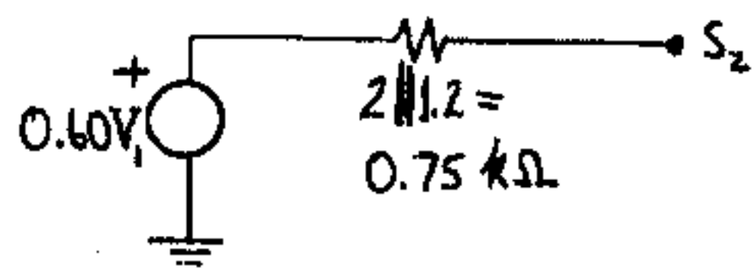

Looking into D_2 gives,

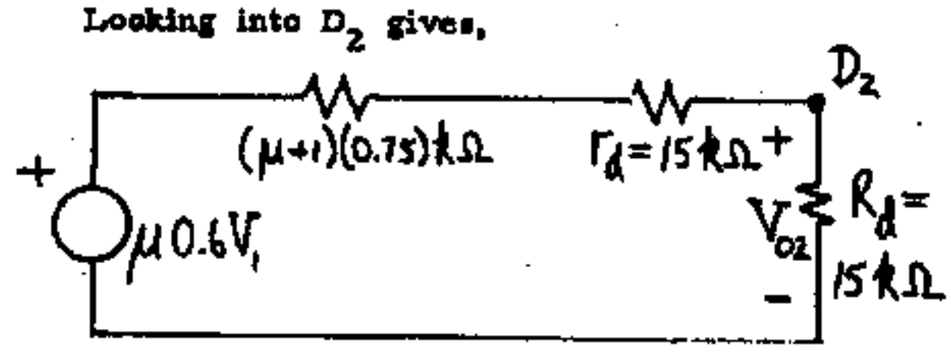

(a) $A_V = \frac{V_{o2}}{V_1} = \frac{R_d \times \mu \times 0.6}{R_d + r_d + 0.75\times(\mu+1)} = \frac{15\times 24\times 0.6}{15+15+0.75\times 25}$

$= \underline{4.44}$

(b) $R_o = R_d \| [r_d + (\mu+1)(0.75)] = 15 \| 33.75 = \underline{10.38\ k\Omega}$

11-69 (a) Using Fig. (11-30), looking into the sources of the two FETs,

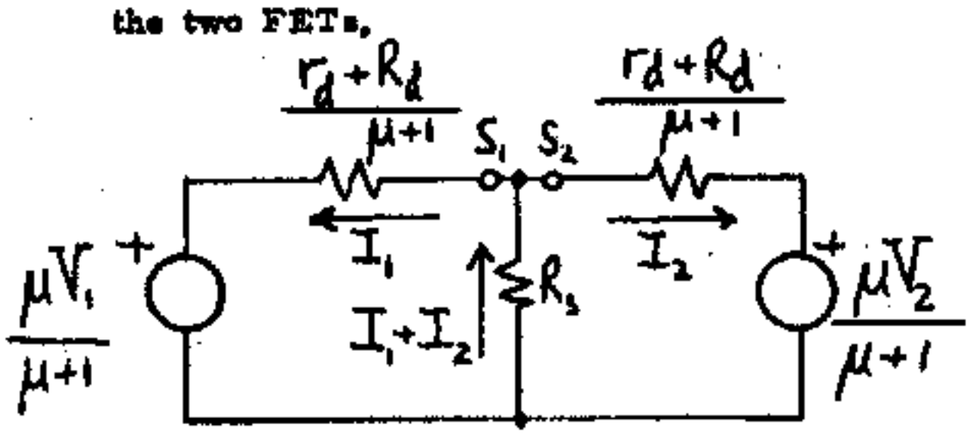

From KVL in loop 1,

$$\frac{-\mu V_1}{\mu+1} = I_1\left(\frac{r_d+R_d}{\mu+1}+R_s\right) + I_2 R_s .$$

From KVL in loop 2,

$$\frac{-\mu V_2}{\mu+1} = I_2\left(\frac{r_d+R_d}{\mu+1}+R_s\right) + I_1 R_s$$

Solving for I_2 gives

$$I_2 = \frac{-\frac{\mu}{\mu+1}\left(\frac{r_d+R_d}{\mu+1}+R_s\right)V_2}{\left(\frac{r_d+R_d}{\mu+1}\right)\left(\frac{r_d+R_d}{\mu+1}+2R_s\right)} + \frac{\frac{R_s\mu}{\mu+1}\times V_1}{\left(\frac{r_d+R_d}{\mu+1}\right)\left(\frac{r_d+R_d}{\mu+1}+2R_s\right)}$$

$V_{o2} = R_d I_2$, thus,

$$A_2 = \frac{-\mu[r_d+R_d+(\mu+1)R_s]R_d}{(r_d+R_d)[r_d+R_d+2(\mu+1)R_s]}$$

$$A_1 = \frac{R_s\mu R_d(\mu+1)}{(r_d+R_d)[r_d+R_d+2(\mu+1)R_s}$$

(b) If $R_s \to \infty$, then $A_2 = \frac{-(\mu)(\mu+1)R_s R_d}{(r_d+R_d)(2)(\mu+1)R_s} = \frac{-\mu R_d}{2(r_d+R_d)}$

and $A_1 = \frac{R_s\mu R_d(\mu+1)}{(r_d+R_d)(2)(\mu+1)R_s} = \frac{\mu R_d}{2(r_d+R_s)} = -A_2$

11-70

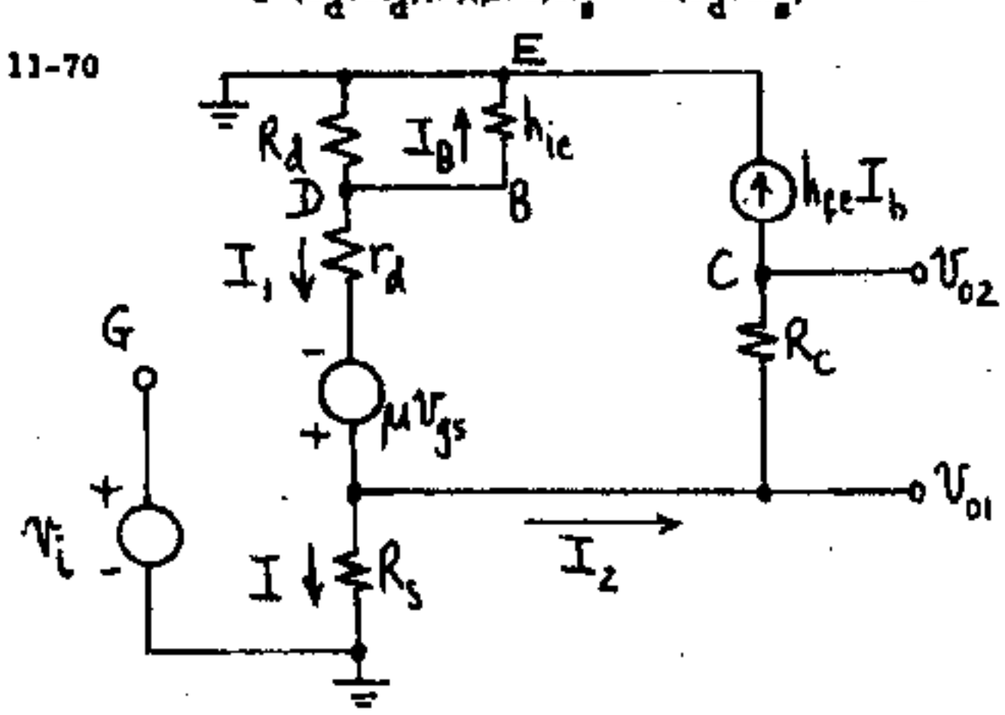

The small-signal equivalent circuit is as shown. From the circuit, $v_{gs} = v_i - IR_s$ where $I = I_1 - I_2$ $= I_1 - h_{fe}I_B$. Since $h_{ie} << R_d$, then $I_B \approx I_1$, thus $I = (1+h_{fe})I_1$. KVL in the FET loop gives:

$[h_{ie}+r_d+R_s(1+h_{fe})]I_1 = \mu v_{gs} = \mu v_i = \mu(1+h_{fe})R_s I_1$ or

$$I_1 = \frac{+\mu v_i}{h_{ie}+r_d+(\mu+1)(1+h_{fe})R_s} \approx \frac{\mu v_i}{r_d+\mu h_{fe}R_s} = \frac{g_m v_i}{1+g_m h_{fe}R_s}$$

since $r_d >> h_{ie}$, $h_{fe} >> 1$, $\mu >> 1$ and $\mu = g_m r_d$.

Then $v_{o1} = IR_s = (1+h_{fe})R_s I_1 \approx h_{fe}R_s I_1$

$\therefore A_{V1} = \frac{v_{o1}}{v_i} \approx \frac{g_m h_{fe}R_s}{1+g_m h_{fe}R_s}$ and

$v_{o2} = v_{o1} - h_{fe}I_B R_c \approx (h_{fe}R_s + h_{fe}R_c)I_1 = h_{fe}(R_s+R_c)I_1$.

Hence, $A_{V2} = \frac{v_{o2}}{v_i} \approx \frac{g_m h_{fe}(R_s+R_c)}{1+g_m h_{fe}R_s}$

11-71 (a) From Eq. (11-80),

$0.8 = 1.65(1+\frac{V_{GS}}{2})^2$. Thus, $\underline{V_{GS} = -0.61\ V}$.

(b) From Eq. (11-82),

$g_{mo} = \frac{-2I_{DSS}}{V_P} = \frac{-2\times 1.65}{-2} = 1.65\ mA/V$.

From Eq. (11-81),

$g_m = g_{mo}(1-\frac{V_{GS}}{V_P}) = 1.65(1+\frac{0.61}{-2}) = \underline{1.15\ mA/V}$

(c) $R_s = \frac{-V_{GS}}{I_D} = \frac{0.61}{0.8} = \underline{763\ \Omega}$

(d) 20 dB ≡ voltage gain of 10. From Eq. (11-87) assuming $r_d >> R_d$,

$|A_V| = g_m R_d$. Thus, $R_d \approx \frac{10}{1.15} = \underline{8.70\ k\Omega}$

CHAPTER 12

12-1

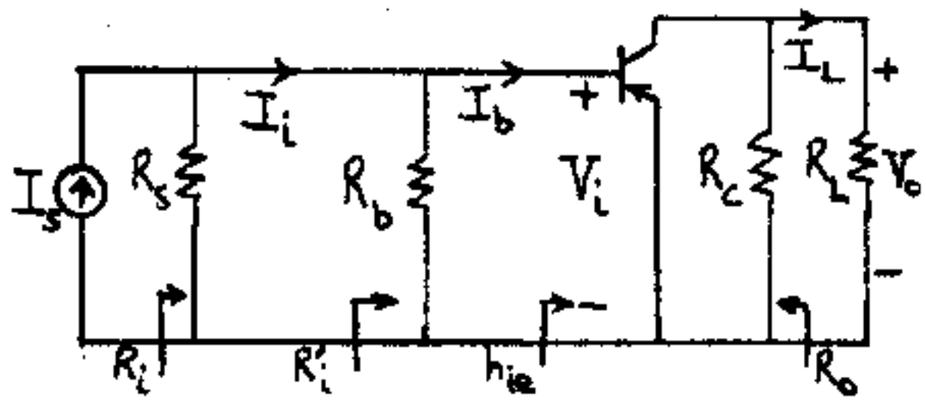

a) $I_L/I_s = \frac{I_L}{I_b} \times \frac{I_b}{I_i} \times \frac{I_i}{I_s}$ where $\frac{I_i}{I_s} = \frac{R_s}{R_s+R_i'}$ and

$R_i' \approx R_b \| h_{ie} = 30\|2.1 = 1.96\ k\Omega$. Thus, $\frac{I_i}{I_s}$

$= \frac{2}{2+1.96} = 0.505$. $\frac{I_b}{I_i} = \frac{R_b}{R_b+h_{ie}} = \frac{30}{30+2.1} = 0.935$.

$\frac{I_L}{I_b} = -h_{fe} \times \frac{R_c}{R_c+R_L} = \frac{-100\times 3}{3+3} = -50$. Thus,

$A_I = I_L/I_s = 0.505 \times 0.935 \times (-50) = \underline{-23.61}$

b) $\frac{V_o}{V_s} = \frac{R_L}{R_s} \times \frac{I_L}{I_s} = \frac{3}{2} \times (-23.61) = \underline{-35.42}$

c) $G_M = \frac{I_L}{V_s} = \frac{V_o}{R_L} \times \frac{1}{V_s} = -35.42/3 = \underline{-11.81\ mA/V}$

d) $R_M = V_o/I_s = \frac{R_s}{V_s} \times V_o = -35.42 \times 2 = \underline{-70.84\ k\Omega}$

e) $R_i = R_s \| R_b \| h_{ie} = 2\|30\|2.1 = 2\|1.96 = \underline{0.99\ k\Omega}$

f) $R_o \approx R_c = 3\ k\Omega$.

12-2 Obtaining the Norton equivalent of the source and replacing the FET by its model, we have

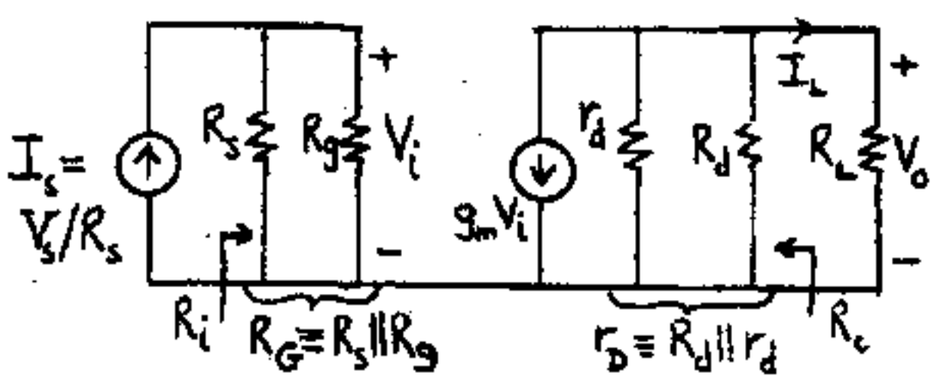

$r_D = R_d \| r_d = (15\times 80)/(15+80) = 12.63\ k\Omega$

$R_G = R_s \| R_g = (1000\times 0.5)/(1000+0.5) = 0.4998\ k\Omega$

a) $A_I = \frac{I_L}{I_s} = \frac{I_L}{V_i}\ \frac{V_i}{I_s} = (\frac{-g_m r_D}{r_D+R_L})(R_G) = \frac{-3\times 12.63}{12.63+5}$

$\times 0.4998 = \underline{-1.074}$

b) $\frac{V_o}{V_s} = \frac{R_L I_L}{R_s I_s} = \frac{R_L}{R_s} A_I = \frac{5}{0.5}(-1.074) = \underline{-10.74}$

c) $G_M = \frac{I_L}{V_s} = \frac{I_L}{I_s R_s} = \frac{A_I}{R_s} = \frac{-1.074}{0.5} = \underline{-2.148}\ mA/V$

d) $R_M = \frac{V_o}{I_s} = \frac{R_L I_L}{I_s} = R_L A_I = 5\times(-1.074) = \underline{-5.37}\ k\Omega$

e) The input resistance seen by the voltage source is $R_s + R_g \approx \underline{1\ M\Omega}$

f) $R_o = r_d \| R_d = \frac{80\times 15}{80+15} = \underline{12.63\ k\Omega}$

12-3 (a) Assume the β network can be represented by an ideal controlled voltage source of value $V_f = \beta V_o$. Thus, we have,

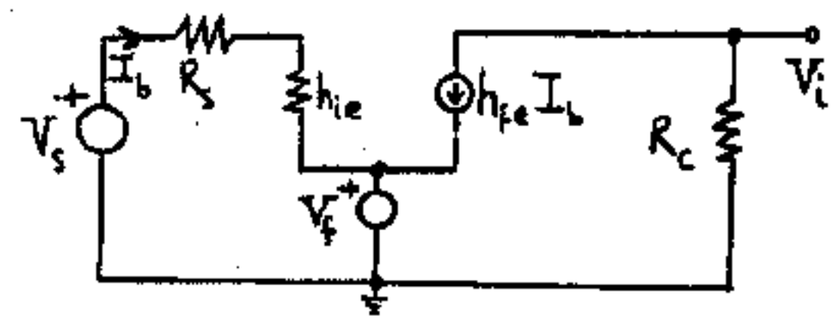

$V_i = -h_{fe} I_b R_c$ where $I_b = \frac{V_s - V_f}{R_s + h_{ie}}$

Thus, $V_i = \frac{-h_{fe} R_c (V_s - V_f)}{R_s + h_{ie}} = \frac{-200\times 3\times(V_s - V_f)}{1+2}$

$= \underline{-200(V_s - V_f)}$.

(b) $V_f = \beta V_o$ where $V_o = AV_i = -2000\times(-200)(V_s - \beta V_o)$.

Thus, $V_o = 4\times 10^5 (V_s - 6.67\times 10^{-3} V_o)$, or

$V_o = 149.9\ V_s$. Thus, $V_o/V_s = A_{V_f} = \underline{149.9}$

Note that $A_{V_f} \approx \frac{1}{\beta} = 150$

12-4 (a) $V_{i1} = V_i - \beta_1 V_o$. $V_{i2} = A_1(V_i - \beta_1 V_o) - \beta_2 V_o$

Thus, $V_o = V_{i2} A_2 = A_2 A_1 (V_i - \beta_1 V_o) - A_2 \beta_2 V_o$

or $V_o[1 + A_1 A_2 \beta_1 + A_2 \beta_2] = A_2 A_1 V_i$. Hence

$\frac{V_o}{V_i} = A_{V_f} = \frac{A_1 A_2}{1 + A_2\beta_2 + A_1 A_2 \beta_1}$

(b) The given 2-loop system can be reduced to the following one-loop feedback amplifier;

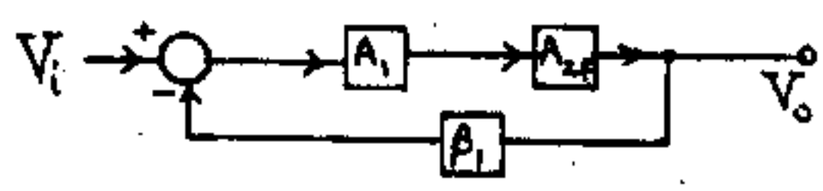

Thus, $V_o/V_i = A/(1+A\beta_1)$ where $A = A_1 A_{2f}$

and $A_{2f} = A_2/(1+A_2\beta_2)$.

12-5 From the diagram,

$V_{i1} = V_s + V_1 - \beta V_o$

$V_{i2} = V_2 + A_1 V_{i1} = V_2 + A_1(V_s + V_1 - \beta V_o)$

$V_o = V_3 + A_2 V_{i2} = V_3 + A_2 V_2 + A_2 A_1 (V_s + V_1 - \beta V_o)$

For $A = A_1 A_2$, $V_o(1+A\beta) = V_3 + A_2 V_2 + A(V_s + V_1)$.

Thus, $V_o = \frac{A[(V_s+V_1) + V_2/A_1 + V_3/A]}{1+\beta A}$

12-6 (a) The sensitivity S of A_f with respect to A is defined by

$S = \frac{dA_f/A_f}{dA/A} = \frac{dA_f}{dA} \cdot \frac{A}{A_f}$ or, by virtue of

Eq. (12-4), $S = \frac{(1+\beta A)-\beta A}{(1+\beta A)^2} \cdot \frac{A}{A/(1+\beta A)} = \frac{1}{1+\beta A}$,

Q.E.D.

(b) $A = A_1^3$ and $A_f = \frac{A}{1+\beta A} = \frac{A_1^3}{1+\beta A_1^3}$ (1)

We want $dA_f/A_f < |Y_f|$ (2)

From Eq. (1) above $\frac{dA_f/A_f}{dA_1/A_1} = \frac{dA_f}{dA_1} \cdot \frac{A_1}{A_f} =$

$$\frac{(1+\beta A_1^3)3A_1^2 - A_1^3\, 3\beta A_1^2}{(1+\beta A_1^3)^2} \quad \frac{A_1(1+\beta A_1^3)}{A_1^3} =$$

$$\frac{3}{A_1^3} \quad \frac{A_1^3}{1+\beta A_1^3} \quad \text{and finally } \frac{dA_f/A_f}{dA_1/A_1}$$

$$= \frac{dA_f/A_f}{Y_1} = \frac{3}{A} A_f, \quad \text{or}$$

$$|dA_f/A_f| = \frac{|Y_1|}{A} A_f < |Y_f| \text{ from Eq. (2).}$$

Thus $A > 3A_f\left|\frac{Y_1}{Y_f}\right|$, Q.E.D.

12-7 a) From Eq. (12-6), $\left|\frac{dA_f}{A_f}\right| = \frac{1}{|1+\beta A|}\left|\frac{dA}{A}\right|$. Thus,

$\frac{0.2}{100} = \frac{1}{1+\beta A} \times \frac{150}{2000}$. Hence, $1 + \beta A = 37.5$

$\beta = \frac{37.5-1}{2000} = \underline{0.0183}$

b) $A_f = A/1+\beta A = 2000/37.5 = \underline{53.33}$.

12-8 a) $A = 30/0.025 = 1200$. $A_f = A/1+\beta A$ where

$\beta = V_f/V_o = 1.5/100 = 0.015$. Thus,

$A_f = 1200/(1+0.015\times1200) = 63.16$. Hence

$V_o = V_s \times A_f = 0.025\times 63.16 = \underline{1.58\ V}$.

b) From Eq. (12-10), $B_{2f} = B_2/(1+\beta A)$ or

$1+\beta A = D = B_2/B_{2f} = 10/1$. Thus, $\beta A = 9$, and

$A_f = A/(1+\beta A) = 1200/(1+9) = 120$. Therefore

$V_s = V_o/A_f = 30/120 = \underline{0.25\ V}$

12-9 a) From Eq. (12-5) we have, $-45 = 20 \log\left|\frac{1}{1+\beta A}\right|$

or, $45 = 20 \log(1+\beta A)$, or $(1+\beta A) = \text{antilog}(45/20)$ $= 177.8$. However, $A_f = \frac{A}{1+\beta A} = \frac{1500}{177.8} = 8.44$.

At 15W, the output voltage is $V_o = AV_s = 1500\times12\times10^{-3} = 18$ V. For the power to remain at 15W, then V_o must also remain at 18 V. Thus, when feedback is applied, $V_s = V_o/A_f = 18/8.44 = \underline{2.133\ V}$

b) The distortion is reduced by the feedback factor, $1 + \beta A = 178$. Thus, $B_{2f} = B_2/(1+\beta A)$ $= 5\%/177.8 = \underline{0.028\%}$

12-10 (a) We know $R_{if} = \frac{V_s}{I_i}$. From KVL around input circuit we obtain $V_s = I_iR_i + V_f = I_iR_i + \beta I_o$ (1) (because of current-series feedback).

From the output circuit $I_o = \frac{R_o}{R_L+R_o} G_m V_i$ $= \frac{R_o}{R_L+R_o} G_m(I_iR_i)$. But $G_M = \frac{R_o G_m}{R_L+R_o}$

hence $I_o = G_M R_i I_i$ hence substituting I_o in (1) we have $V_s = I_iR_i(1+\beta G_M)$ or $R_{if} = R_i(1+\beta G_M)$

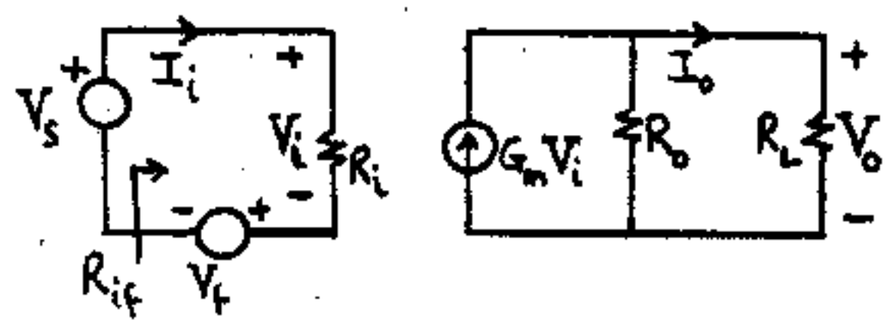

(b) Writing KCL at the input node V_i we have

$I_s = I_i + I_f$ but $I_f = \beta V_o$ and $V_o = \frac{R_L}{R_L+R_o} R_m I_i$.

We know that $\frac{R_L R_m}{R_L+R_o} = R_M$ hence $I_s = I_i + \beta R_M I_i$.

But $R_{if} = \frac{V_i}{I_s} = R_i = \frac{V_i}{I_i}$ hence

$$R_{if} = \frac{V_i}{I_s} = \frac{V_i}{I_i(1+\beta R_M)} = \frac{R_i}{(1+\beta R_M)}.$$

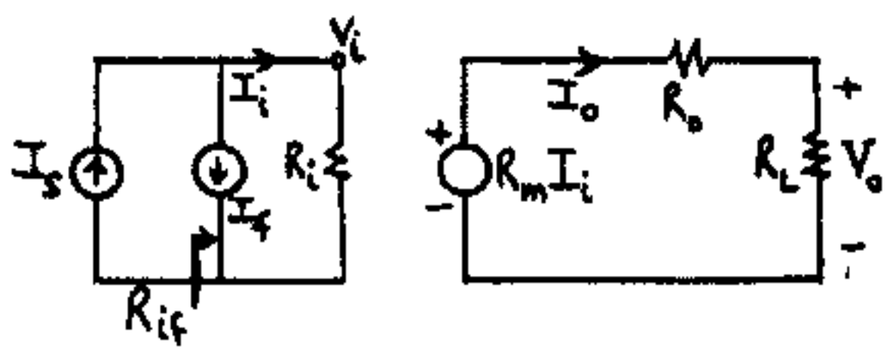

(c) We replace R_L with a voltage source V in the circuit of part (b) and set $I_s = 0$ then $I_o = -I = \frac{R_m I_i - V}{R_o}$ but $I_i = I_s - I_f = I_s - \beta V = -\beta V$ since $I_s = 0$

hence $I = \frac{(\beta R_m+1)V}{R_o}$ or $R_{of} = \frac{V}{I} = \frac{R_o}{\beta R_m+1}$. Now

$$R'_{of} = \frac{R_{of}R_L}{R_{of}+R_L} = \frac{R_oR_L}{R_o+R_L+R_LR_m\beta} = \frac{R_oR_L}{R_o+R_L} \times$$

$$\frac{1}{1+\beta\frac{R_mR_L}{R_o+R_L}} = \frac{R'_o}{1+\beta R_M} \text{ where } R'_o = \frac{R_oR_L}{R_o+R_L} \text{ and}$$

$$R_M = \frac{R_LR_m}{R_o+R_L}$$

(d) From the output circuit we have $I = \frac{V}{R_o} - G_m V_i$

but $V_i = -V_f = -\beta I_o = \beta I$ hence $I = \frac{V}{R_o} - \beta G_m I$ or

$R_{of} = \frac{V}{I} = R_o(1+\beta G_m)$. Also, $R'_{of} = \frac{R_{of}R_L}{R_{of}+R_L} =$

$$\frac{R_oR_L(1+\beta G_m)}{R_o+R_L+\beta G_mR_o} = \frac{R_oR_L}{R_o+R_L} \times \frac{1}{1+\frac{R_oG_m}{R_o+R_L}} \times (1+\beta G_m) =$$

$$R'_o \times \frac{1+\beta G_m}{1+\beta G_M} \quad \text{where } R'_o = \frac{R_oR_L}{R_o+R_L} \text{ and } G_M = \frac{R_oG_m}{R_o+R_L}$$

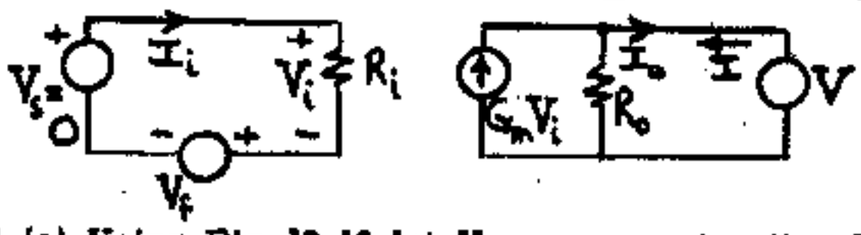

12-11 (a) Using Fig. 12-10 let V_{oc} = open circuit value of $V_o = A_vV_{i1}$. Let $I_{ss} = I_o|_{R_L=0}$ = $\frac{A_vV_{i2}}{R_o}$ but $V_{i1} = V_s - V_f = V_s - \beta V_{oc}$ hence $V_{oc} = A_vV_s - \beta A_vV_{oc}$ hence $V_{oc} = \frac{A_v}{1+\beta A_v}V_s$ and

$V_{i2} = V_s - V_f = V_s$ since $V_f = 0$; hence

$I_{ss} = \frac{A_vV_s}{R_o}$ but $R_{of} = \frac{V_{oc}}{I_{ss}} = \frac{R_o}{1+\beta A_v}$. Then

$$R'_{of} = \frac{R_{of}R_L}{R_L+R_{of}} = \frac{R_oR_L}{R_o+R_L} \times \frac{1}{1+\beta\frac{R_LA_v}{R_o+R_L}} = \frac{R_oR_L}{R_o+R_L} \times \frac{1}{1+\beta A_v}$$

$$= \frac{R'_o}{1+\beta A_v}$$

(b) For $R_L = \infty$, $V_{oc} = G_mR_oV_{i1}$ but $V_{i1} = V_s - V_f = V_s - \beta I_o = V_s$ since $I_o = 0$. Hence $V_{oc} = G_mR_oV_s$.

For $R_L = 0$ $I_{SS} = G_mV_{i2}$ but $V_{i2} = V_s - V_f = V_s - \beta I_o = V_s - \beta I_{SS}$ hence $I_{SS} = \frac{G_m}{1+\beta G_m}V_s$.

$R_{of} = \frac{V_{oc}}{I_{SS}} = (1+\beta G_m)R_o$. Then

$$R'_{of} = \frac{R_LR_o(1+\beta G_m)}{R_L+R_o+\beta G_mR_o} = R'_o\left(\frac{1+\beta G_m}{1+\beta G_M}\right) \quad \text{where}$$

$$R'_o = \frac{R_oR_L}{R_o+R_L} \quad \text{and} \quad G_M = \frac{R_oG_m}{R_o+R_L}$$

(c) Using Fig.12-11 we have

for $R_L = \infty$, $V_{oc} = R_oA_iI_{i1}$ but $I_{i1} = I_s - I_f = I_s - \beta I_o = I_s$ since $I_o = 0$. Hence $V_{oc} = R_oA_iI_s$.

For $R_L = 0$ $I_{ss} = A_iI_{i2}$ but $I_{i2} = I_s - I_f = I_s - \beta I_o = I_s - \beta I_{ss}$ hence $I_{ss} = [A_i/(1+\beta A_i)]I_s$

Then $R_{of} = \frac{V_{oc}}{I_{ss}} = (1+\beta A_i)R_o$ and

$$R'_{of} = \frac{R_LR_o}{R_L+R_o+R_o\beta A_i}(1+\beta A_i) = R'_o\left(\frac{1+\beta A_i}{1+\beta A_I}\right) \quad \text{where}$$

$$R'_o = \frac{R_oR_L}{R_o+R_L} \quad \text{and} \quad A_I = \frac{R_oA_i}{R_o+R_L}$$

(d) For $R_L = \infty$ $V_o = V_{oc} = R_mI_{i1}$ but $I_{i1} = I_s - I_f = I_s - \beta V_o = I_s - \beta R_mI_{i1}$ and $I_{i1} = \frac{I_s}{1+\beta R_m}$ hence

$V_{oc} = \frac{R_m}{1+\beta R_m}I_s$. For $R_L = 0$ $I_o = I_{ss} = \frac{R_mI_{i2}}{R_o}$ but

$I_{i2} = I_s - I_f = I_s - \beta V_o = I_s$ since $V_o = 0$; hence

$R_{of} = \frac{V_{oc}}{I_{ss}} = \frac{R_o}{1+\beta R_m}$ and $R'_{of} = \frac{R_oR_L}{R_L+R_o+\beta R_mR_L} =$

$$\frac{R_oR_L}{R_o+R_L} \times \frac{1}{1+\beta\frac{R_LR_m}{R_o+R_L}} = \frac{R'_o}{1+\beta R_M}$$

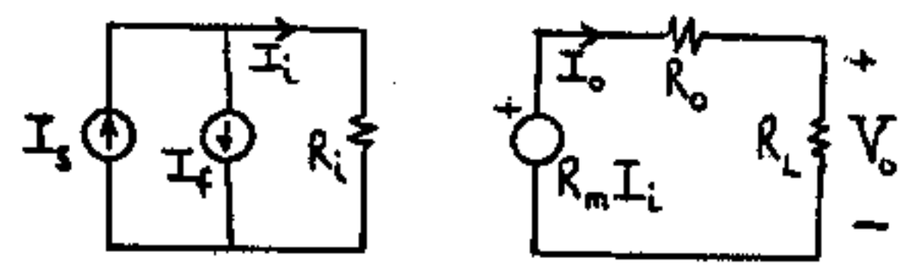

12-12 The h-parameter equivalent circuit is shown;

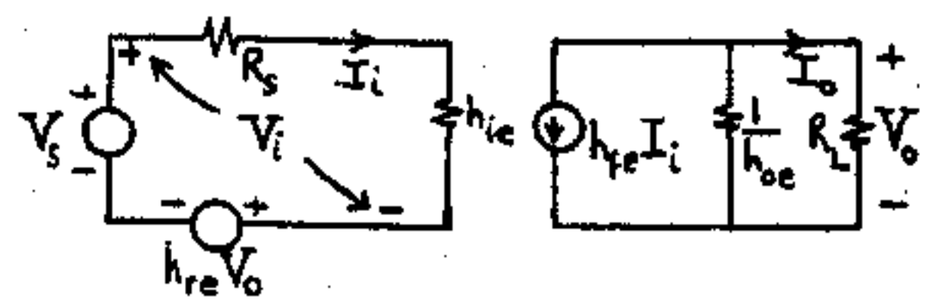

(a) We assume the source resistance is included in the open loop amplifier stage. Since $V_f = h_{re}V_o$ or $\beta = h_{re} = V_f/V_o$, we have voltage-series feedback $V_i = V_s - V_f = I_i(R_s + h_{ie})$. $V_f = h_{re}V_o = h_{re}I_oR_L = -h_{re}R_L \times h_{fe}I_i \times \frac{1/h_{oe}}{(1/h_{oe})+R_L} = \frac{-h_{re}R_Lh_{fe}I_i}{1+h_{oe}R_L}$. Thus,

$V_s = I_i\left[R_s + h_{ie} - \frac{h_{re}R_Lh_{fe}}{1+h_{oe}R_L}\right]$. Hence,

$$R_{if} = V_s/I_i = \underline{R_s + h_{ie} - \frac{h_{re}R_Lh_{fe}}{1+h_{oe}R_L}}.$$

(b) To find Y_{of} set $V_s = 0$, $R_L = \infty$ and apply a voltage V across the output. If the current I is drawn from then $Y_o = I/V$. From the figure $I = h_{fe}I_i + h_{oe}V$ and $I_i = -\frac{h_{re}V}{R_s+h_{ie}}$. Hence

$$Y_{of} = \frac{-h_{fe}h_{re}}{R_s+h_{ie}} + h_{oe}$$

12-13 (a) The total resistance without feedback, seen by the voltage source V_s, is $R_i = R_s + R'_i$. Hence, R_{if} is given by Eq. (12-14) where the gain must be interpreted as the amplification taking R_s into account external to the amplifier. Thus,

$R_{if} = R_i(1+\beta A_{V_s}) = (R_s+R_i')(1+\beta A_{V_s})$

(b) The input circuit without feedback is given by;

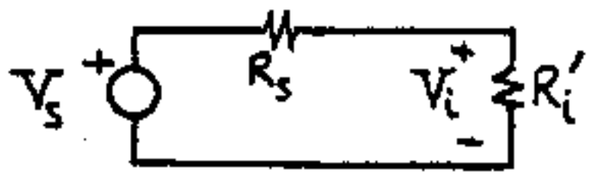

$A_{V_s} = \frac{V_o}{V_s} = \frac{V_o}{V_i} \times \frac{V_i}{V_s} = A_V \times \frac{R_i'}{R_i'+R_s}$ because

$V_o = A_V V_i$ without feedback. Thus, $R_{if} =$

$(R_s+R_i')(1+\frac{\beta A_V R_i'}{R_i'+R_s}) = R_s+R_i'+\beta A_V R_i' =$

$R_s+R_i'(1+\beta A_V)$. If R_s is not part of the amplifier, then V_s sees $R_{if}'+R_s$ where $R_{if}' = R_i'(1+\beta A_V)$, which is Eq. (12-14) for the case where R_s is considered external to the amplifier.

12-14 (a) Here, $X_f = V_f$. $\beta = \frac{-R_1}{R_g} = \frac{V_f}{V_o}$, thus, we have voltage-series feedback.

To find the input circuit, we short the output node. Thus we obtain $R' = R_2 \| R_1 = 999.95\ k\Omega \| 50\ \Omega \approx 50\ \Omega$, in series with the input loop. To find the output circuit, the input loop is opened. Thus, R_g loads the output. The following equivalent circuit is obtained by replacing each FET with its small signal model;

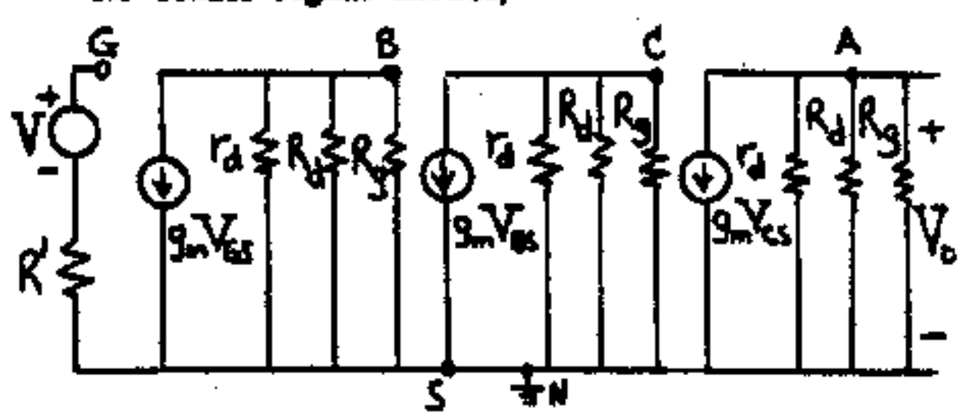

$A_{V1} = V_{BS}/V_{GS} = -g_m \times (r_d \| R_d \| R_g) = A_{V2} = A_{V3} =$

$-5(8\|40\|10^3) = -5\times 6.62 = -33.1$. $A_{V2} = V_{CN}/V_{BN} = A_{V1}$

and $A_{V3} = V_{AN}/V_{CN} = A_{V1}$ because the stages are identical. Thus, $A_V = A_{V1}^3 = -3.626\times 10^4$.

$\beta = \frac{-R_1}{R_g} = \frac{-50}{10^6} = -5\times 10^{-5}$. Hence, $D = 1+\beta A_V =$

$1+5\times 10^{-5}\times 3.626\times 10^4 = 2.813$. $A_{Vf} = A_V/D =$

$-3.626\times 10^4/2.813 = \underline{-1.289\times 10^4}$.

$R_{of} = R_o/1+\beta A_v = R_o/1+\beta A_V = (r_d\|R_d\|R_g)/1+\beta A_V =$

$6.62/2.813 = \underline{2.35\ k\Omega}$. (Note; R_g was considered as part of the stage.)

(b) If the output is taken across BN, then the last two stages are part of the β network. Thus,

A_V(without feedback) $= -33.1$; $\beta = V_f/V_{BN} =$

$\frac{V_f}{V_{AN}} \frac{V_{AN}}{V_{CN}} \frac{V_{CN}}{V_{BN}} = (-\frac{R_1}{R_g}) A_{V3}A_{V2} =$

$(-5\times 10^{-5})(-33.1)^2 = -5.478\times 10^{-2}$. Thus, $D = 1+\beta A_V =$

$1+5.478\times 10^{-2}\times 33.1 = 2.813$ (as in part (a)). Thus

$A_{Vf} = A_V/D = -33.1/2.813 = \underline{-11.77}$. $R_o = 6.62\ k\Omega$

again, thus, $R_{of} = R_o/(1+\beta A_V) = 6.62/2.813 = \underline{2.35\ k\Omega}$ as in part (a).

12-15 The circuit is redrawn as follows;

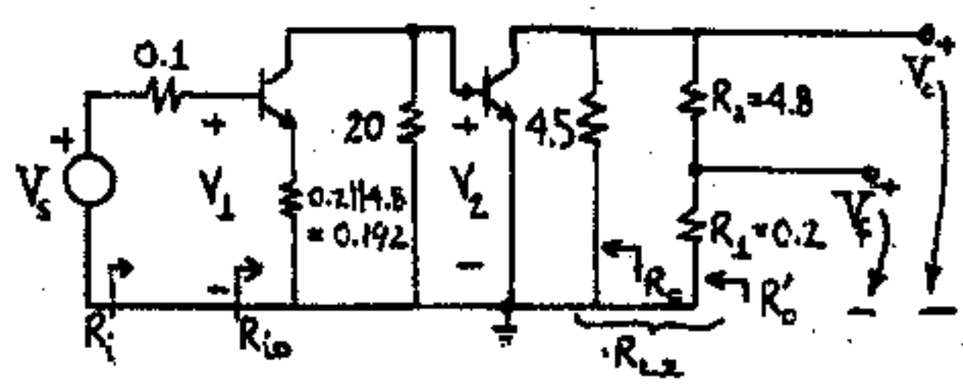

(a) Applying the tests in Sec. 12-7 we observe that we have voltage-series feedback. To find the input circuit, we short the output node to ground. Thus, we find the 4.8 kΩ resistor in parallel with the 200 Ω resistor. To find the output circuit, we open the input loop.

Thus, we obtain $(R_1+R_2)\|4.5\ k\Omega = 5\|4.5 = 2.37\ k\Omega = R_{L2}$ A_V(without feedback) $= V_o/V_s =$

$\frac{V_o}{V_2} \frac{V_2}{V_1} \frac{R_{io}}{R_{io}+0.1} = A_{V1}A_{V2}\frac{R_{io}}{R_{io}+0.1}$ where

$R_{io} = h_{ie}+(1+h_{fe})R_e = 2.5+(151)0.192 = 31.49\ k\Omega$.

$A_{V2} = \frac{-h_{fe}R_{L2}}{h_{ie}} = \frac{-150\times 2.37}{2.5} = -142.2$.

$A_{V1} = \frac{-h_{fe}R_{L1}}{R_{io}} = \frac{-h_{fe}\times(20\|h_{ie})}{R_{io}} = \frac{-150\times 2.22}{31.49}$

$= -10.57$. Thus, $A_V = 142.2\times 10.57\times\frac{31.49}{31.59} = 1498.3$

$D = 1+\beta A_V$ where $\beta = \frac{R_1}{R_1+R_2} = \frac{0.2}{4.8+0.2} = 0.04$.

Thus, $D = 1+0.04\times 1498.3 = 60.93$. $A_{Vf} = A_V/D =$ $1498.3/60.93 = \underline{24.59}$. Note that $A_{Vf} \approx 1/\beta = 1/0.04 = 25$.

(b) The input resistance without feedback seen by V_s is $R_i = R_{io}+0.1 = 31.59\ k\Omega$. The input resistance with feedback is $R_{if} = R_iD = 31.59\times 60.93$ $= \underline{1924.8\ k\Omega} = 1.925\ M\Omega$

(c) $R_o = 4.5\ k\Omega$. $R_{of} = R_o/D = 4.5/60.93\ k\Omega = \underline{73.86\ k\Omega}$

(d) $R_{of}' = R_{of}\|R_L = 73.86\|5\times 10^3 = \underline{72.78\ \Omega}$.

12-16 (a) Applying the tests in Sec. 2-7, this is clearly a case of voltage-series feedback. To obtain the amplifier without feedback, but loaded by the β network we observe that

1) with the output shorted (voltage sampling) the effect on the input is to place R in parallel

with R_s.

2) with the input opened (series comparison) the effect on the output is to place R_s in series with R.

Thus, we obtain the following circuit (where the equivalent circuit of Fig. 11-30 is used for each FET):

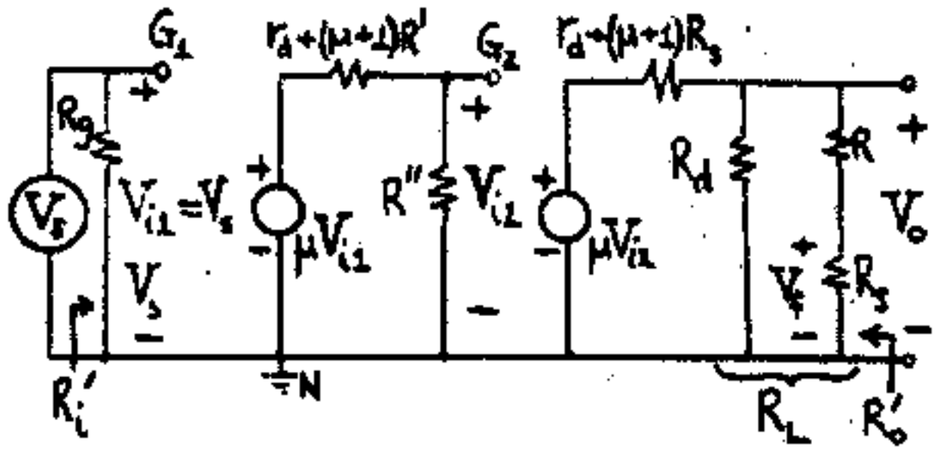

where $R' = R_s \| R = (0.3 \times 10)/(10+0.3) = 0.291$ kΩ,

$R'' = R_d \| R_g = (50 \times 1000)/(50+1000) = 47.6$ kΩ

$R_L = R_d \| (R+R_s) = 50 \| 10.3 = 8.54$ kΩ

From this Figure, $\beta = V_f/V_o = R_s/(R+R_s) = 0.3/10.3 = 0.0291$ and $A_V = \frac{V_o}{V_s} = \frac{V_o}{V_{i2}} \frac{V_{i2}}{V_s}$

$$= \frac{-\mu R_L}{R_L+(\mu+1)R_s+r_d} \times \frac{-\mu R''}{R''+(\mu+1)R'+r_d} =$$

$$\frac{-30 \times 8.54}{8.54+9.3+10} \times \frac{-30 \times 47.6}{47.6+9.021+10} = 9.2 \times 21.43 = 197.16$$

Thus $D = 1+\beta A_V = 1+0.0291 \times 197.16 = 6.74$ and

$A_{Vf} = A_V/D = 197.16/6.74 = \underline{29.25}$

(b) $R_i = R_g = 1$ MΩ and $R_{if} = R_i D = 1 \times 6.74 = \underline{6.74 \text{ MΩ}}$.

(c) $R_o' = R_L \| [(\mu+1)R_s + r_d] = 8.54 \| [(31 \times 0.3)+10] = 8.54 \| 19.3 = 5.92$ kΩ

Thus, from table 12-4 $R_{of}' = R_o'/D = 5.92/6.74 = \underline{0.878 \text{ kΩ}}$

12-17 $A_f = \frac{-h_{fe}R_L}{R_s+h_{ie}+h_{fe}R_s}$ from Eq. (12-57) with $h_{fe} \gg 1$.

To find the value of R_e corresponding to $dA_f/A_f = Y_f$ we have $\frac{dA_f/A_f}{dh_{fe}/h_{fe}} = \frac{dA_f}{dh_{fe}} \frac{h_{fe}}{A_f} =$

$$\frac{(R_s+h_{ie}+h_{fe}R_e)(-R_L)+h_{fe}R_LR_e}{(R_s+h_{ie}+h_{fe}R_e)^2} \cdot \frac{(R_s+h_{ie}+h_{fe}R_e)h_{fe}}{-h_{fe}R_L}$$

or $\frac{Y_f}{dh_{fe}/h_{fe}} = \frac{(R_s+h_{ie})}{(R_s+h_{ie}+h_{fe}R_e)}$ and $\frac{(dh_{fe}/h_{fe})}{Y_f} =$

$\frac{R_s+h_{ie}+h_{fe}R_e}{R_s+h_{ie}} = 1+\frac{h_{fe}R_e}{R_s+h_{ie}}$. Finally

$\frac{h_{fe}R_e}{R_s+h_{ie}} = \frac{(dh_{fe}/h_{fe})}{Y_f} - 1$ from which

$$R_e = \frac{R_s+h_{ie}}{h_{fe}} \left(\frac{dh_{fe}/h_{fe}}{Y_f} - 1 \right)$$

12-18 (a) Since the resistance R in the input loop has a voltage across it which is obtained from the output then this is a case of series comparison. The voltage across R is V_f, with the polarity shown in Fig. (a).

If V_o is set to 0 (the output node shorted) then the drain current is not reduced to zero. Hence, the source current is not zero and V_f (the drop across R) does not drop to zero. Hence, this is <u>not</u> voltage sampling. If, on the other hand, we set $I_o=0$, then $V_f=0$. Therefore, the circuit exhibits the current-series topology and the transconductance G_{Mf} is stabilized.

(b) To find the input circuit set $I_o=0$. To find the output circuit, open the input loop. The result is shown Fig. (b). If we replace the FET by its small-signal model, the result is shown in Fig. (c).

(c) We first find G_m without feedback from Fig. (c).

$$G_M = \frac{I_o}{V_i} = \frac{I_o}{V_s} = \frac{-g_m r_d}{r_d+R_L+R} = \frac{-\mu}{r_d+R_L+R}$$

where $\mu = r_d g_m$ from Eq. (11-79).

$$\beta = \frac{V_f}{I_o} = -R$$

$$D = 1+\beta G_M = 1+\frac{\mu R}{r_d+R_L+R} = \frac{r_d+R_L+(\mu+1)R}{r_d+R_L+R} \qquad (1)$$

$$G_{Mf} = \frac{G_M}{D} = \frac{-\mu}{r_d+R_L+(\mu+1)R}$$

If $\mu \gg 1$ and $\mu R \gg r_d + R_L$ then $G_{Mf} \approx -\frac{1}{R}$ and is stable if R is a stable resistance.

(d) $A_{Vf} = \frac{V_o}{V_s} = \frac{I_oR_L}{V_s} = G_{mf}R_L = \frac{-\mu R_L}{r_d+R_L+(\mu+1)R}$

which agrees with Eq. (11-86)

$A_{Vf} \approx -\frac{R_L}{R}$ and is stable if R_L and R are stable resistances.

(e) Since $R_i = \infty$, then

$$R_{if} = R_i D = \infty$$

(f) If R_L is considered to be an external load, then from Fig. (c), with $V_s=0$

$$R_o = r_d + R$$

To calculate R_{of} we need G_m, and from Eq. (12-17), $G_m = \lim_{R_L \to 0} G_M$. Since β is independent of R_L, then using Eq. (1),

$$1+\beta G_m = \lim_{R_L \to \infty} D = \frac{r_d+(\mu+1)R}{r_d+R}$$

$$R_{of} = R_o(1+\beta G_m) = (r_d+R)\frac{r_d+(\mu+1)R}{r_d+R} = r_d+(\mu+1)R$$

The above result agrees with that obtained in Fig. 11-30.

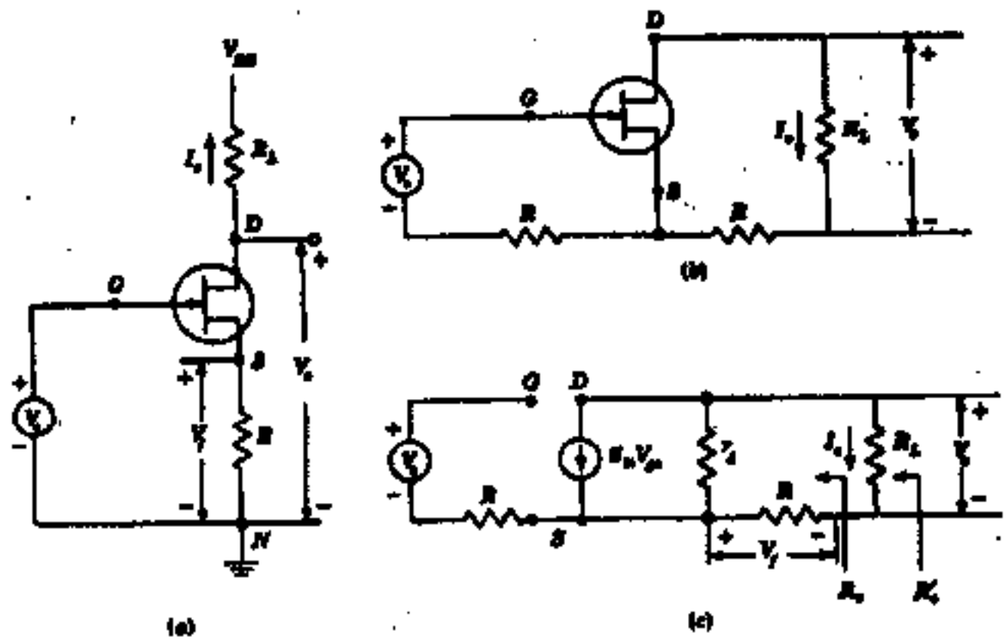

(g) R'_{of} is most easily calculated as $R_L \| R_{of}$. The same result may be obtained from the expression in Table 12-4, with $R'_o = R_L \| R_o$. Thus

$$R'_{of} = R'_o \frac{1+\beta G_m}{D}$$

$$= \frac{(r_d+R)R_L}{r_d+R_L+R}\,\frac{r_d+(\mu+1)R}{r_d+R}\,\frac{r_d+R_L+R}{r_d+R_L+(\mu+1)R}$$

$$= \frac{R_L[r_d+(\mu+1)R]}{r_d+R_L+(\mu+1)R}$$

which is equivalent to R_L in parallel with R_{of}.

12-19 (a) In this problem we have series mixing and the feedback voltage is across R_4. If $I_o = 0$ then $V_f = 0$. (Note; if we set $V_o = 0$, the current in Q3 is not reduced to zero and $V_f \neq 0$. Thus, this is not voltage sampling.) Hence, we have current sampling and current-series feedback. To obtain the input circuit, we open the output loop ($I_o = 0$) and this places the series combination $R'+R_5$ in parallel with R_4. To obtain the output circuit we open the input loop ($I_i = 0$) and this places $R'+R_4$ in parallel with R_5. Thus, we obtain the following figure;

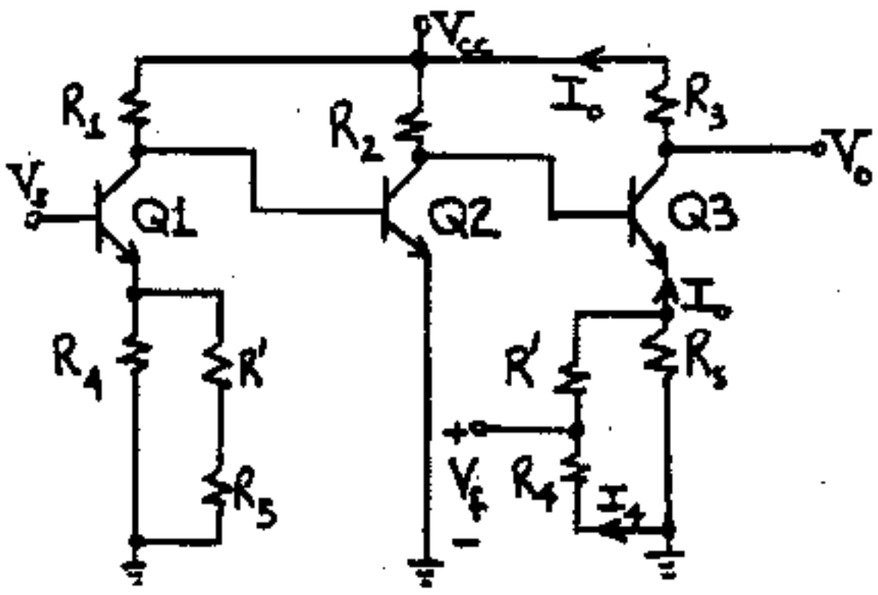

(b) $\beta = x_f/x_o = V_f/I_o = \dfrac{-I_4R_4}{I_o} = -R_4 \times \dfrac{R_5}{R_5+R_4+R'}$

(c) $A_{Vf} = V_o/V_s = I_oR_3/V_s = G_{MF}R_3$.

If the loop gain is much greater than unity then $G_{MF} \approx 1/\beta$. Hence, $A_{Vf} \approx R_3/\beta = \dfrac{-R_3(R_4+R_5+R')}{R_4R_5}$

12-20 We clearly have shunt mixing. To find the type of sampling we see that the current in the 1 kΩ emitter resistor does not reduce to zero if we set $V_o = 0$. If we set $I_o = 0$ then there is no feedback current from the output. Thus we have a case of current sampling and current-shunt feedback. We find the basic amplifier circuit without feedback using the third column of Table 12-4; namely; set $I_o = 0$ to find the input circuit and $V_f = 0$ to find the output circuit. With a Norton's transformation of the voltage source we obtain the following figure.

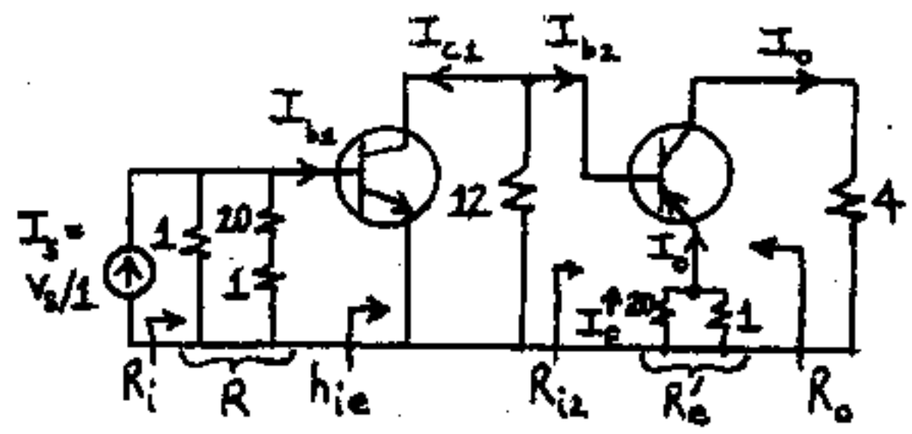

In this figure $R = (20+1)\|1 = 21/22 = 0.955$ kΩ and $R'_e = 1\|20 = 20/21 = 0.952$ kΩ. If we neglect I_{b2} compared with I_o,

$$\beta = I_f/I_o = 1/(20+1) = 0.0476$$

(a) The current gain is stabilized. From the figure above

$$A_I = \frac{I_o}{I_s} = \frac{I_o}{I_{b2}} \cdot \frac{I_{b2}}{I_{c1}} \cdot \frac{I_{c1}}{I_{b1}} \cdot \frac{I_{b1}}{I_s}$$

$$= (-h_{fe})\left(-\frac{12}{12+R_{i2}}\right)(h_{fe})\left(\frac{R}{h_{ie}+R}\right) \qquad (1)$$

where $R_{i2} = h_{ie}+(1+h_{fe})R'_e = 2+(101)0.952 = 98.15$ kΩ from Eq. (12-58). Thus

$$A_I = (-100)\left(-\frac{12}{12+98.15}\right)(100)\left(\frac{0.955}{2+0.955}\right) = 352.3.$$

Therefore $D = 1+\beta A_I = 1+0.0476\times 352.3 = 17.77$ and

$$A_{If} = \frac{A_I}{D} = \frac{352.3}{17.77} = \underline{19.83}$$

(b) $A_{Vf} = \dfrac{V_o}{V_s} = \dfrac{4I_o}{1I_s} = 4A_{If} = \underline{79.32}$

(c) $R_i = R\|R_{ie} = (0.955\times 2)/(0.955+2) = 0.646$ kΩ and

$R_{if} = R_i/D = 0.646/17.77$ kΩ $= \underline{36.36\ \Omega}$; note that this is the resistance seen by the current source. To find the input resistance seen by the voltage

source of the Fig. in the statement of the problem, one would have to follow the steps of the illustrative problem in Sec. 12-11. Thus

$$R_{if}=R'_{if}\|R_s=\frac{1000\,R'_{if}}{R'_{if}+1000}=\underline{36.36\ \Omega}$$

Solving, gives $R'_{if}=37.73\ \Omega$

The voltage source V_s sees $1037.73\ \Omega$.

(d) Notice that since A_I is independent of $R_L=4\ k\Omega$, $A_i=\lim_{R_L\to 0}A_I=A_I$. Since $R_o=\infty$, we get from Table 12-4 $R_{of}=R_o(1+\beta A_i)=\underline{\infty}$. Also, notice that since $R'_o=R_o\|R_L=R_L=4\ k\Omega$,

$$R'_{of}=R'_o\frac{1+\beta A_i}{1+\beta A_I}=R'_o=\underline{4\ k\Omega}$$

12-21 In this example we have current-shunt feedback. To find the amplifier circuit without feedback we open the output loop to obtain the input circuit and short the input node to obtain the output circuit. Thus, we obtain (using a Norton's source),

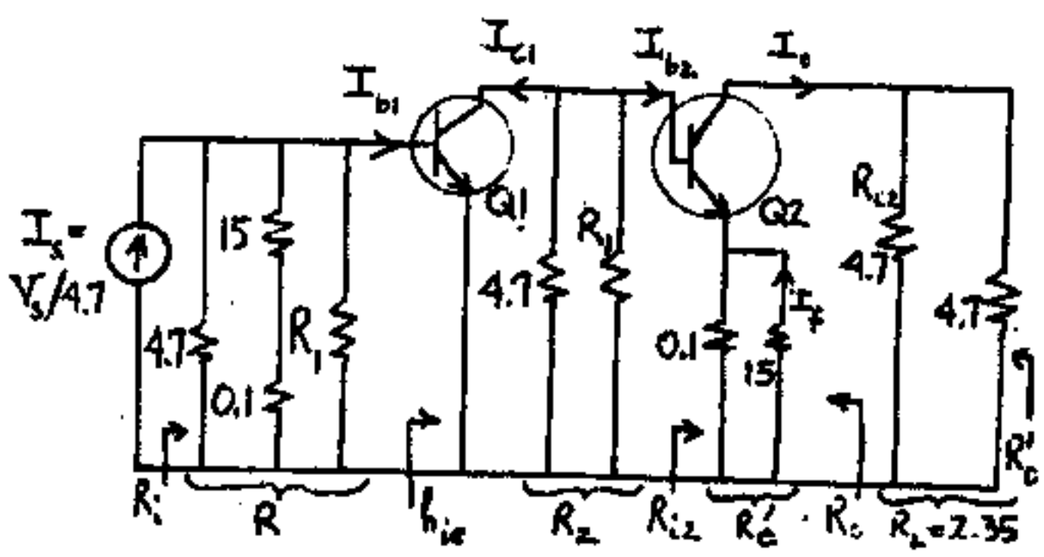

where: $R_1=10\|91=10\times 91/101=9.01\approx 9.0\,k\Omega$, $R'_e=15\|0.1=15\times 0.1/15.1=0.0993\,k\Omega$, $R_2=4.7\|R_1=4.7\times 9.0/13.7=3.09\,k\Omega$, $R=(4.7\|R_1)\|15.1=3.09\|15.1=2.57\,k\Omega$, and from Eq. (12-58) $R_{i2}=h_{ie}+(1+h_{fe})R'_e=3+(151)0.0993\approx 18.0\ k\Omega$. Neglecting I_{b2} in Q2, $\beta=I_f/I_o=0.1/(15+0.1)=0.00662$. The current gain is stabilized and for the above circuit

$$A_I=\frac{I_o}{I_s}=\frac{I_o}{I_{b2}}\frac{I_{b2}}{I_{c1}}\frac{I_{c1}}{I_{b1}}\frac{I_{b1}}{I_s}$$

$$=(-h_{fe})\left(\frac{-R_2}{R_2+R_{i2}}\right)(h_{fe})\left(\frac{R}{R+h_{ie}}\right)$$

$$=(-150)\left(\frac{-3.09}{3.09+18.0}\right)(150)\left(\frac{2.57}{2.57+3}\right)=1521,\quad\text{and}$$

from Table 12-4 $D=1+\beta A_I=1+0.00662\times 1521=11.07$. Thus

(a) $A_{If}=A_I/D=1521/11.07=\underline{137.4}$

(b) $A_{Vf}=\dfrac{V_o}{V_s}=\dfrac{I_oR_L}{I_s\,4.7}=A_{If}\dfrac{2.35}{4.7}=137.4\dfrac{2.35}{4.7}=\underline{68.7}$

(c) From the above Figure, $R_i=R\|h_{ie}=2.57\times 3/5.57=1.38\ k\Omega$; thus from Table 12-4 $R_{if}=R_i/D=1.38/11.0.7=0.125\ k\Omega=\underline{125\ \Omega}$ is the resistance seen by the current source. To find the resistance seen by the voltage source, proceed as in the illustrative example in Sec. 12-11. From the given circuit $R_{if}=R'_{if}\|4.7$

$$0.125=\frac{4.7\,R'_{if}}{R'_{if}+4.7}\quad\text{or}\quad R'_{if}=0.128\ k\Omega=128\ \Omega$$

<u>NOTE:</u> The resistance seen by the voltage $V_s=4.7+0.127=4.827\ k\Omega$

(d) The output resistance $R_o=\infty$ (from the Figure above). Noticing that A_I is independent of R_L we have $A_i=\lim_{R_L\to 0}(A_I)=A_I$, and

$$R_{of}=R_o(1+\beta A_i)=\infty\qquad R'_{of}=R_{of}\|R_L=R_L=\underline{2.35\ k\Omega}$$

12-22 (a) If $I_o=0$ there is no feedback. Hence, from the rules in Sec. 12-7 we have current-shunt topology and A_{If} is stabilized by this amplifier. Following the rules in the third column of Table 12-4, we obtain the following circuit if we use a Norton's circuit for the input source.

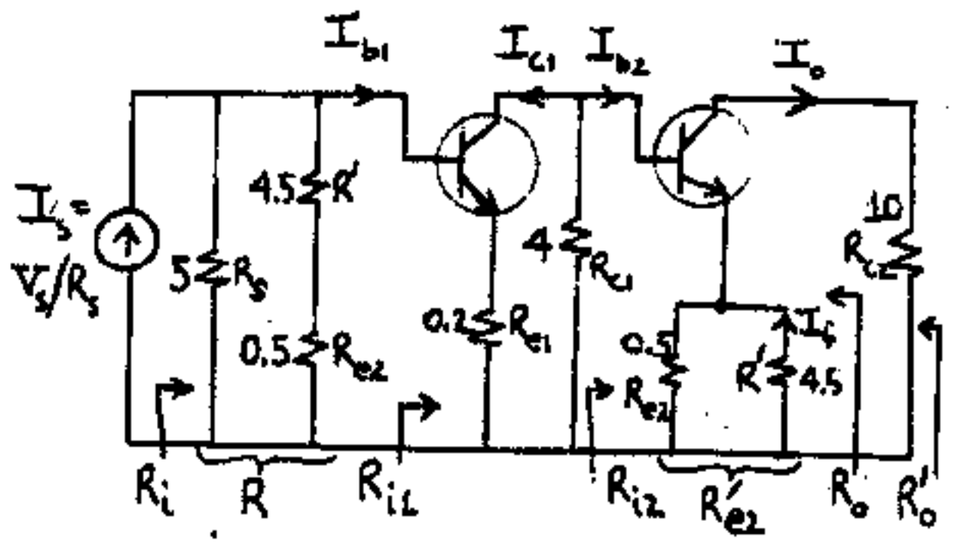

where: $R=(R'+R_{e2})\|R_s=(4.5+0.5)\|5=2.5\ k\Omega$; $R'_{e2}=R_{e2}\|R'=4.5\times 0.5/(4.5+0.5)=0.45\ k\Omega$; from Eq. (12-58) $R_{i1}=h_{ie}+(1+h_{fe})R_{e1}=1+(101)0.2=21.2\ k\Omega$ and $R_{i2}=h_{ie}+(1+h_{fe})R'_{e2}=1+(101)0.45=46.45\ k\Omega$,

$$A_I=\frac{I_o}{I_s}=\frac{I_o}{I_{b2}}\frac{I_{b2}}{I_{c1}}\frac{I_{c1}}{I_{b1}}\frac{I_{b1}}{I_s}$$

$$=(-h_{fe})\left(-\frac{R_{c1}}{R_{c1}+R_{i2}}\right)(h_{fe})\left(\frac{R}{R+R_{i1}}\right)$$

$$=(-100)\left(-\frac{4}{4+46.45}\right)(100)\left(\frac{2.5}{2.5+21.2}\right)=83.64\quad\text{and}$$

Neglecting I_{b2} in the output circuit, $\beta=I_f/I_o=0.5/(0.5+4.5)=0.1$. Thus $D=1+\beta A_I=1+0.1\times 83.64=9.364$ and $A_{If}=A_I/D=83.64/9.364=\underline{8.932}$

(b) $A_{Vf} = \frac{V_o}{V_s} = \frac{R_{c2} I_o}{R_s I_s} = \frac{R_{c2}}{R_s} A_{If} = \frac{10}{5} 8.932$

$= \underline{17.864}$

(c) $R_i = R \| R_{i1} = 2.5 \| 21.2 = 2.24$ kΩ. From Table 12-4 $R_{if} = R_i/D = 2.24/9.364 = \underline{0.239 \text{ k}\Omega} = 239\ \Omega$

The resistance to the right of the source in the original circuit is R'_{if} and

$R_{if} = R_s \| R'_i$ or $0.239 = \frac{5R'_{if}}{5+R'_{if}}$ and, solving,

$R'_{if} = 0.251$ kΩ. Thus the resistance seen by V_s is $R_s + R'_{if} = 5 + 0.251 = \underline{5.251 \text{ k}\Omega}$

(d) Notice that since A_I is independent of R_{c2}, $A_i = \lim_{R_{c2} \to 0} (A_I) = A_I = 83.64$ and since $R_o = \infty$

$R_{of} = R_o(1+\beta A_i) = \infty$

$R'_o = R_{c2}$ and $R'_{of} = R'_o \frac{1+\beta A_i}{D} = R'_o = 10$ kΩ.

Also $R'_{of} = R_{of} \| R_L = \infty \| R_{c2} = 10$ kΩ

12-23 As in Sec. 12-12, this is a voltage-shunt configuration. Thus, following the rules in Sec. 12-7, we obtain the figure shown below; the transfer gain stabilized by this type of feedback is the transresistance R_{Mf}.

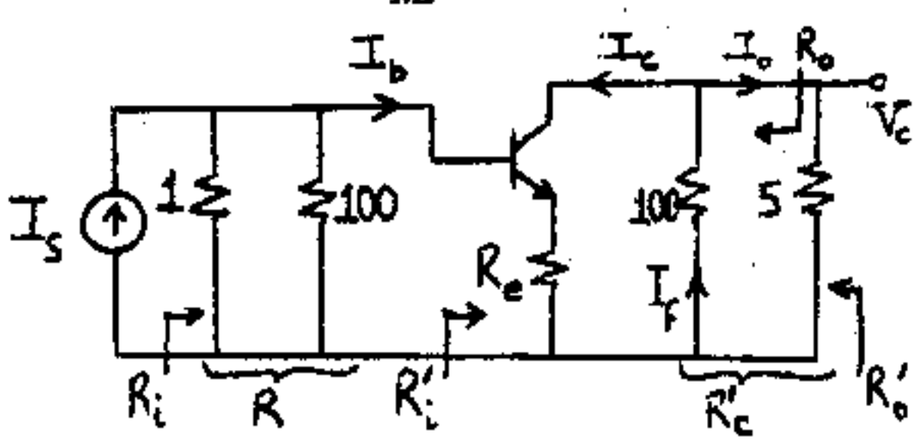

where $R = 1 \| 100 = 0.99$ kΩ and $R'_c = 100 \| 5 = 4.76$ kΩ.

(a) $R_M = \frac{V_o}{I_s} = \frac{5 \times I_o}{I_s} = 5 \frac{I_o}{I_c} \frac{I_c}{I_b} \frac{I_b}{I_s}$

$= 5 \frac{-100}{100+5} (-h_{fe}) \frac{R}{R+h_{ie}}$ (1)

$R_M = 5 \times (-150) \times \frac{100}{105} \times \frac{0.99}{0.99+2} = -236.5$ kΩ.

Since $I_f \approx \frac{-V_o}{100}$, $\beta = \frac{I_b}{V_o} = \frac{-1}{100} = -10^{-2}$. Thus,

$D = 1+\beta R_M = 1+236.5 \times 10^{-2} = 3.365$. Hence, $R_{Mf} = R_M/D = -236.5/3.365 = \underline{-70.28 \text{ k}\Omega}$.

(b) $A_{Vf} = V_o/V_s = \frac{V_o}{I_s \times 1} = R_{Mf}/1 \text{ k}\Omega = \underline{-70.28}$

(c) $R_i = R \| h_{ie} = 0.99 \times 2/2.99$ kΩ $= 622.2\ \Omega$. Thus, $R_{if} = R_i/D = 622.2/3.365 = \underline{184.9\ \Omega}$

(d) $R'_o = \frac{100 \times 5}{105} = 4.762$ and from Table 12-4

$R'_{of} = \frac{R'_o}{D} = \frac{4.762}{3.365} = 1.415$ kΩ

(e) Repeating the above calculations taking

$R_s = 0.5$ kΩ gives; $R_M = \frac{V_o}{I_s} = \frac{5I_o}{I_s} = 5 \frac{I_o}{I_c} \frac{I_c}{I_b} \frac{I_b}{I_s}$

$= 5 \times \frac{100}{100+5} (-h_{fe}) \frac{R}{R+R'_i}$ where $R'_i = h_{ie} + (1+h_{fe})R_e$

$= 2+151 \times 0.5 = 77.5$ kΩ. Thus, $R_M = 5 \times (-150) \times \frac{100}{105} \times \frac{0.99}{77.5+0.99} = -9.01$ kΩ. $D = 1+\beta R_M = 1+10^{-2} \times 9.01 = 1.09$. $R_{Mf} = R_M/D = -9.01/1.09$

$= \underline{-8.266 \text{ k}\Omega}$. $A_{Vf} = \underline{-8.266}$. $R_i = R \| R'_i = 0.99 \| 77.5$ kΩ $= 977.5\ \Omega$. Thus, $R_{if} = R_i/D = 977.5/1.09 = \underline{896.8\ \Omega}$

$R'_{of} = \frac{R'_o}{D} = \frac{4.762}{1.09} = \underline{4.369 \text{ k}\Omega}$

12-24 (a) If we set $V_o = 0$, the feedback current from the output node is reduced to zero, indicating that we have voltage sampling. From the discussion in Sec. 12-7 it also follows that shunt mixing is used. If the excitation is expressed as a Norton's equivalent and using Table 12.4 and the small signal model for the FET, the following circuit is obtained. Hence, this is a case of voltage-shunt feedback and the transresistance is is stabilized here. Notice that $R_i = 60 \| 200 \| 500 = 42.25$ kΩ and $R = 40 \| 500 \| 20 = 13.0$ kΩ

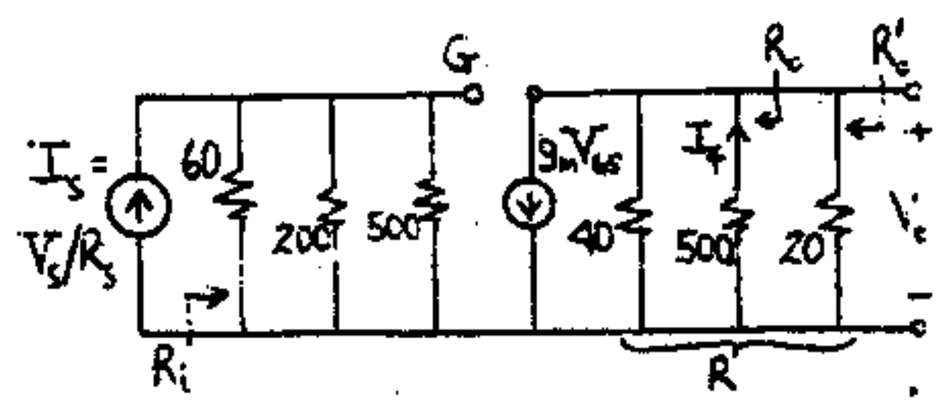

(b) $R_M = V_o/I_s$. $V_o = -g_m V_{gs} R =$

$= -2 \times 13.0\ V_{gs} = -26.0\ V_{gs}$; $V_{gs} = R_i I_s = 42.25\ I_s$.

Thus, $R_M = -26.0 \times 42.25 = -1099.$ kΩ

$\beta = I_f/V_o = -\frac{1}{500}$. Hence,

$D = 1+(1099/500) = 3.198$; $R_{Mf} = -R_M/D = -1099/3.198 = \underline{-343.7 \text{ k}\Omega}$

(c) $A_{Vf} = V_o/V_s = V_o/R_s I_s = R_{Mf}/R_s = -343.7/60 = \underline{-5.73}$.

(d) $R_{if} = R_i/D = 42.25/3.198 = 13.21$ kΩ

(e) $R'_o = R = 13.0$ kΩ, and from Table 12-4

$R'_{of} = R'_o/D = \frac{13.0}{3.198} = 4.065$ kΩ.

Table 12-4 we obtain the following circuit without feedback where $R = 0.1 \| 3 = 96.77\ \Omega$, $R'_c = 3 \| 6 = 2\ k\Omega$, and $R'_{e1} = 4 \| h_{ie} = 1.333\ k\Omega$

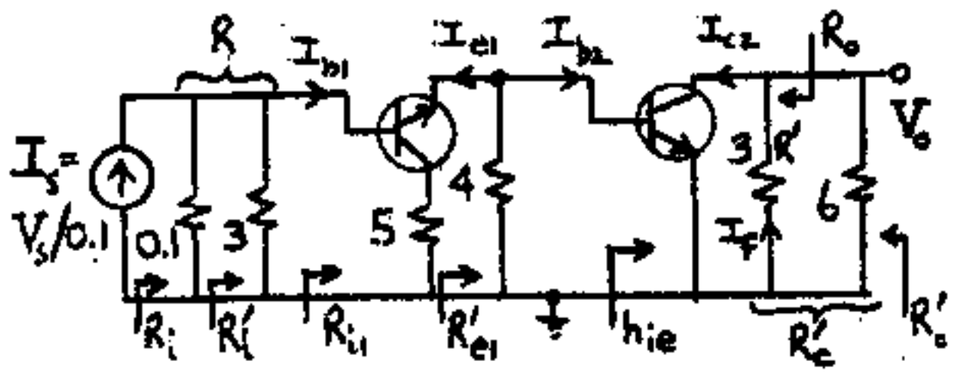

$$R_M = V_o/I_s = \frac{-R'_c \times I_{c2}}{I_s} = \frac{-R'_c I_{c2}}{I_{b2}} \times \frac{I_{b2}}{I_{e1}} \times \frac{I_{e1}}{I_{b1}} \times \frac{I_{b1}}{I_s} =$$

$$-R'_c h_{fe} \frac{-4}{4+h_{ie}} \{-(1+h_{fe})\} \left(\frac{R}{R+R_{i1}}\right) \qquad (1)$$

where $R_{i1} = h_{ie} + (1+h_{fe})R'_{e1} = 2 + 101 \times 1.333 = 136.6\ k\Omega$

Thus, $R_M = -2 \times 100 \times \frac{4}{4+2} \times 101 \times \frac{0.09677}{136.6+0.09677} =$ $-9.533\ k\Omega$; $\beta = I_f/V_o = -\frac{1}{3}$. Thus, $D = 1+\beta R_M =$ $1+9.533/3 = 4.178$. Hence, $R_{Mf} = R_M/D = -9.533/4.178 =$ $\underline{-2.282\ k\Omega}$

(b) $A_{Vf} = V_o/V_s = V_o/I_s R_s = R_{Mf}/R_s = -2.282/0.1 =$ $\underline{-22.82}$

(c) $R_i = R \| R_{i1} = .09677 \| 136.7 = 96.7\ \Omega$

$R_{if} = R_i/D = 96.7/4.178 = \underline{23.15\ \Omega} = 100 \| R'_i = \frac{100R'_i}{100+R'_i}$.

Thus, $R'_i = 30.12\ \Omega$

Thus, the resistance seen by V_s is $100+30.12 =$ $\underline{130.1\ \Omega}$.

(d) $R_{of} = R_o/(1+\beta R_m)$ where $R_o = 3\ k\Omega$ and from Eq. (12-27) $R_m = \lim_{R_L \to \infty} (R_M)$ is given by Eq. (1) with $R'_c = R' = 3\ k\Omega$, i.e. $R_m = \frac{R'}{R'_c} R_M = \frac{3}{2}(-9.533) =$ -14.30. Thus $R_{of} = R_o/(1+\beta R_m) = 3/(1+14.30/3) =$ $\underline{0.520\ k\Omega} = 520\ \Omega$

$R'_{of} = R_{of} \| 6 = \underline{479\ \Omega}$

Alternatively, from Table 12-4 $R'_{of} = R'_o/D =$ $(R'_c)/D = 2/4.178 = \underline{479\ \Omega}$, as above.

12-28 The equivalent circuit of the amplifier is given below. Since $I_1 = V_1/h_{ie}$ we find

$h_{fe} I_1 = \frac{h_{fe}}{h_{ie}} V_1 = \frac{50}{1.1} V_1$. We write node equations with all currents in mA, as usual. At B we find

$V_s/10 = (\frac{1}{10} + \frac{1}{40} + \frac{1}{1.1})V_1 - \frac{V_o}{40}$ or

$V_s = 10.35\ V_1 - 0.25\ V_o \qquad (1)$

At C we have $0 = (\frac{50}{1.1} - \frac{1}{40})V_1 + (\frac{1}{40} + \frac{1}{4})V_o$ or

$0 = 45.43\ V_1 + 0.275\ V_o \qquad (2)$

Solve for V_1 from (2), $V_1 = -6.05 \times 10^{-3} V_o$. Substituting into (1) we obtain $A_{Vf} = V_o/V_s =$ $\underline{-3.198}$. $R_{if} = V_1/I' = \frac{V_1}{\frac{V_s - V_1}{R_s}} =$

$$\frac{-6.05 \times 10^{-2} V_o}{\frac{V_o}{-3.198} - 6.05 \times 10^{-3} V_o} = 0.190\ k\Omega = \underline{190\ \Omega}$$

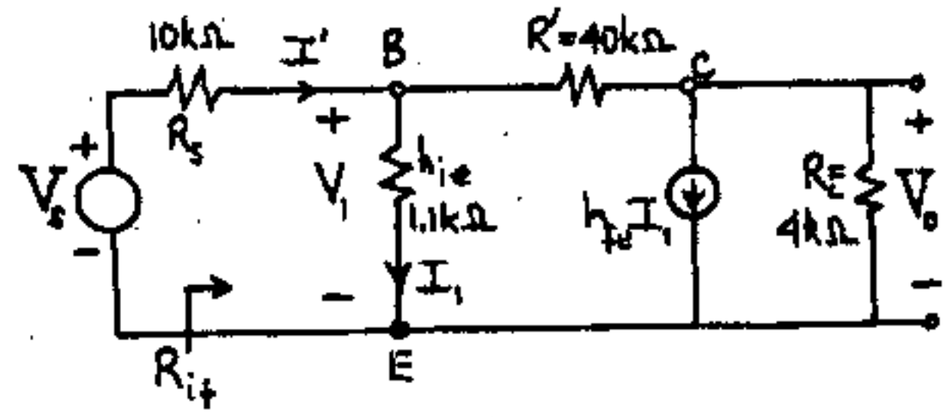

To find R_{of} set $V_s = 0$ and drive the output circuit after removing $R_c = 4\ k\Omega$ (external load) as seen below. We have $R_{of} = V/I$ but $I' = I - h_{fe} I_1 =$ $I - 50\ I_1$ and $I_1 = I' \frac{10}{10+1.1} = 0.901\ I'$. From the output circuit we have $V = 40\ I' + 1.1\ I_1 = 40.99\ I'$ and $I = I' + 50 \times 0.901\ I'$ or $I = 46.06\ I'$. Hence

$V_o = \frac{40.99}{46.06} I$ or $R_{of} = V/I = \underline{890\ \Omega}$ and

$R'_{of} = R_{of} \| R_c = \frac{890 \times 4000}{4{,}890} = 728.0\ \Omega$.

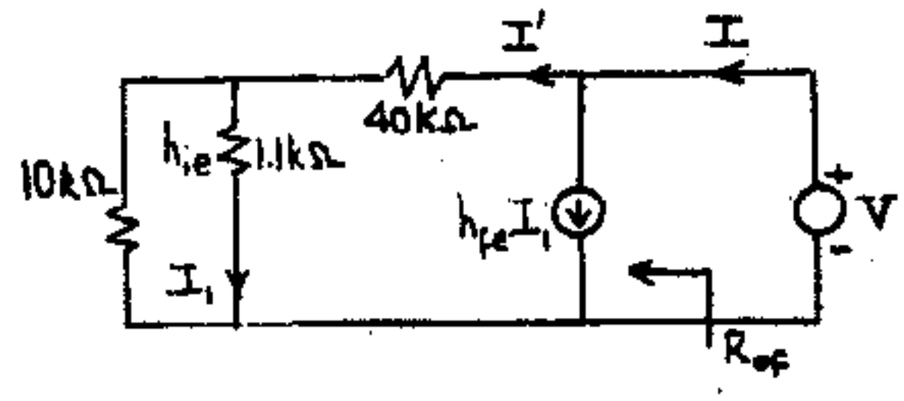

12-29 (a) From Eqs. (12-84) and (12-83)

$$\lim_{R_s \to 0} R_M = \lim_{R_s \to 0} \left(-\frac{h_{fe} R'_c R}{R + h_{ie}}\right) = \lim_{R_s \to 0} \left(-\frac{h_{fe} R'_c R_s}{R_s + h_{ie}}\right) = 0$$

(b) The correct result for A_{Vf} is obtained from Eq. (12-85), namely,

$$A_{Vf} = \lim_{R_s \to 0} \frac{R_{Mf}}{R_s} = \lim_{R_s \to 0} \frac{-h_{fe} R'_c}{R_s + h_{ie}} = -\frac{h_{fe} R'_c}{h_{ie}}$$

This equation can be obtained by inspection of Fig. 12-19b. With $R_s = 0$, $A_{Vf} = V_o/V_s$ is the voltage gain of a CE amplifier with a load $R'_c = R_c \| R'$.

(c) If R_c is considered an external load, the output resistance, neglecting feedback, is $R_o = R' =$ $40\ k\Omega$. Since

$$R_m = \lim_{R_c \to \infty} R_M = \frac{-h_{fe} R' R}{R + h_{ie}} = \frac{(-50)(50)(8)}{8 + 1.1} = \underline{-1{,}760\ k\Omega}$$

because in Eq. (12-70) $\lim_{R_c \to \infty} R_c' = R'$. From Table 12-4 (with $R_o = R'$)

$$R_{of} = \frac{R_o}{1+\beta R_m} = \frac{40}{1+(0.025)(1,760)}\ k\Omega \approx \underline{890\ \Omega}$$

(d) $R_{of}' = R_{of} \| R_c = \frac{(890)(4,000)}{4,890} = \underline{728\ \Omega}$.

This value agrees with that obtained in Sec. 12-12.

12-30 (a) If $h_{fe}=0$, then from Fig. 12-19a,

$$I_f = \frac{V_s}{R_s+R'+R_c}$$

Since $I_f \neq 0$ then the first assumption in Sec. 12-3 is not satisfied.

(b) The output current I_o with the amplifier activated is

$$I_o = \frac{V_o}{R_c} = \frac{A_{Vf}V_s}{R_c}$$

Hence the condition that the forward transmission through the feedback network can be neglected is $|I_o| \gg |I_f|$, or

$$|A_{Vf}| \gg \frac{R_c}{R_s+R'+R_c}$$

Since the voltage gain is at least unity, this inequality is easily satisfied by selecting $R_s+R' \gg R_c$.

CHAPTER 13

13-1 (a) $Y = \sin \omega t$, $x = \sin(\omega t + 10^\circ)$

The plot of y vs. x is a narrow ellipse whose major axis is at 45°. When $x = 0$, $y = \pm \sin 10^\circ = \pm 0.174$; when $y = 0$, $x = \pm 0.174$.

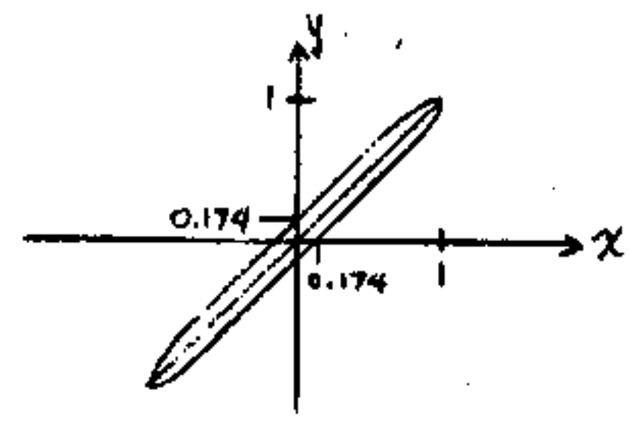

For zero phase shift, $x = y$ which results in a straight line inclined at 45°.

(b) If the phase shift in both amplifiers were the same, then $x = y$ which is a straight line, equivalent to zero phase shift.

13-2

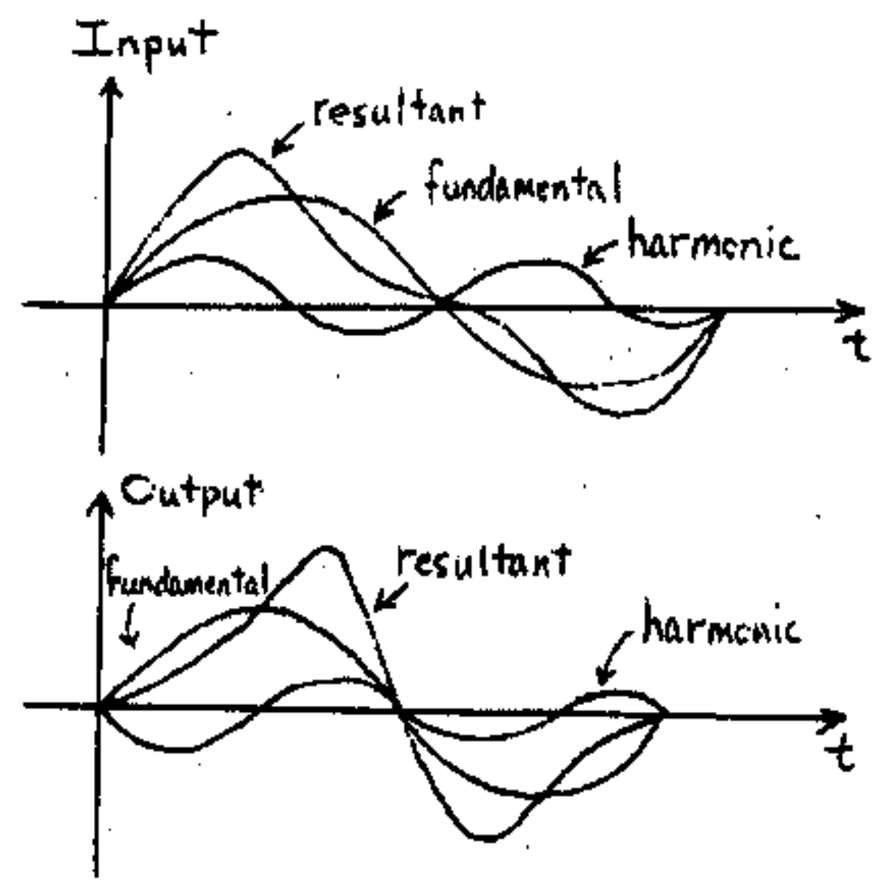

13-3 We are given $f_L = 30$ Hz and $f_H = 15$ kHz. From Eq. (13-4), $\left|\frac{A_L}{A_{Vo}}\right| = \frac{1}{\sqrt{1+f_L^2/f_1^2}}$. The frequency for which the voltage gain is -0.5 dB is given by,

$20\log(1+f_L^2/f_1^2)^{1/2} = 0.5$ or, $1+f_L^2/f_1^2 = 1.12$

Thus $\underline{f_1 = 85.9\ \text{Hz}}$. Similarly, from Eq. (13-6)

$\left|\frac{A_H}{A_{Vo}}\right| = \frac{1}{\sqrt{1+f_2^2/f_H^2}}$. Thus, $20\log(1+f_2^2/f_H^2)^{1/2} = 0.5$ or,

$1+f_2^2/f_H^2 = 1.12$. Thus, $f_2 = \underline{5.2\ kHz}$.

13-4 From Eq. (13-4), $\left|\frac{A_L}{A_{Vo}}\right| = \frac{1}{\sqrt{1+f_L^2/f^2}} = \frac{1}{\sqrt{1+f_L^2/(10f_L)^2}}$ $=0.995$. From Eq. (13-6), $\left|\frac{A_H}{A_{Vo}}\right| = \frac{1}{\sqrt{1+f^2/f_H^2}}$ $= \frac{1}{\sqrt{1+(0.1f_H)^2/f_H^2}} = 0.995$. Thus, for $10f_L \le f \le 0.1f_H$ the gain is constant within 0.5 %.

From Eq. (13-4), $\theta = \arctan f_L/f = \arctan 0.1 \approx 0.1$ rad. From Eq. (13-6), $\theta = -\arctan f/f_H = \arctan 0.1 \approx -0.1$ rad. Thus, for $10 f_L \le f \le 0.1 f_H$, the phase shift is constant within $\pm$ 0.1 rad.

13-5 Assume that $f = af_L$ or $1/T = a/2\pi R_1C_1$ and $T = 2\pi R_1C_1/a$. We now set $t_1 = T/2 = \pi R_1C_1/a$ (see Fig. 13-6).

Notice that, as a decreases, t_1 increases and the approximation of Eq. (13-11) is no longer valid. Thus Eq. (13-10) is used from which

$$V' = Ve^{-t_1/R_1C_1} = V e^{-\pi/a} \quad \text{and}$$

$$P^* = \frac{V-V'}{V} \times 100\% = (1-e^{-\pi/a}) \times 100\%$$

We want to know the value of a for which $\frac{P-P^*}{P} = 10\% = 0.1$ where from Eq. (13-13) $P = (\pi f_L/f) \times 100\% = (\pi/a) \times 100\%$.

Thus we have $1-\frac{P^*}{P} = 0.1$ or $P^* = 0.9\,P$ $1-e^{-\pi/a} = 0.9\,\pi/a$, and, setting $\pi/a = x$ we have to solve $1-e^{-x} = 0.9x$. We obtain the answer $x \approx 0.215$ graphically by plotting $y_1 = 1-e^{-x}$ and $y_2 = 0.9\,x$ and setting $y_1 = y_2$. Hence $\pi/a = 0.215$ or $a = 14.61$ and the approximate formula for P of Eq. (13-13) is in error by more than 10% if the frequency f of the square wave is less than $14.61\ f_L$.

13-6 From Eq. (13-9), $t_r = 0.35/f_H$. From Eq. (13-8), $v_o = V(1-e^{-t/RC})$. Thus,

f_H	t_r, μs.	$v_o(t=10)$
80 MHz	0.0044	V
10 MHz	0.035	V
1 MHz	0.35	V

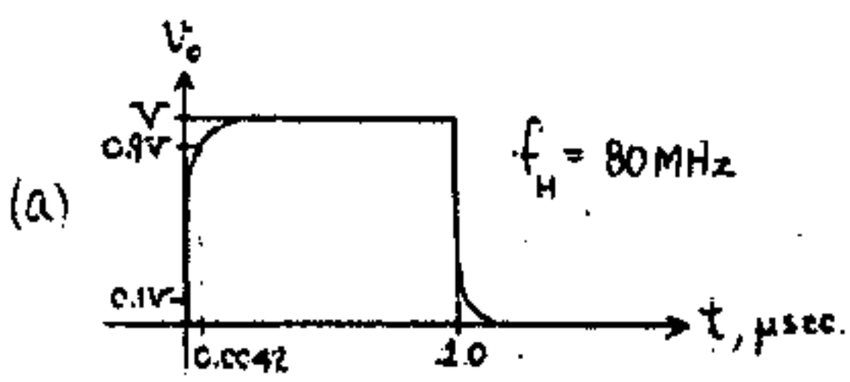

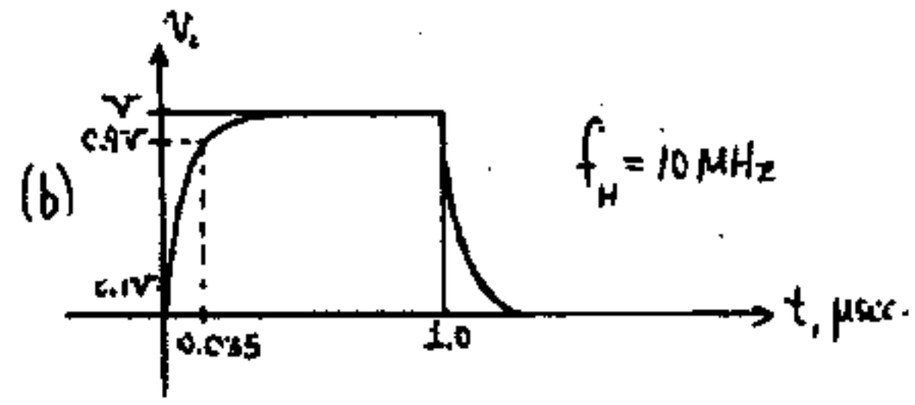

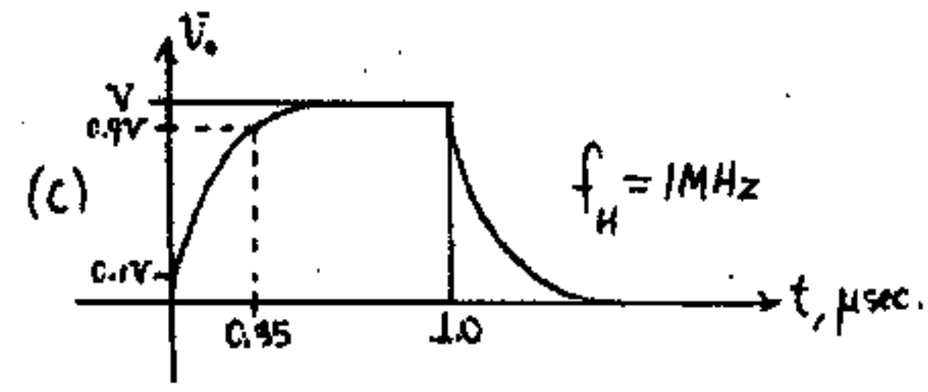

13-7(a) From Fig. 13-2a, $v_i = iR_2 + v_o' = R_2C_2\frac{dv_o'}{dt} + v_o'$ where v_o' is the voltage across C. If an amplifier of midband gain A_o is underconsideration then $v_o = Av_o'$ where v_o is the amplifier output.

Hence, $\frac{dv_o}{dt} + \frac{v_o}{R_2C_2} = \frac{A_ov_i}{R_2C_2}$. For the first stage, $v_{i1} = u(t)$. Thus, $v_{o1} = A_o(1-e^{-t/R_2C_2})u(t)$.

Now let $v_{o1} = v_{i2}$. Thus, for the second stage,

$$\frac{dv_{o2}}{dt} + \frac{v_{o2}}{R_2C_2} = \frac{A_o^2}{R_2C_2}(1-e^{-t/R_2C_2})$$

The general solution to this equation is, $v_{o2} = A_o^2(1-e^{-t/R_2C_2}) + Bte^{-t/R_2C_2}$. Thus, $v_{o2} = A_o^2[1-(1+t/R_2C_2)e^{-t/R_2C_2}]$. If $x = t/RC$,

$$v_{o2} = A_o^2[1-(1+x)e^{-x}]$$

(b) If $t \ll RC$, then $x \ll 1$ and $e^{-x} \approx 1-X+\frac{x^2}{2}-\ldots$

By substitution, $v_{o2} = A_o^2[1+(1+X)(1-X+\frac{x^2}{2})]$

$$= A_o^2[1-(1-X^2)-(1+X)\frac{x^2}{2}]$$

$$= A_o^2[X^2-\frac{x^2}{2}-\frac{x^3}{2}] = \frac{A_o^2x^2}{2}$$

13-8 The time t_1 at which $v_o = 0.1\,A_o^2$ is found from $0.1A_o^2 = A_o^2[1-(1+x_1)e^{-x_1}]$ where $x_1 = t_1/RC$ from which $x_1 = 0.532$ (trial and error) or $t_1 = 0.532$ RC. The time t_2 at which $v_o = 0.9\,A_o^2$ is found from $0.9A_o^2 = A_o^2[1-(1+x_2)e^{-x_2}]$ from which $x_2 = 3.89$ or $t_2 = 3.89$ RC. Hence $t_r = t_2 - t_1 = 3.358$ RC. Thus, since $f_H = 1/2\pi RC$,

$$t_r = \frac{3.358}{2\pi f_H} = 0.534/f_H.$$

<u>Interpretation</u>: The rise time of the two-stage amplifier is larger than that of a single-stage amplifier. This is because the second stage (which accepts the waveform of Fig. 13-4 as input) further delays the rise of the 2-stage output to its final value.

13-9 (a) The equivalent circuit model is

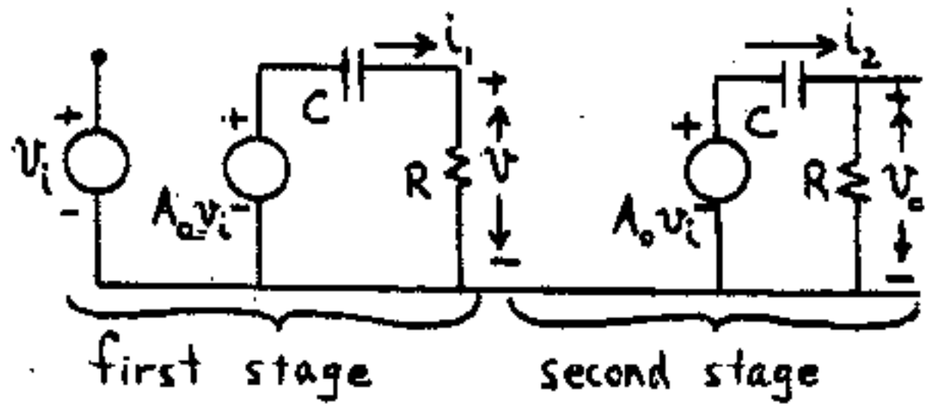

The differential equation governing the first stage is

$$C\frac{d}{dt}[A_o v_i - v] = i_1 = \frac{v}{R} \quad \text{or} \quad \frac{dv}{dt} + \frac{v}{RC} = A_o\frac{d}{dt}v_i \quad (1)$$

For a unit step input $v_i = u(t)$, the output v is given by

$$v = A_o e^{-t/RC} u(t)$$

Now this waveform becomes the input to the second stage, for which

$$\frac{dv_o}{dt} + \frac{v_o}{RC} = A_o\frac{d}{dt}(A_o e^{-t/RC}u(t)) = -\frac{A_o^2}{RC}e^{-t/RC}u(t) \quad (2)$$

v_o is of the form $A\epsilon^{-t/RC} + Bt\epsilon^{-t/RC}$. Substituting in (2) we find $B = \frac{-A^2}{RC}$ and A is arbitrary. Since at $t = 0$ the voltage on the capacitors are zero than $v_o = A_o^2$. Hence $A = A_o^2$

$$\text{or} \quad v_o = A_o^2(1-\frac{t}{RC})e^{-t/RC} = A_o^2(1-x)e^{-x} \quad (3)$$

where $x = t/RC$

(b) The percent tilt P is evaluated at $t = T/2$, for which $x = T/2RC$ is very small

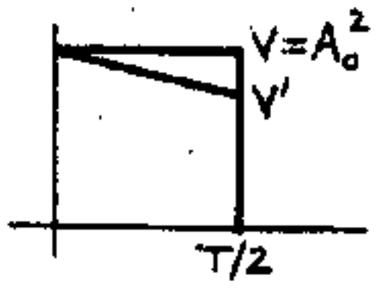

For small x, $e^{-x} = 1 - x + \frac{x^2}{2!} - \frac{x^3}{3!} + \ldots \approx 1 - x + \frac{x^2}{2}$

and $V' \approx A_o^2(1-x)(1-x+x^2/2) = A_o^2(1-2x+x^2+x^2/2-x^3/2)$ $\approx A_o^2(1-2x)$. Finally $P = \frac{V-V'}{V} \times 100\% \approx \frac{A_o^2 - A_o^2(1-2x)}{A_o^2}$ $\times 100\% = 2x \times 100\% = \frac{T}{RC} \times 100\%$.

Note that the tilt is twice that of a single stage.

13-10 (a) From Eq. (13-17), $\frac{1}{C_1} = \frac{1}{C_b} + \frac{1+h_{fe}}{C_x}$

$= \frac{1}{100} + \frac{101}{100} = \frac{102}{100}$, or, $C_1 = 0.98\ \mu F$.

From Eq. (13-19), $|A_o| = \frac{h_{fe}R_c}{R_s + h_{ie}} > A_{min} = 160$ or $R_s < \frac{h_{fe}R_c}{A_{min}} - h_{ie}$ (1). Thus, $R_s < \frac{100 \times 3}{160} - 1 = 875\ \Omega$. From Eq. (13-21), $f_L = 1/2\pi C_1(R_s + h_{ie})$ $< f_{L,max}$ or $R_s > \frac{1}{2\pi C_1 f_{L,max}}$ (2).

Thus, $R_s > \frac{1}{2\pi \times 0.98\times10^{-6} \times 90} - 10^3 = 804\ \Omega$. Thus $804\ \Omega < R_s < 875\ \Omega$

(b) From (1), $R_s < \frac{100 \times 3}{165} - 1 = 818\ \Omega$

From (2), $R_s > \frac{1}{2\pi \times 0.98\times10^{-6} \times 85} - 10^3 = 911\ \Omega$

Thus, $911\ \Omega < R_s < 818\ \Omega$ which is impossible.

13-11 (a) From Fig. 13-8b, with C_b very large, we have $V_o = -I_b h_{fe} R_c = \frac{-V_s h_{fe} R_c}{R_s + h_{ie} + Z_e'}$, where Z_e' is given by Eq. (13-15). Thus, substituting Eq. (13-15) into the above Eq. and solving for the voltage gain gives, $A_V = \frac{V_o}{V_s} = \frac{-h_{fe}R_c}{R+R'} \times \frac{1+j\omega C_x R_e}{1+j\omega C_x[R_e R/R+R']}$ where R and R' are as given.

Thus, dividing A_V by the given A_o gives,

$\frac{A_V}{A_o} = \frac{1}{1+\frac{R'}{R}} \times \frac{1+j\omega C_x R_e}{1+j\omega C_x[R_e R/R+R']}$ Using the given expressions for f_o, f_p and B and $\omega = 2\pi f$ gives

$$\frac{A_V}{A_o} = \frac{1}{1+\frac{R'}{R}} \times \frac{1+jf/f_o}{1+jf/f_p}$$

(b) $\frac{A_V}{A_o} = \frac{1}{B} \times \frac{1+jf/f_o}{1+jf/f_p} = \frac{1+jf/f_o}{B+jf/f_o}$. The 3dB frequency is that frequency at which $\frac{A_V}{A_o}$ drops to $1/\sqrt{2}$. Thus, $\left|\frac{A_V}{A_o}\right|^2 = \frac{1+f^2/f_o^2}{B^2+f^2/f_o^2} = \frac{1}{2}$

Solving for f gives, $f = f_o\sqrt{B^2-2} = \sqrt{B^2-2}/2\pi C_x R_e$

If $B^2 < 2$ then the numerator becomes imaginary. Thus, the 3dB frequency does not exist; in other words, the gain does not fall as much as 3 dB even at $f = 0$.

(c) If $B^2 >> 2$, then $f \approx B/2\pi C_x R_e = Bf_o = f_p$

(d) The mangitude of $|A_V/A_o|$ in decibels is given by

$$20\log\left|\frac{A_V}{A_o}\right| = -20\log(1+\frac{R'}{R}) + 20\log\sqrt{1+(\frac{f}{f_o})^2} - 20\log\sqrt{1+(\frac{f}{f_p})^2}$$

The first term represents a horizontal line, the second term has an asymptote passing through $f = f_o$ with a positive slope of 6 dB per octave, and the third term has an asymptote passing through $f = f_p$, with a negative slope of the same magnitude.

These lines are shown dashed in Fig. 1, and the idealized Bode plot is obtained by adding the three asymptotes together to form the shaded-broken-line continuous curve. The amplitude response curve for the amplifier of Fig. 13-8 is plotted in Fig. 2. For example, assuming $R_s = 0$, $R_e = 1K$, $C_s = 100\ \mu F$, $h_{fe} = 50$, $h_{ie} = 1.1$ K, and $R_c = 2$ K, we find $f_o = 1.6$ Hz and $f_p = 76$ Hz.

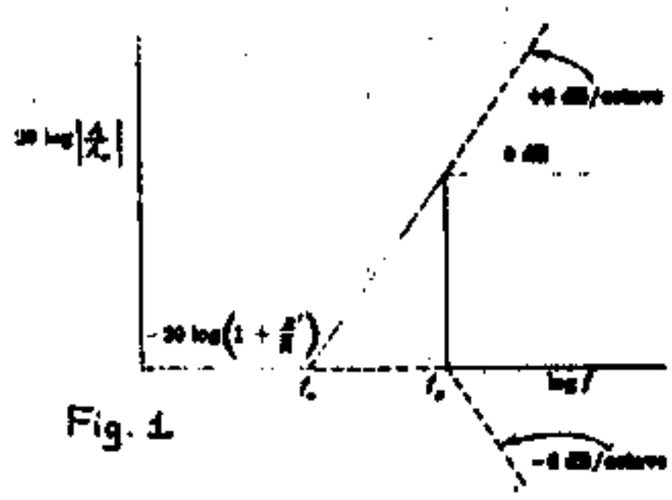

Fig. 1

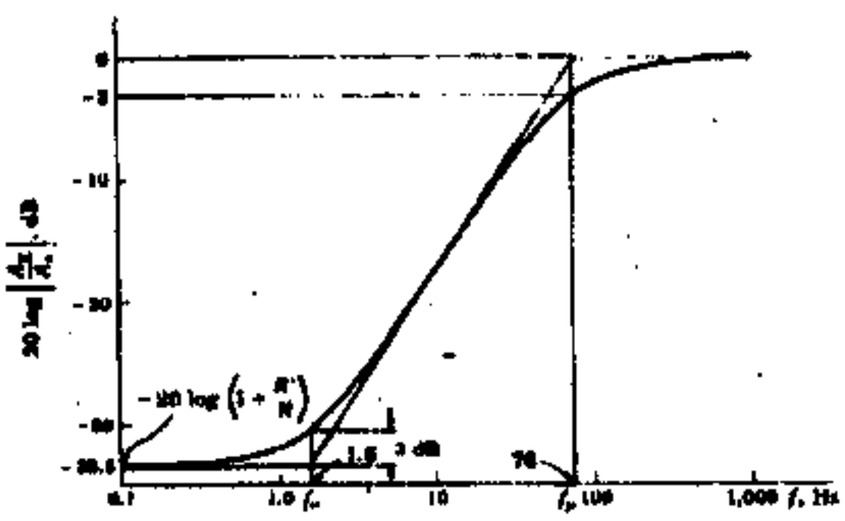

Fig. 2 The frequency response of an amplifier with a bypassed emitter resistor. The numerical values correspond to the component values given above.

13-12 (a) The equivalent circuit is

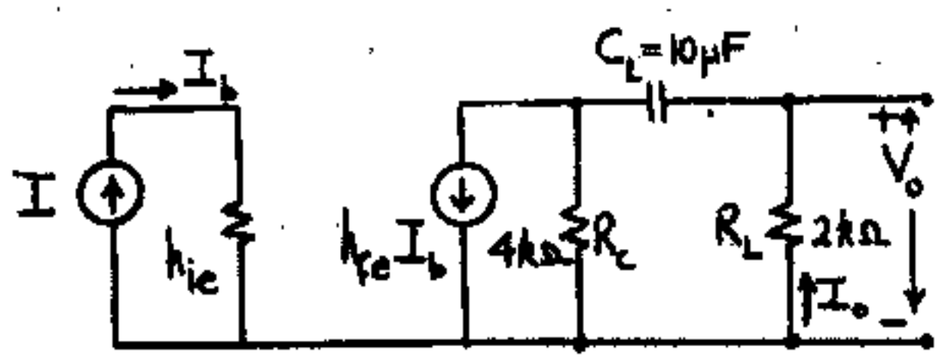

$V_o = -R_L I_o = \dfrac{-R_L R_c}{R_c + R_L + 1/sC} h_{fe} I_b$. By letting $R = R_c + R_L$

$V_o = \dfrac{-R_L R_c h_{fe}}{R + 1/sC} I_b = -\dfrac{(R_L R_c/R) h_{fe}\, s}{s + 1/RC} I_b$

$\dfrac{V_o}{I_b} = \dfrac{A_o s}{s + 1/RC}$ which is of the form of Eq. (13-1)

Hence $f_L = 1/2\pi RC = 1/2\pi C(R_c + R_L)$

$$f_L = \frac{1}{2\pi \times 10^{-5} \times 6 \times 10^3} = 2.65 \text{ Hz}$$

(b) From Eq. (13-13) $P = \dfrac{\pi f_L}{f} \times 100\% = \dfrac{\pi \times 2.65}{200} \times 100\% = \underline{4.16\%}$

(c) $f = \pi \times 2.65 \times 100/2 = \underline{416 \text{ Hz}}$

13-13 (a) From Eq. (13-21), $f_L = 1/2\pi C_b (R_o' + R_i')$

$= 1/2\pi \times 5 \times 10^{-6} \times (3 \times 10^3 + 2 \times 10^3) = \underline{6.37 \text{ Hz}}$

(b) From Eq. (11-3), $\left|\dfrac{A}{A_o}\right| = 1\Big/\sqrt{1 + (f_L/f)^2}$ or

$$20 \log \left|\frac{A}{A_o}\right| = -10 \log[1 + (f_L/f)^2] = -12$$

Hence, for $f_L = 6.37$ Hz, $\underline{f = 1.65 \text{ Hz}}$

13-14 (a) The equivalent circuit of the given stage is indicated. Since $r_d \gg R_L + R_s$ it can be neglected. Let $Z_s = R_s \| \dfrac{1}{j\omega C_s} = \dfrac{R_s}{1 + j\omega R_s C_s}$.

Then we have $V_{gs} = -g_m V_{gs} Z_s + V_s$ or $V_{gs} = \dfrac{V_s}{1 + g_m Z_s}$

But $V_o = -g_m V_{gs} R_L = \dfrac{-g_m R_L}{1 + g_m Z_s} V_s$ hence

$$A_v = \frac{V_o}{V_s} = -\frac{g_m R_L}{1 + \dfrac{g_m R_s}{1 + j\omega R_s C_s}} = \frac{-g_m R_L (1 + j\omega R_s C_s)}{1 + g_m R_s + j\omega R_s C_s} =$$

$\dfrac{-g_m R_L}{(1 + g_m R_s)} \dfrac{(1 + j\omega R_s C_s)}{\left(1 + j\dfrac{\omega R_s C_s}{1 + g_m R_s}\right)}$. Since the midband gain (for $\omega \to \infty$) is $-g_m R_L$, then $\dfrac{A_v}{A_o} = \dfrac{1}{1 + g_m R_s} \dfrac{1 + j f/f_o}{1 + j f/f_p}$

where $f_o = \dfrac{1}{2\pi C_s R_s}$ and $f_p = \dfrac{1 + g_m R_s}{2\pi C_s R_s}$

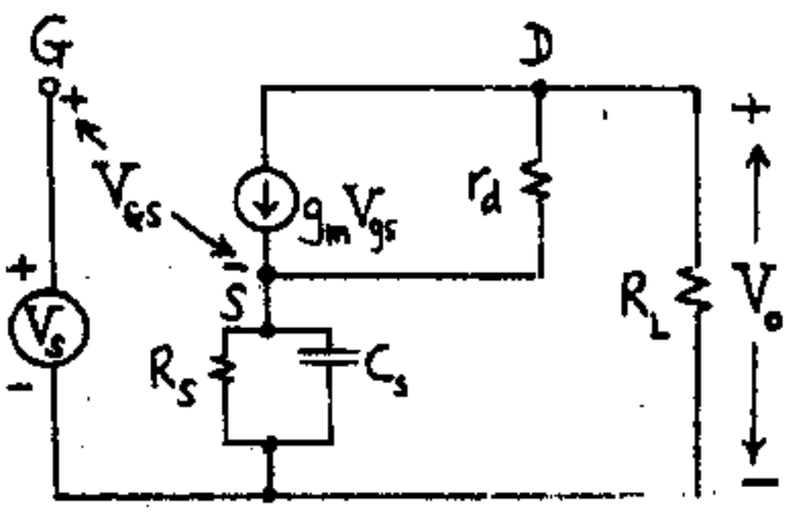

(b) From Eq. (13-13) $P = \dfrac{\pi f_p}{f} \times 100$. If $g_m R_s \gg 1$ then, $f_p = \dfrac{1 + g_m R_s}{2\pi C_s R_s} \approx \dfrac{g_m}{2\pi C_s}$

Thus, $P = 10 = \pi g_m \times 100/2\pi C_s f$, or,

$C_s = \dfrac{3 \times 100}{2 \times 60 \times 10} = \underline{250\ \mu F}$

13-15 (a)

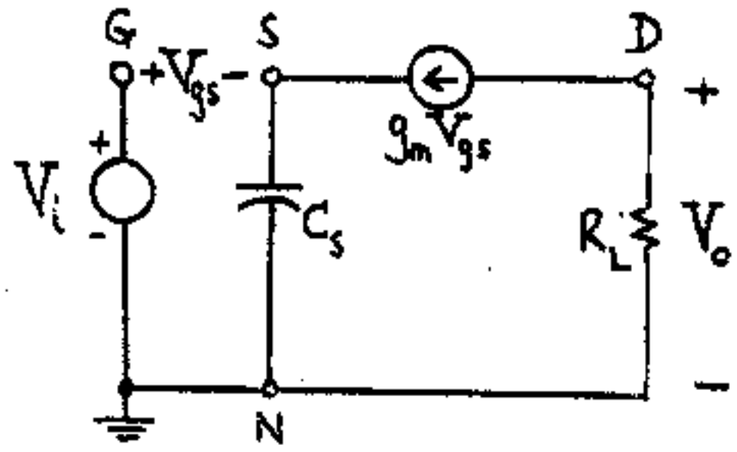

Omitting R_s and r_d from the circuit, we obtain the above network $V_{gs}=V_i-V_{sn}=V_i-g_mV_{gs}/sC_s$

$V_{gs}=\dfrac{V_i}{1+g_m/sC_s}$. $V_o=-g_mV_{gs}R_L$. $A=\dfrac{V_o}{V_i}=$

$\dfrac{-g_mR_L}{1+g_m/sC_s}=\dfrac{-g_mR_L(S-0)}{S+g_m/C_s}$. The zero is O and the pole is $g_m/2\pi C_s$. Since $A=\dfrac{-g_mR_L}{1-jg_m/2\pi C_sf}=$

$\dfrac{-g_mR_L}{1-jf_L/f}$ then $A_o=-g_mR_L$ and $f_L=g_m/2\pi C_s$

(b)

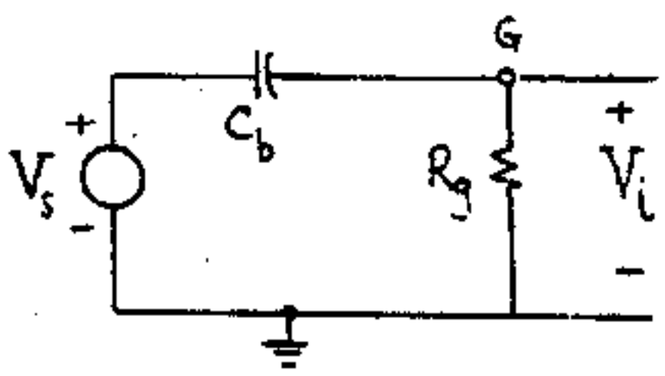

The input is now $V_i=\dfrac{V_sR_g}{R_g+1/sC_b}=\dfrac{V_ss}{S+1/R_gC_b}$

$A=V_o/V_s=\dfrac{V_o}{V_i}\times\dfrac{V_i}{V_s}=\dfrac{-g_mR_Ls}{s+g_m/C_s}\times\dfrac{S}{S+1/R_gC_b}$

where the value of V_o/V_i is taken from part (a). Note that there is no interaction between the blocking and bypass capacitors, as there is in the case of the BJT amplifier (where C_z is reflected as a capacitance $C_z/(1+h_{fe})$ in series with C_b). Each zero is o. One pole is $g_m/2\pi C_s$ as in part (a). The other pole is $1/2\pi R_gC_b$.

13-16 Here f_L is given by Eq. (13-21) with C_1, h_{ie} and R_s replaced by C_b, R_i' and R_o', respectively. That is

$$f_L=[2\pi C_b(R_o'+R_i')]^{-1}=1/2\pi C_bR'$$

Now $\left|\dfrac{A}{A_o}\right|=\dfrac{1}{[1+(f_L/f)^2]^{1/2}}$ and we want

$|A/A_o|=0.95$ at $f=60$. Thus $(0.95)^2=\dfrac{1}{1+(f_L/60)^2}$

or $f_L=19.72$ Hz. Thus $1/2\pi C_bR'=19.72$ or

$C_b=0.00807/R'=\dfrac{.00807}{R'\times(10^{-3}\,k\Omega/\Omega)}=\dfrac{8.07}{R'}\times10^{-6}F=$

$\dfrac{8.07}{R'}\,\mu F$ Q.E.D.

13-17 (a) $R_{L2}=1.5\ k\Omega$, $R_{i2}=h_{ie}=2\ k\Omega$, $A_{i2}=-h_{fe}=-100$

From Table 11-4, $A_{V2}=\dfrac{-h_{fe}R_{L2}}{h_{ie}}=\dfrac{-100\times1.5}{2}=-75$

(b) From Eq. (13-21), $f_L=1/2\pi C_b(R_o'+R_i')$ where $R_o'=1.5\ k\Omega$ and $R_i'=h_{ie}\|60\|60=2\|30=1.875\ k\Omega$

Thus, $C_b=1/2\pi\times10\times(1.5+1.875)=\underline{4.72\ \mu F}$

(c) From Eq. (13-13), $P=\dfrac{\pi f_L}{f}\times100\%$. Thus, $f_L\le\dfrac{5\times200}{\pi\times100}\le\dfrac{10}{\pi}$. Hence, from Eq. (13-21),

$C_b\ge\dfrac{1}{2\times10\times(1.5+1.875)}=\underline{14.81\ \mu F}$

13-18 (a)

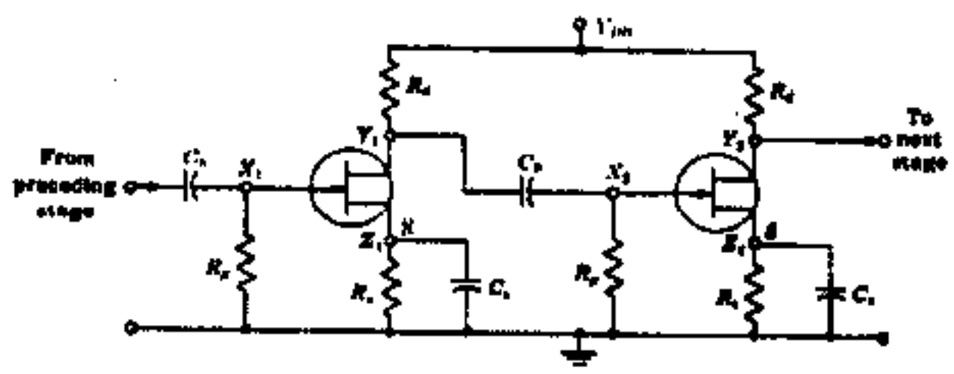

(b) For any stage except the first, the equivalent circuit is, from Fig. 11-27,

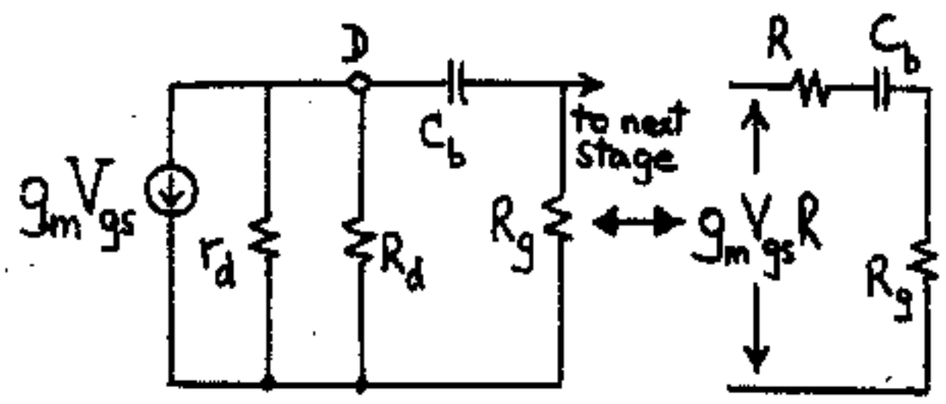

where V_{ge} is the gate-to-source voltage at the previous stage. This is of the form of Fig. 13-1 where the resistance in series with $C_b=C_1$ is $R_1=R_g+R$ where $R=r_d\|R_d$. Hence, $f_L=1/2\pi R_1C_1$ $=1/2\pi C_b(R_g+R)$. For the first stage, the left-hand side of C_b goes to the signal-source resistance.

(c) $R=R_d\|r_d=12\|5=3.53\ k\Omega$

$R_g=0.5\ M\Omega=500\ k\Omega$.

From Eq. (13-4), $\left|\frac{A}{A_o}\right| = 1/\sqrt{1+(f_L/f)^2}$ or

$20 \log \left|\frac{A}{A_o}\right| = -10\log[1+(f_L/f)^2]$. For the given specifications, $-0.5 = -10 \log[1+(f_L/20)^2]$ or

$f_L = 6.99$ Hz. Thus, from the result of part (a)

$C_b = 1/2\pi \times 6.99 \times (3.53+500) \times 10^3 F = 45.2$ nF $= 0.0452\ \mu F$

(d) For two stages, $-20\log[1+(f_L/f)^2] = -0.5$. If $f = 20$ Hz, $f_L = 4.9$ Hz. Thus,

$C_b = 1/2\pi \times 4.9 \times (3.53+500) \times 10^3 F = 64.5$ nF $= 0.0645\ \mu F$

(e) At midband, $A_{o1} = A_{o2} = -g_m R = -5 \times 3.53 = -17.65$. Thus, $A_o = A_{o1} \times A_{o2} = \underline{311.52}$

13-19 (a) $|A_o| = g_m R$ where $R = r_d \| R_d = 8 \| 10 = 4.44$ kΩ

Thus, $|A_o| = 3 \times 4.44 = 13.32$. Converting this to dB gives, $20 \log 13.32 = 22.49$ dB

Thus, the overall midband gain for three stages is $3 \times 22.49 = \underline{67.47 \text{ dB}}$

(b) Proceeding as in the preceeding problem we obtain $f_L = \frac{1}{2\pi(R_g+R)C_b} = \frac{1}{2\pi(4.44+200)\times 10^3 \cdot 0.005\times 10^{-6}}$

$= 155.7$ Hz

13-20 From Eq. (11-67), $g_m = \frac{|I_c|}{26} = \frac{5 \text{ mA}}{26 \text{ mV}} = \underline{192 \text{ mA/V}}$

$r_{b'e} = \frac{h_{fe}}{g_m} = \frac{100}{0.192} = \underline{521\ \Omega}$

$r_{bb'} = h_{ie} - r_{b'e} = 1000 - 521 = \underline{479\ \Omega}$

$r_{b'c} = \frac{r_{b'e}}{h_{re}} = \frac{521}{10^{-4}}\ \Omega = \underline{5.21\ M\Omega}$. $g_{ce} = h_{oe} - (1+h_{fe})g_{b'c}$

$= 4\times 10^{-5} - 101 \times 1.92 \times 10^{-7} = \underline{2.06\times 10^{-5} \text{ A/V}}$. Thus,

$r_{ce} = 1/g_{ce} = 48.51$ kΩ

From Eq. (13-28), $C_e \approx g_m/2\pi f_T = 192\times 10^{-3}/2\pi \times 10 \times 10^6 F = \underline{3.06 \text{ nF}}$

$C_{ob} = C_c = \underline{2 \text{ pF}}$.

13-21 From Eq. (13-28) $C_e \approx g_m/2\pi f_T$. From Eqs. (13-22) and (13-27), $C_e \approx C_{De} = g_m W^2/2D_B$ (1).

Substituting (1) into Eq. (13-28) gives, $W^2 = D_B/\pi f_T$

For a p-n-p transistor $D_B = D_P = 13$ cm^2/sec., from Table (1-1). Hence, $W^2 = 13/\pi \times 300 \times 10^6 = 1.38 \times 10^{-8}$ cm^2, or, $\underline{W = 1.17\times 10^{-4} \text{ cm}} = \underline{117\ \mu m}$

13-22 (a) From Eqs. (13-22) and (13-27), $C_e \approx C_{De} = g_m W^2/2D_B$. From Table (1-1), $D_B = 47$ cm^2/sec.

Since $g_m = \frac{I_E}{V_T}$, $C_e = \frac{I_E W^2}{V_T 2D_B} = \frac{(2\times 10^{-4})^2 \times 1.5 F}{26 \times 2 \times 47}$

$= \underline{24.5 \text{ pF}}$

(b) From Eq. (13-28), $C_e \approx g_m/2\pi f_T = I_E/V_T \times 2\pi \times f_T$

Thus, $f_T \approx 1.5/26\times 2\pi \times 24.5\times 10^{-12}$ Hz $= \underline{374.8 \text{ MHz}}$

13-23 From Eq. (13-32), $|A_{ie}| = \frac{h_{fe}}{\sqrt{1+(f/f_\beta)^2}}$ or

$20 = \frac{100}{\sqrt{1+(5/f_\beta)^2}}$. Thus, $f_\beta = \underline{1.02 \text{ MHz}}$.

From Eq. (13-34), $f_T \approx h_{fe} f_\beta = 100 \times 1.02 = \underline{102 \text{ MHz}}$

From Eq. (13-34), $C_e \approx g_m/2\pi f_T = I_c/V_T 2\pi f_T$

$= 3/26 \times 2 \times \pi \times 102 F = \underline{180 \text{ pF}}$.

From Eq. (11-67), $r_{b'e} = h_{fe}/g_m = h_{fe} V_T/I_c = 100 \times 26/3$ $= \underline{866.7\ \Omega}$. From Eq. (11-67), $r_{bb'} = h_{ie} - r_{b'e} =$ $1100 - 866.7 = \underline{233.3\ \Omega}$

13-24 (a)

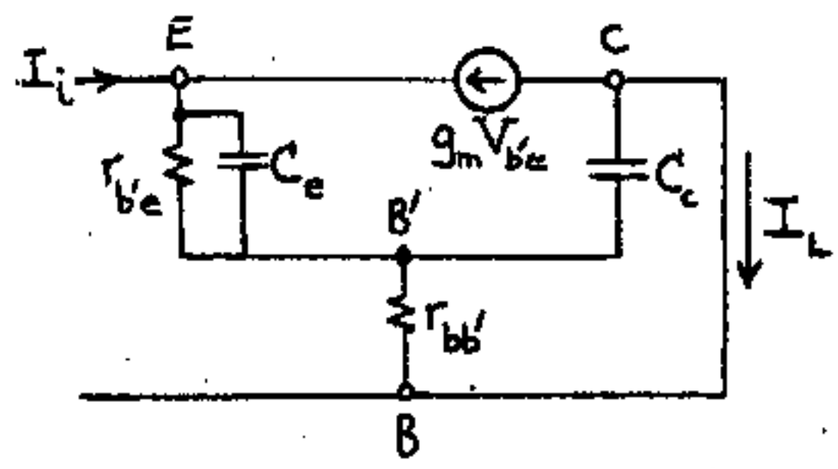

Since $C_e \gg C_c$ and $r_{b'e} \gg r_{bb'}$ then $r_{b'e}C_c \gg r_{bb'}C_c$. Hence, the output time constant may be neglected. In other words C_c may be removed from the circuit.

(b) $A_{ib} = \frac{I_L}{I_i}$. $I_L = -g_m V_{b'e}$. $V_{b'e} = \frac{-I_i - g_m V_{b'e}}{g_{b'e} + j\omega C_e}$.

Thus, $V_{b'e} = \frac{-I_i}{g_m + g_{b'e} + j\omega C_e}$. Hence, $A_{ib} =$

$g_m/g_m + g_{b'e} + j\omega C_e$. Since $g_m = h_{fe}/r_{b'e}$,

$$A_{ib} = \frac{h_{fe}/r_{b'e}}{(h_{fe}/r_{b'e}) + (1/r_{b'e}) + j\omega C_e} = \frac{h_{fe}}{h_{fe} + 1 + j\omega C_e r_{b'e}}.$$

$$= \frac{h_{fe}/(1+h_{fe})}{1+(j2\pi f C_e r_{b'e}/1+h_{fe})} = \frac{\alpha_o}{1+(jf/f_\alpha)}.$$

where $\alpha_o = \frac{h_{fe}}{1+h_{fe}}$ and $f_\alpha = \frac{1+h_{fe}}{2\pi C_e r_{b'e}}$

$\therefore f_\alpha = \frac{h_{fe}}{\alpha_o} \frac{1}{2\pi C_e r_{b'e}} = \frac{g_m}{2\pi C_e \alpha_o}$

From Eq. (13-34) $f_\beta = \frac{g_m}{2\pi C_e h_{fe}}$. $\therefore f_\alpha = \frac{h_{fe} f_\beta}{\alpha_o}$.

Since $\alpha_o(1+h_{fe}) = h_{fe}$, $\frac{\alpha_o}{1-\alpha_o} = h_{fe}$ and $f_\alpha = \frac{f_\beta}{1-\alpha_o}$

13-25 (a)

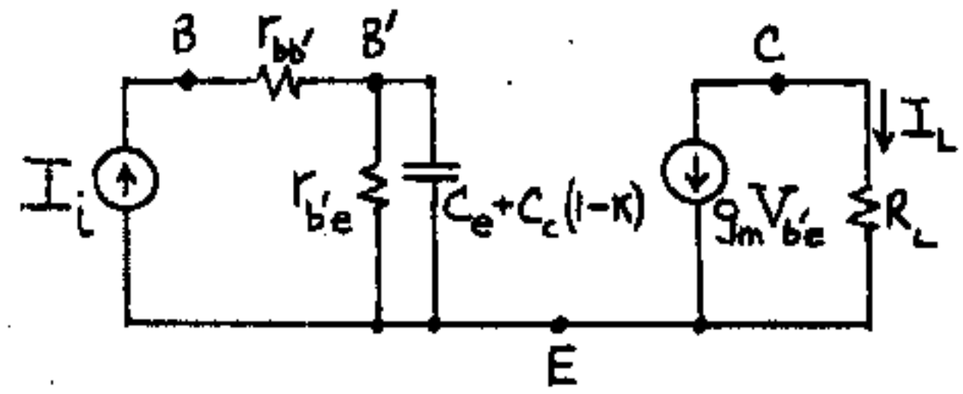

Note: $C_c \times (K-1)/K \approx C_c$ (since $|K| \gg 1$) of the collector circuit is neglected because the output time constant $C_c R_L \ll r_{b'e}[C_e + C_c(1-K)] =$ input time constant. At midband, $I_L = -g_m V_{b'e} = -g_m I_1 r_{b'e}$. Thus, $A_{I_o} = \frac{I_L}{I_1} = -g_m r_{b'e} = -h_{fe}$

(b) $I_L = -g_m V_{b'e} = \frac{-g_m I_1}{g_{b'e} + j\omega C}$ where $C = C_e + C_c(1-K)$

$= C_e + C_c(1+g_m R_L)$ because $K = \frac{V_{ce}}{V_{b'e}} = -g_m R_L$.

$A_I = \frac{I_L}{I_1} = \frac{-g_m}{g_{b'e} + j\omega C} = \frac{-h_{fe}}{1 + j\omega C r_{b'e}}$ because

$g_m = h_{fe}/r_{b'e}$ $\therefore A_I = \frac{h_{fe}}{1 + jf/f_H}$ where

$f_H = \frac{1}{2\pi C r_{b'e}} = \frac{g_{b'e}}{2\pi C}$

(c) $|A_{I_o} f_H| = h_{fe} g_{b'e}/2\pi[C_e + C_c(1+g_m R_L)] =$

$g_m/2\pi[C_e + C_c(1+g_m R_L)]$ From Eq. (13-34),

$f_T \approx h_{fe} f_\beta = g_m/2\pi(C_e + C_c)$. Thus,

$$|A_{I_o} f_H| = \frac{f_T(C_e + C_c)}{[C_e + C_c(1+g_m R_L)]} = \frac{f_T}{1 + [C_c g_m R_L/(C_e + C_c)]}$$

$$= \frac{f_T}{1 + 2\pi f_T C_c R_L}$$

13-26 (a) Replacing I_1 in parallel with R_s by its Thevenin's equivalent gives the following equivalent circuit:

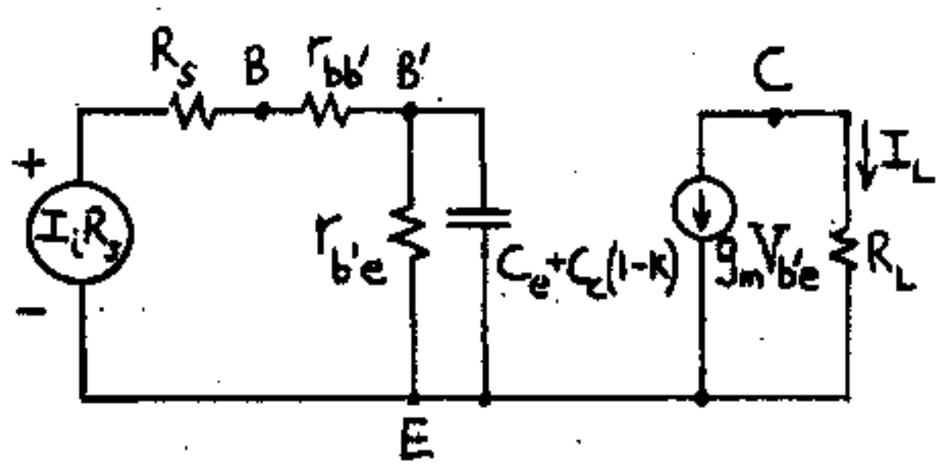

Note; $C_c(K-1)/K$ of the collector circuit is neglected for the reason given in Prob. 13-25. At midband, $V_{b'e} = \frac{I_1 R_s r_{b'e}}{R_s + r_{bb'} + r_{b'e}}$. From Eq. (11-67), $r_{bb'} + r_{b'e} = h_{ie}$ and, $h_{fe} = g_m r_{b'e}$. Thus, $V_{b'e} = \frac{I_1 R_s h_{fe}}{(R_s + h_{ie}) g_m}$. $A_{I_{so}} = \frac{I_L}{I_1} = \frac{-g_m V_{b'e}}{I_1} = \frac{-h_{fe} R_s}{R_s + h_{ie}}$

(b) $V_{b'e} = \frac{I_1 R_s Z_{b'e}}{R_s + r_{bb'} + Z_{b'e}}$

$$A_I = \frac{I_L}{I_1} = \frac{-g_m V_{b'e}}{I_1} = \frac{-g_m R_s}{\frac{R'_s}{Z_{b'e}} + 1} = \frac{-g_m R_s G'_s}{g_{b'e} + j\omega C + G'_s}$$

where $R'_s = R_s + r_{bb'} = 1/G'_s$ and $C = C_e + C_c(1-K) = C_e + C_c(1+g_m R_L)$

$$A_I = \frac{-g_m R_s G'_s}{G'_s + g_{b'e}} \frac{1}{1 + \frac{j\omega C}{G'_s + g_{b'e}}} = \frac{A_{I_{so}}}{1 + jf/f_H}$$

where $f_H = \frac{G'_s + g_{b'e}}{2\pi C} = \frac{1}{2\pi R C}$

where $R = \frac{1}{G'_s + g_{b'e}} = R'_s \| r_{b'e}$

Incidentally, note that $A_{I_{so}} = \frac{-g_m R_s G'_s}{G'_s + g_{b'e}} = \frac{\frac{-h_{fe} R_s}{r_{b'e}}}{1 + \frac{g_{b'e}}{G'_s}}$

$A_{I_{so}} = \frac{-h_{fe} R_s}{r_{b'e} + R_s + r_{bb'}} = \frac{-h_{fe} R_s}{h_{ie} + R_s}$ as in part a.

(c) $|f_H A_{I_{so}}| = \frac{h_{fe} R_s (r_{b'e} + R_s + r_{bb'})}{(R_s + h_{ie}) 2\pi[C_e + C_c(1+g_m R_L)] r_{b'e}(R_s + r_{bb'})}$

Recall, $h_{fe} = g_m r_{b'e}$. From Eq. (13-34), $f_T \approx h_{fe} f_\beta = g_m/2\pi(C_e + C_c)$. Thus, $|f_H A_{I_{so}}| =$

$$\frac{g_m}{2\pi[C_e + C_c(1+g_m R_L)]} \times \frac{R_s}{R_s + r_{bb'}} = \frac{f_T \cdot 2\pi(C_e + C_c)}{2\pi[C_e + C_c(1+g_m R_L)]}$$

$$\times \frac{R_s}{R_s + r_{bb'}} = \frac{f_T}{1 + [C_c g_m R_L/(C_e + C_c)]}$$

$$\times \frac{R_s}{R_s + r_{bb'}} = \frac{f_T}{1 + 2\pi f_T R_L C_c} \times \frac{R_s}{R_s + r_{bb'}}.$$

13-27 (a) There is 1 independent energy storing element (the capacitor). Thus, 1 pole. $A_V = \frac{V_o}{V_s} \to \frac{1}{S^0}$ as $S \to \infty$. Thus the number of zeros = number of poles = 1.

(b) 1 independent capacitor, thus there is 1 pole $A_V = \frac{V_o}{V_s} \to \frac{1}{S^1}$ as $s \to \infty$. Thus, the number of zeros is one less than the number of poles. Hence no zeros.

(c) 2 independent capacitors, thus there are 2 poles. As $s \to \infty$, C_1 becomes shorted and the output falls toward zero as $1/s$ due to the shunting action of C_2. Thus, there is one less zero than poles, or, 1 zero.

(d) 2 independent capacitors, thus there are 2 poles. As $s \to \infty$, the output falls toward zero as $1/s^2$ due to the shunting action of C_1 and C_2. Thus, there are 2 less zeros than poles, or, no zeros.

13-28 (a) The gain, $A = A_o/[1+(jf/f_{p1})][1+(jf/f_{p2})]$. Thus, $20\log|A| = 20\log|A_o| - 10\log(1+f^2/f_{p1}^2) - 10\log(1+f^2/f_{p2}^2)$. $20\log|A| = 20\log 10 - 10\log(1+f^2/25) - 10\log(1+f^2/400)$. Using the above, we find the

following points;

f, kHz	0.5	1	3	5	7	10	12	15
20 log A	19.95	19.82	18.57	16.73	14.79	12.04	10.37	8.06

f, kHz	30	60	100
20 log A	-0.80	-11.61	-20.18

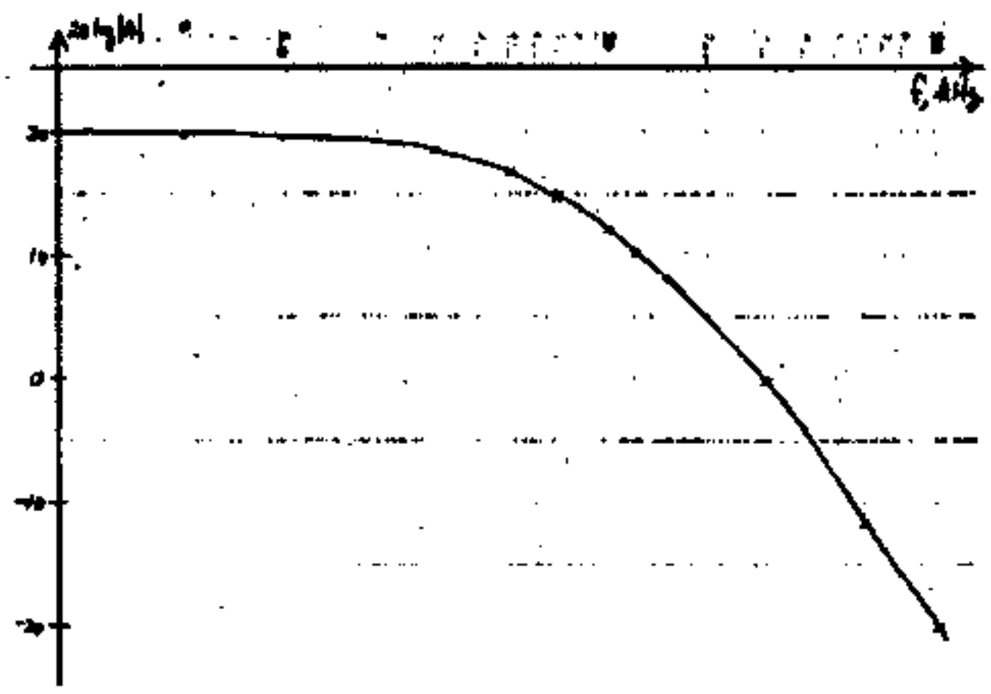

Note that $f_2 = 5\ kHz = f_{p1}$ or $F \approx 1$.

It would probably be better to solve for the general case (for <u>any</u> f_{p1}, f_{p2} such that $f_{p2} = 4f_{p1}$)

Then:

(b) $20 \log \left|\frac{A}{A_o}\right| = -3 = -10 \log(1+f^2/f_{p1}^2) - 10 \log(1+f^2/16 f_{p1}^2)$

or $0.3 = \log[(1+f^2/f_{p1}^2)(1+f^2/16f_{p1}^2)]$

$$\text{or} \quad 2 = 1 + \frac{f^2}{16f_{p1}^2} + \frac{f^2}{f_{p1}^2} + \frac{f^4}{16 f_{p1}^4}$$

$$\text{or} \quad \frac{1}{16}\left(\frac{f}{f_{p1}}\right)^4 + \frac{17}{16}\left(\frac{f}{f_{p1}}\right)^2 - 1 = 0$$

Solving for $(f/f_{p1})^2$ we have $(f/f_{p1})^2 = 0.894$ or $f = 0.946\ f_{p1}$ or f is about 5.4% smaller than f_{p1}

13-29 (a)

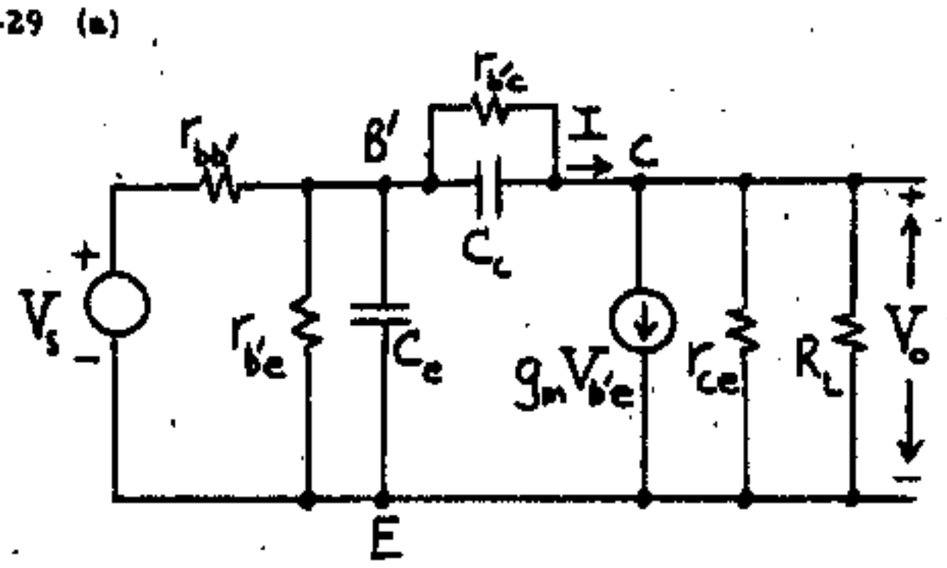

(b) There are two poles since we have two independent capacitors.

To obtain the number of zeros we look at the behavior of the circuit as $s \to \infty$, when C_c is a short circuit. The output now falls toward zero as $1/s$, due to C_e. Hence

(number of zeros) = (number of poles)-1 = 2-1 = 1.

(c) To obtain the actual value of the zero, s_o, we note that at this frequency the current in R_L and in r_{ce} is zero (because $V_o = 0$)

Hence $I = g_m V_{b'e}$ or

$(s_o C_c + \frac{1}{r_{b'c}}) V_{b'c} = g_m V_{b'e}$. Since $V_{b'c} = V_{b'e}$ at s_o (because $V_o = V_{ce} = 0$), we have

$s_o C_c + g_{b'c} = g_m$ and $s_o = \frac{g_m - g_{b'c}}{C_c}$.

13-30 (a)

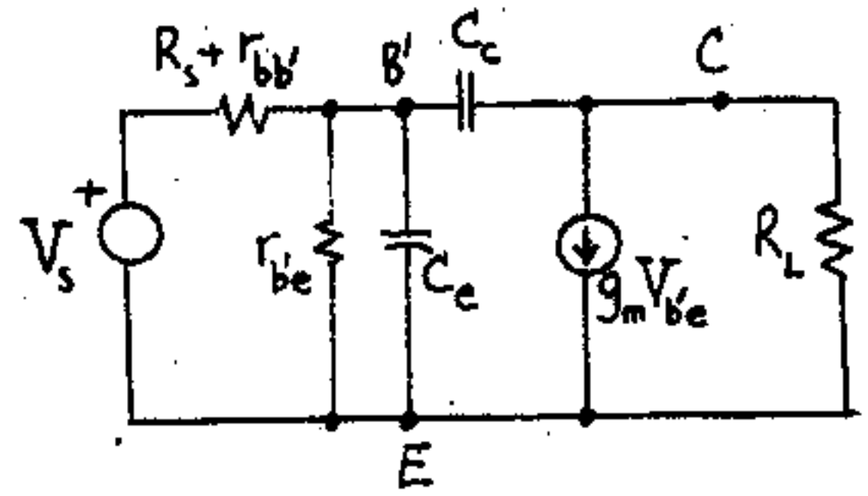

Let $R_s' = R_s + r_{bb'} = 1/G_s'$. Thus, equate the current $G_s' V_s$ toward B' to the sum of the currents leaving B'

$G_s' V_s = [G_s' + g_{b'e} + s(C_e + C_c)] V_{b'e} - sC_c V_o$ (1). At node C, the sum of the currents leaving C is zero. $0 = (g_m - sC_c) V_{b'e} + V_o(\frac{1}{R_L} + sC_c)$ (2)

(b) Solving (2) for $V_{b'e}$ and substituting into (1) gives

$$G_s' V_s = [G_s' + g_{b'e} + s(C_e + C_c)] \times \frac{V_o(\frac{1}{R_L} + sC_c)}{(sC_c - g_m)} - sC_c V_o \quad (3)$$

Solving (3) for V_o/V_s gives,

$$\frac{V_o}{V_s} = \frac{-G_s' R_L (g_m - sC_c)}{[G_s' + g_{b'e} + s(C_e + C_c)] \times (1 + sC_c R_L) - sC_c R_L (sC_c - g_m)}$$

Multiplying the denominator out and collecting terms of s^2, s^1 and s^0, gives Eq. (13-38).

13-31 (a) $R_s' = R_s + r_{bb'} = 50 + 100 = 150\ \Omega$. Thus, $G_s' = 6.67 \cdot 10^{-3}\ \mho$

$K_1 = G_s'/C_c = 6.67 \times 10^{-3}/100 \times 10^{-12} = \underline{6.67 \times 10^7}$

$S_0 = g_m/C_c = 50 \times 10^{-3}/3 \times 10^{-12} = \underline{1.67 \times 10^{10}\ rad/s}$

The poles, s_1 and s_2, are found by solving for the roots of the denominator of Eq. (13-38).

Let $a = C_e C_c R_L = 100 \times 3 \times 10^{-24} \times 2 \times 10^3 = 6 \times 10^{-19}$

Let $b = C_e + C_c + C_c R_L (g_m^* + g_{b'e} + G_s')$

$= 103 \times 10^{-12} + 3 \times 10^{-12} \times 2 \times 10^3 (50 \times 10^{-3} + \frac{1}{1 \times 10^3} + 6.67 \times 10^{-3})$

$= 4.49 \times 10^{-10}$

Let $c = G'_s + g_{b'e} = 6.67\times10^{-3} + 1\times10^{-3} = 7.67\times10^{-3}$.

Thus, $s_1, s_2 = \dfrac{-b \pm \sqrt{b^2-4ac}}{2a}$

$$= \frac{-4.49\times10^{-10} \pm \sqrt{2.02\times10^{-19} - 4\times6\times10^{-22}\times 7.67}}{2\times6\times10^{-19}}$$

$$= \frac{-4.49\times10^{-10} \pm 4.28\times10^{-10}}{1.2\times10^{-18}}$$

$\underline{s_1 = -1.75\times10^{7}\ \text{rad/s}}$

$\underline{s_2 = -7.31\times10^{8}\ \text{rad/s}}$

(b) From Eq. (13-39), with $s = 0$, $A_V = \dfrac{-K_1 s_o}{s_1 s_2} = \dfrac{-6.67\times10^{7}\times1.67\times10^{10}}{1.75\times7.31\times10^{15}} = \underline{-87.07}$

(c) From Eq. (13-39), $|A_V| = K_1 \times \left[\dfrac{s_o^2+\omega_1^2}{(s_1^2+\omega_1^2)(s_2^2+\omega_1^2)}\right]^{1/2}$

$$= 6.67\times10^{7}\times\left[\frac{(2.79\times10^{20}+(2\pi)^2\times10^{12})}{(3.06\times10^{14}+(2\pi)^2\times10^{12})(5.34\times10^{17}+(2\pi)\times10^{12})}\right]^{1/2}$$

$= \underline{82.0}$ or $20\log 82.0 = \underline{38.28\ \text{dB}}$. From Fig. 13-17, $A_V = 38.3$ dB in excellent agreement.

(d) From Eq. (13-39) $A_V = \dfrac{-K_1(s_0 - j\omega_1)}{(s_1 - j\omega_1)(s_2 - j\omega_1)}$. Hence the phase ϕ of $A_V = -\pi + \arctan(-\dfrac{\omega_1}{s_0}) + \arctan\dfrac{\omega_1}{s_1} + \arctan\dfrac{\omega_1}{s_2}$. Since s_0 is positive and s_1 and s_2 are negative, then $\phi = -\pi \arctan\dfrac{2\pi\times10^6}{1.67\times10^{10}} - \arctan\dfrac{2\pi\times10^6}{1.75\times10^7} - \arctan\dfrac{2\pi\times10^6}{7.31\times10^8}$

$= -[\pi + (3.762\times10^{-4} + 3.447\times10^{-1} + 8.595\times10^{-3})\text{rad}] = -\pi - 0.354\ \text{rad} = -\pi - 0.112\pi = -1.11\pi$

13-32 (a)

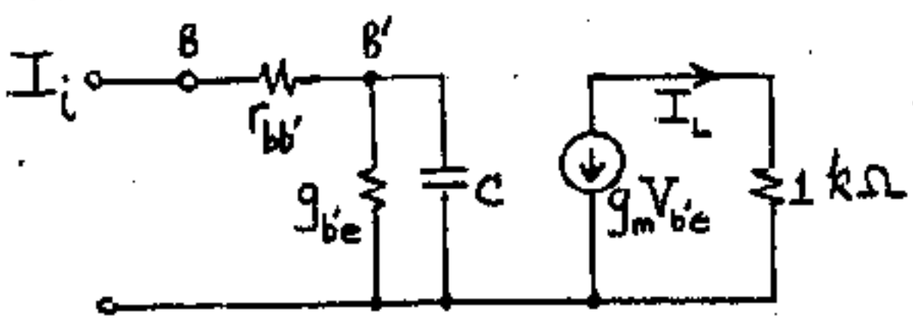

$C = C_e + C_c(1-K) = C_e + C_c(1+g_m R_L) = 100 + 3(1+50\times2) = 403$ pF.

$A_I = \dfrac{I_L}{I_i} = \dfrac{-g_m V_{b'e}}{I_i}$. $I_i = V_{b'e}(g_{b'e} + sC)$. Thus, $A_I = -g_m/(g_{b'e} + sC)$. Since $g_m = h_{fe} g_{b'e}$,

$A_I = \dfrac{-h_{fe}}{1+(sC/g_{b'e})} = \dfrac{-h_{fe}}{1+(jf/f_I)}$ where

$f_I = \dfrac{g_{b'e}}{2\pi C} = \dfrac{10^{-3}}{2\times\pi\times403\times10^{-12}} = \underline{0.395\ \text{MHz}}$.

(b) From Eq. (13-45), $f_H = \dfrac{G'_s + g_{b'e}}{2\pi C}$

$= \dfrac{9.09\times10^{-4} + 10^{-3}}{2\pi\times403\times10^{-12}}$ Hz where $R'_s = R_s + r_{bb'} = 1 + 0.1 = 1.10$ kΩ and $G'_s = 1/1.10\times10^3 = 9.09\times10^{-4}$ ℧.

$f_H = 0.754$ MHz. From Eq. (13-42),

$$A_{Vs} = \frac{-g_m R_L G'_s/(G'_s + g_{b'e})}{1+(jf/f_H)}.$$

$$|A_{Vs}| = \frac{g_m R_L G'_s}{(G'_s + g_{b'e})[1+(f/f_H)^2]^{1/2}}$$ At $f = f_I$,

$$|A_{Vs}| = \frac{50\times10^{-3}\times2\times10^3\times9.09\times10^{-4}}{(9.09\times10^{-4}+10^{-3})[1+(0.395/0.754)^2]^{1/2}} = \underline{42.18}$$

13-33 (a) $R'_s = R_s + r_{bb'} = 1/G'_s$. From Eq. (13-40), $C = C_e + C_c(1+g_m R_L)$. From Eq. (13-45), $f_H = \dfrac{G'_s + g_{b'e}}{2\pi C}$

If $R_s = 0$, $f'_H = \dfrac{g_{bb'} + g_{b'e}}{2\pi C}$. Now we need the value of R_s such that $f'_H = 2f_H$. Thus, $2 = (g_{bb'} + g_{b'e})/G'_s + g_{b'e}$

$= \dfrac{0.01+10^{-3}}{G'_s + 10^{-3}}$ or $G'_s = 4.50\times10^{-3}$ ℧. Hence

$1/G'_s = R'_s = 222.2 = R_s + r_{bb'} = R_s + 100$. Thus,

$\underline{R_s = 122.2\ \Omega}$

(b) If $R_s = \infty$, $f'_H = \dfrac{g_{b'e}}{2\pi C}$. Thus, we need the value of R_s such that $f_H = 2f'_H$. Thus,

$2 = (G'_s + g_{b'e})/g_{b'e} = (G'_s + 10^{-3})/10^{-3}$ or $G'_s = 10^{-3}$ ℧.

Hence, $1/G'_s = R'_s = 10^3 = R_s + r_{bb'} = R_s + 100$. Thus, $\underline{R_s = 900\ \Omega}$. These values of R_s do not depend upon R_L.

13-34 (a) From Eq. (13-28), $C_e \approx g_m/2\pi f_T = 50\times10^{-3}/2\pi\times300\times10^6 = 26.53$ pF. Recall, $r_{b'e} = h_{fe}/g_m = 100/50 = 2$ kΩ. From Eq. (13-40), $C = C_e + C_c(1+g_m R_L) = 26.53 + 2(1+50\times0.6) = 88.53$ pF.

From Eq. (13-45), $f_H = \dfrac{G'_s + g_{b'e}}{2\pi C}$ where $\dfrac{1}{G'_s} = R'_s = R_s + r_{bb'}$. Thus, $G'_s = f_H\times2\pi C - g_{b'e} = 4\times10^6\times2\pi\times88.53\times10^{-12} - 5\times10^{-4} = 1.73\times10^{-3}$ ℧. Thus, $\dfrac{1}{G'_s} = R'_s = 578 = R_s + r_{bb'} = R_s + 100$. Hence, $\underline{R_s = 478\ \Omega}$

(b) From Eq. (13-42), $A_{Vso} = -g_m R_L G'_s/(G'_s + g_{b'e} + 0) = -50\times0.6\times1.73/(1.73+0.5) = \underline{-23.27}$

13-35

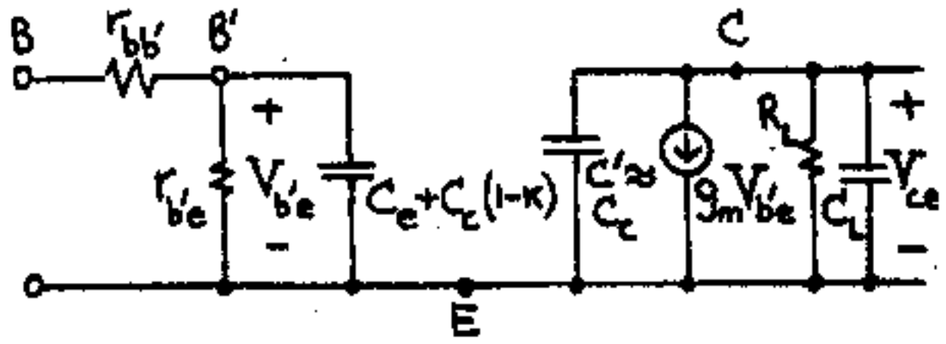

(a) $K = V_{ce}/V_{b'e}$. $V_{ce}=I/Y$ where I = short-circuit current and $Y=1/R_L+j\omega C_c+j\omega C_L=[1+j\omega R_L(C_c+C_L)]/R_L$ and $I = -g_mV_{b'e}$. Thus, $K =$

$$\frac{1}{V_{b'e}}(-g_mV_{b'e})\frac{R_L}{[1+j\omega R_L(C_c+C_L)]} = \frac{-g_mR_L}{1+j\omega R_L(C_c+C_L)}$$

(b) This circuit has two time constants; $R_L(C_L+C_c)$ and $r_{b'e}[C_e+C_c(1+g_mR_L)]$. If $R_L(C_L+C_c) \gg r_{b'e}[C_e+C_c(1+g_mR_L)]$ or $g_{b'e}R_L(C_L+C_c) \gg [C_e+C_c(1+g_mR_L)]$, f_H is determined by the larger time constant or $f_H \approx \frac{1}{2\pi\tau} = \frac{1}{2\pi R_L(C_L+C_c)}$

13-36 (a)

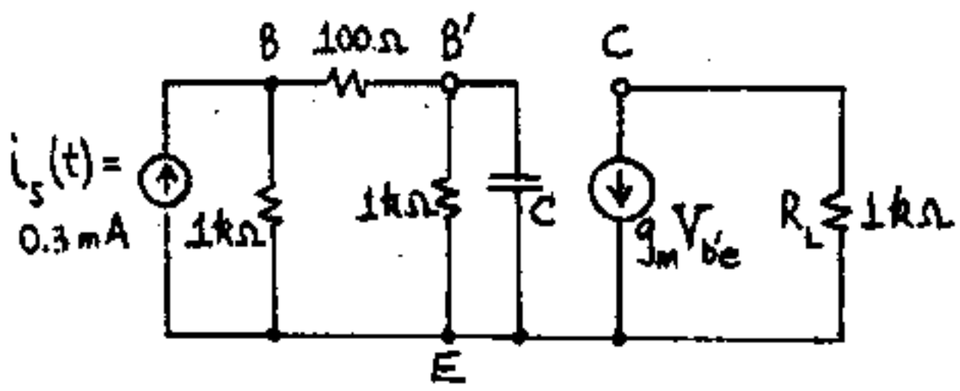

From Miller's theorem, $C=C_e+C_c(1+g_mR_L)=100+3(1+50\times1) = 253$ pF. Applying Thevenin's theorem to the left of B gives,

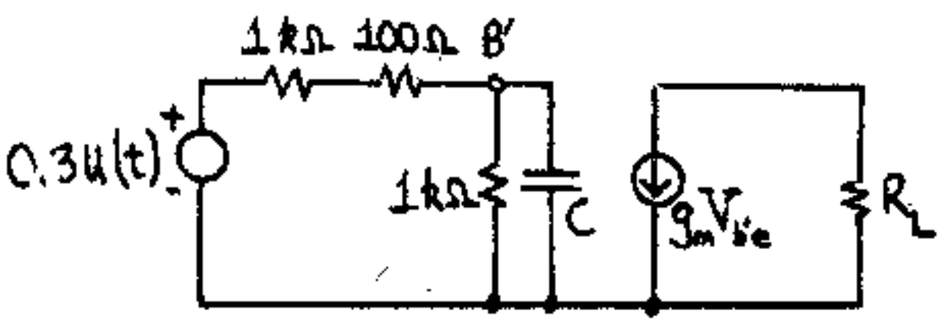

Applying Thevenin's theorem to the left of B' gives,

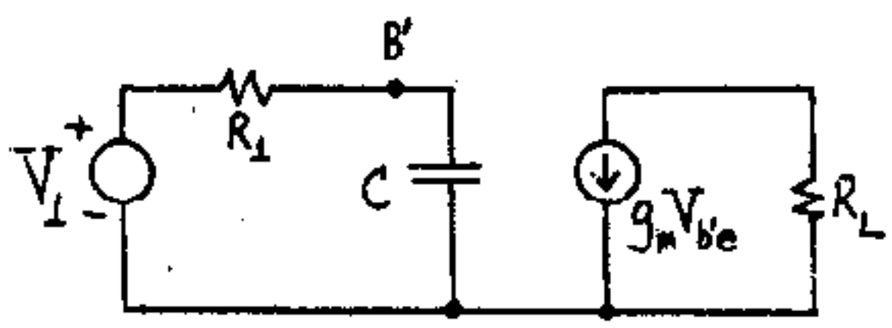

where $R_1=1.1\|1=0.524$ kΩ and $V_1=\frac{0.3\,u(t)\times 1}{1.1+1} = 0.143\,u(t)$. Thus, the input circuit time constant is $R_1C = 0.524\times10^3 \times 253\times10^{-12} = 0.133$ μsec.

Thus $V_{b'e}=0.143\,(1-e^{-t/0.133})$ with t given in μsec. Hence, $V_o=-g_mR_LV_{b'e}=-50\times1\times0.143(1-e^{-t/0.133})$ $=\underline{-7.15(1-e^{-t/0.133})}$.

(b) The time constant of the output is $R_LC_L=10^3\times0.2\times10^{-6}$ s = 200 μs, which is ≫ the input time constant. Thus, $V_o=-g_mR_LV_{b'e}=-50\times1\times0.143(1-e^{-t/200}) = \underline{-7.15\,(1-e^{-t/200})}$ where t is given in μs.

13-37

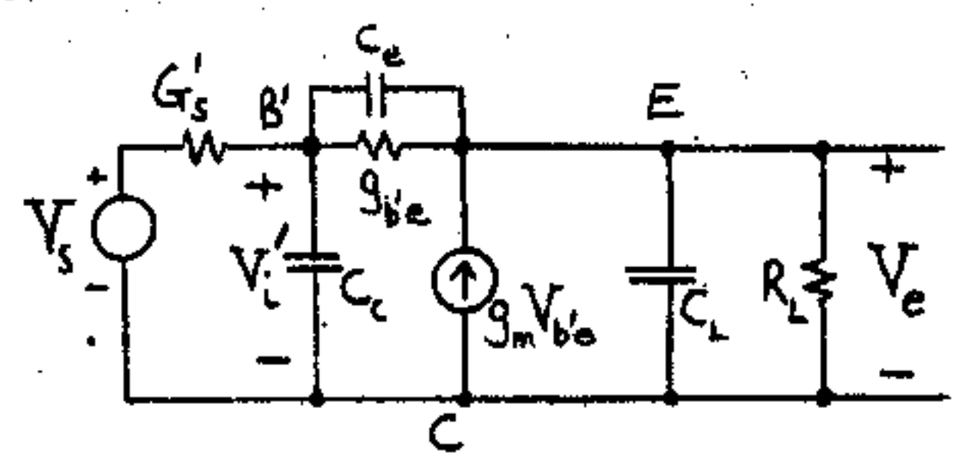

(a) At node B'; $0 = G_s'(V_i'-V_s)+sC_cV_i'+(g_{b'e}+sC_e)(V_i'-V_e)$, or, $G_s'V_s=V_i'[G_s'+sC_c+sC_e+g_{b'e}]-V_e(g_{b'e}+sC_e)$ which is Eq. (13-55). At node E, with $V_{b'e}=V_i'-V_e$, we have, $-g(V_i'-V_e)+(V_e-V_i')(sC_e)+sC_LV_e+V_e/R_L=0$, or, $V_i'(-g-sC_e)+V_e(g+sC_e+sC_L+\frac{1}{R_L})=0$ which is Eq. (13-56).

(b) Solving for V_i' in Eq. (13-56) and substituting into Eq. (13-55) gives,

$$G_s'V_s = \frac{[g+g_L+s(C_e+C_L)]V_e[G_s'+g_{b'e}+s(C_e+C_c)}{(g+sC_e)} - \frac{(g_{b'e}+sC_e)V_e(g+sC_e)}{(g+sC_e)}$$

Thus, $\frac{V_e}{V_s} =$

$$\frac{G_s'(g+sC_e)}{[g+g_L+s(C_e+C_L)][G_s'+g_{b'e}+s(C_e+C_c)]-(g_{b'e}+sC_e)(g+sC_e)}$$

Collecting coefficients of the powers of s gives,

$\frac{V_e}{V_s} =$

$$\frac{G_s'(g+sC_e)}{s^2(C_LC_e+C_LC_c+C_eC_c)+s[C_e(g_L+G_s')+C_L(G_s'+g_{b'e})+C_c(g_L+g)] + g_L(G_s'+g_{b'e})+G_s'g}$$

13-38 (a) From KVL, $V_i= I_b(r_{bb'}+r_{b'e}+R_L)+g_mV_{b'e}R_L$

Since $V_{b'e}=I_br_{b'e}$, $V_s= I_b(R_s+r_{bb'}+r_{b'e}+R_L+g_mr_{b'e}R_L)$

Recall, $g_m r_{b'e} = h_{fe}$ and $h_{ie} = r_{bb'} + r_{b'e}$. Thus,

$R_i = V_i/I_b = \underline{h_{ie} + R_L(1+h_{fe})}$.

(b) $R_o = V_{oc}/I_{sc}$. With $V_e = 0$, $I_{sc} = g_m V_{b'e} + I_b = (1+h_{fe})I_b$. $I_b = V_s/(R_s + r_{bb'} + r_{b'e}) = V_s/(R_s + h_{ie})$.

Thus, $I_{sc} = \dfrac{(1+h_{fe})V_s}{(R_s+h_{ie})}$. Setting $R_L = \infty$,

$I_b = -g_m V_{b'e} = -g_m r_{b'e} I_b = -h_{fe} I_b$. Thus,

$0 = I_b(1+h_{fe})$. Thus, $I_b = 0$ and $V_{oc} = V_s$.

Hence, $R_o = V_s \times \dfrac{(R_s+h_{ie})}{(1+h_{fe})V_s} = \underline{\dfrac{R_s+h_{ie}}{1+h_{fe}}}$.

(c) By inspection, these values are consistent with Table 11-4.

13-39 (a) From the circuit shown we find:

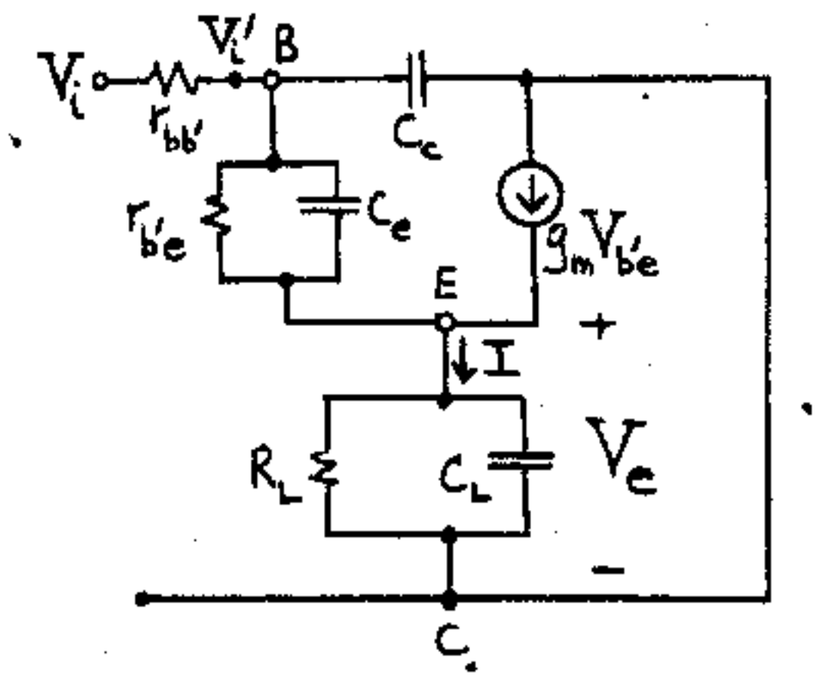

$$V_e = IZ_L = I\frac{1}{\frac{1}{R_L}+j\omega C_L} = I\frac{R_L}{1+j\omega C_L R_L} \text{ or}$$

$$V_e = (V_i' - V_e)[g_m + g_{b'e} + j\omega C_e]\frac{R_L}{1+j\omega C_L R_L} =$$

$$= (V_i' - V_e)[g + j\omega C_e]\frac{R_L}{1+j\omega C_L R_L}.$$

We have

$$V_e\left[1+(g+j\omega C_e)\frac{R_L}{1+j\omega C_L R_L}\right] = V_i'[g+j\omega C_e]\frac{R_L}{1+j\omega C_L R_L} \text{ or}$$

$$K = \frac{V_e}{V_i'} = \frac{(g+j\omega C_e)\frac{R_L}{1+j\omega C_L R_L}}{1+(g+j\omega C_e)\frac{R_L}{1+j\omega C_L R_L}} = \frac{(g+j\omega C_e)R_L}{1+j\omega C_L R_L + (g+j\omega C_e)R_L}$$

$$= \frac{gR_L(1+j\omega\frac{C_e}{g})}{1+gR_L+j\omega R_L(C_L+C_e)} = \frac{gR_L}{1+gR_L}\;\frac{1+j\omega\frac{C_e}{g}}{1+j\omega\frac{R_L}{1+gR_L}(C_L+C_e)}$$

(b) For $gR_L \gg 1$ and $C_L \gg C_e$ we have,

$$K = \frac{1+j\omega\frac{C_e}{g}}{1+j\omega\frac{C_L}{g}}.$$

Since $C_L \gg C_e$ then the imaginary term in the denominator is much larger than that in the numerator.

Hence

$$K \approx \frac{1}{1+j\frac{2\pi f C_L}{g}} = \frac{1}{1+jf/f_H}$$

where $f_H = \dfrac{g}{2\pi C_L} = \dfrac{g_m + g_{b'e}}{2\pi C_L}$

13-40 For R and C in parallel $Z = \dfrac{R}{1+RCs}$

Let $Z_1 = \dfrac{10^3}{1+2.09\times10^{-7}s}$ and $Z_2 = \dfrac{10^3}{1+4.03\times10^{-7}s}$

in Fig. 13-24. Thus, $V_1/V_s = Z_1/(Z_1+150) =$

$$\frac{10^3/(1+2.09\times10^{-7}s)}{150+[10^3/(1+2.09\times10^{-7}s)]} = \frac{10^3}{1.15\times10^3+3.135\times10^{-5}\times s}$$

Let the current in the 100 Ω resistor between V_2 and V_3 be I. Then, $I = -g_m V_1 \times \dfrac{2\times10^3}{2\times10^3+100+Z_2}$.

Thus, $I/V_1 = \dfrac{-50\times2}{2.1\times10^3+[10^3/(1+4.03\times10^{-7}\times s)]}$

$$= \frac{-100-4.03\times10^5\times s}{3.1\times10^3+8.463\times10^{-4}\times s}$$

$V_3 = Z_2 I$ or, $V_3/V_1 = Z_2 I/V_1 =$

$$\frac{10^3}{1+4.03\times10^{-7}\times s}\times\frac{-100-4.03\times10^{-5}\times s}{3.1\times10^3+8.463\times10^{-4}\times s}$$

$$= \frac{-10^5}{3.1\times10^3+8.463\times10^{-4}\times s}.$$

$\dfrac{V_4}{V_3} = -g_m\times2\times10^3 = -100$. Hence, $\dfrac{V_4}{V_s} = \dfrac{V_4}{V_3}\times\dfrac{V_3}{V_1}\times\dfrac{V_1}{V_s} =$

$$\frac{-100\times(-10^5)}{3.1\times10^3+8.463\times10^{-4}\times s}\times\frac{10^3}{1.15\times10^3+3.135\times10^{-5}\times s} =$$

$$\frac{3.226\times10^3}{1+2.730\times10^{-7}\times s}\times\frac{8.696\times10^{-1}}{1+2.726\times10^{-8}\times s}.$$ If $s = j2\pi f$,

$$V_4/V_s = \frac{2805}{[1+(jf/5.829\times10^5)][1+(jf/5.829\times10^6)]}$$ which is in close agreement with Eq. (13-70)

13-41 (a)

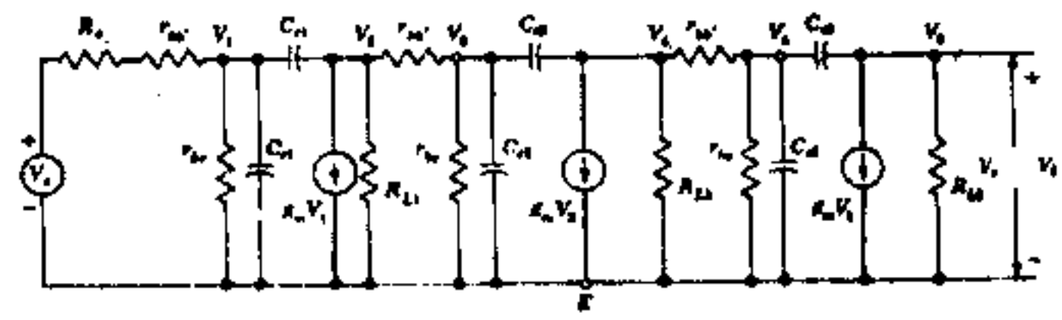

(b)

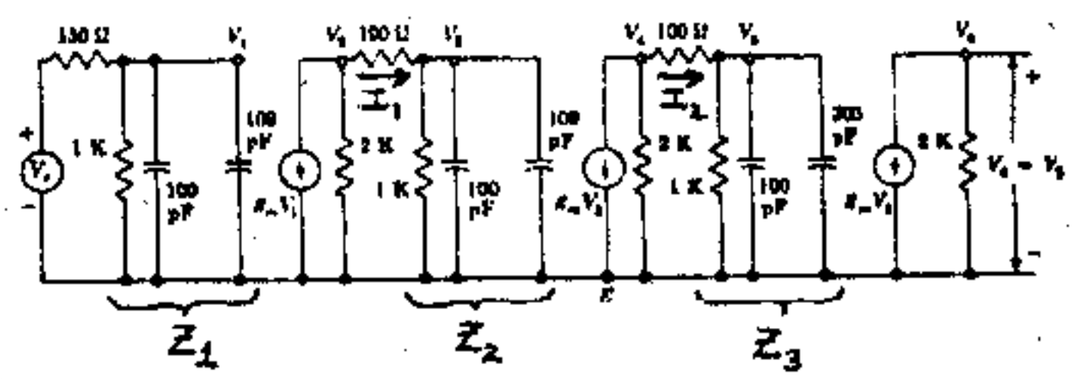

(c) The equivalent circuit of Fig. 13-24 can be simplified as indicated.

$$Z_1 = \frac{10^3}{1+2.09\times10^{-7}s} = Z_2 \text{ and } Z_3 = \frac{10^3}{1+4.03\times10^{-7}s}$$

$$\text{Then } \frac{V_1}{V_s} = \frac{10^3}{1.15\times10^3+3.14\times10^{-5}s}$$

$$I_1 = -g_m V_1 \frac{2\times10^3}{2\times10^3+Z_2+100} = \frac{-10^2(1.0+2.09\times10^{-7}s)}{3.1\times10^3+4.39\times10^{-4}s} V_1$$

$$\text{and } V_3 = Z_2 I_1 \text{ or } \frac{V_3}{V_1} = Z_2\frac{I_1}{V_1} = \frac{-10^5}{3.1\times10^{+3}+4.39\times10^{-4}s}$$

$$I_2 = -g_m V_3 \frac{2\times10^3}{2\times10^3+Z_3+100} = \frac{-10^2(1+4.03\times10^{-7}s)}{3.1\times10^3+8.46\times10^{-4}s} V_3$$

$$\text{and } \frac{V_5}{V_3} = Z_3\frac{I_2}{V_3} = \frac{-10^5}{3.1\times10^3+8.46\times10^{-4}s}$$

$$\frac{V_o}{V_5} = -g_m\times2\times10^3 = -10^2. \quad \text{Then}$$

$$\frac{V_o}{V_s} = \frac{V_o}{V_5}\times\frac{V_5}{V_3}\times\frac{V_3}{V_1}\times\frac{V_1}{V_s} =$$

$$= -10^2\frac{-10^5\times(-10^5)\times10^3}{(3.1\times10^3+8.46\times10^{-4}s)(3.1\times10^3+4.39\times10^{-4}s)(3.15\times10^3+3.14\times10^{-5}s)}$$

$$= \frac{-10^{15}\times(3.1\times3.1\times1.15)^{-1}\times10^{-9}}{(1+\frac{s}{0.366\times10^7})(1+\frac{s}{0.706\times10^7})(1+\frac{s}{0.366\times10^8})} =$$

$$= \frac{-90.5\times10^3}{(1+j\frac{f}{0.583\times10^6})(1+j\frac{f}{1.12\times10^6})(1+j\frac{f}{5.83\times10^6})}$$

13-42 The input impedance is given by Eq. (13-78a)

$$Y_i = Y_{gs}+(1-A_1-jA_2)Y_{gd}$$
$$= j\omega C_{gs}+(1-A_1)j\omega C_{gd}-jA_2(j\omega C_{gd})$$
$$= \omega A_2 C_{gd}+j\omega[C_{gs}+(1-A_1)C_{gd}]$$
$$= \frac{1}{R_i}+j\omega C_i$$
$$\therefore\ R_i = \frac{1}{\omega A_2 C_{gd}} \qquad C_i = C_{gs}+(1-A_1)\,C_{gd}$$

13-43 For $f = 100$ Hz, we have,

$Y_{gs} = j\omega C_{gs} = j2\pi\times10^2\times4\times10^{-12} = j2.51\times10^{-9}$ ℧.

$Y_{ds} = j\omega C_{ds} = j2\pi\times10^2\times1\times10^{-12} = j6.28\times10^{-10}$ ℧.

$Y_{gd} = j\omega C_{gd} = j2\pi\,10^2\times2.5\times10^{-12} = j1.57\times10^{-9}$ ℧.

$g_m = \mu/r_d = 50/20 = 2.5$ mA/V.

$g_d = 1/r_d = 1/20\times10^3 = 5\times10^{-5}$ ℧. $Y_d = 1/R_d = 1.11\times10^{-5}$ ℧.

From Eq. (13-76), $A_V = \dfrac{-g_m+Y_{gd}}{Y_d+g_d+Y_{ds}+Y_{gd}} =$

$$\frac{-2.5\times10^{-3}+j1.57\times10^{-9}}{1.11\times10^{-5}+5\times10^{-5}+j6.28\times10^{-10}+j1.57\times10^{-9}} =$$

$$\frac{-2.5\times10^{-3}+j1.57\times10^{-9}}{6.11\times10^{-5}+j2.2\times10^{-9}}$$

The j terms may be neglected with respect to the real terms. Thus, $A_V = -2.5\times10^{-3}/6.11\times10^{-5} = \underline{-40.92}$

The input capacitance is given by Eq. (13-78).

Thus, $C_i = C_{gs}+(1-A_V)C_{gd} = 4+(1+40.92)\times2.5 = \underline{108.8 \text{ pF}}$

$R_i = \infty$

Repeating the above calculations for $f = 10^5$ Hz,

$Y_{gs} = j2.51\times10^{-6}$ ℧, $Y_{ds} = j6.28\times10^{-7}$ ℧, $Y_{gd} = j1.57\times10^{-6}$ ℧.

$$A_V = \frac{-2.5\times10^{-3}+j1.57\times10^{-6}}{6.11\times10^{-5}+j2.2\times10^{-6}} \approx \frac{-2.5\times10^{-3}\times10^5}{6.11+j0.22}$$

$$= \frac{-2.5\times10^2\times(6.11-j0.22)}{37.38} = \underline{-40.86+j1.47}$$. We see that for higher frequency, the capacitances reduce the real part of the gain slightly.

From Eq. (13-78a), $G_i+j\omega C_i = j\omega C_{gs}+(1-A_V)\times j\omega C_{gd}$.

Thus, $G_i = 2\pi f\times1.47\times2.5\times10^{-12}$. At $f = 10^5$ Hz,

$G_i = 2.31\times10^{-6}$ ℧. Hence $\underline{R_i = \frac{1}{G_i} = 433 \text{ k}\Omega}$.

$C_i = 4+(41.86)2.5 = \underline{108.65 \text{ pF}}$.

13-44 (a) From Eq. (13-76) $A_V = \dfrac{-g_m+Y_{gd}}{Y_L+g_d+Y_{ds}+Y_{gd}}$

Now, since $g_m \gg \omega C_{gd}$ and $Y_L = 1/R_d+j\omega C_d$

$= G_d+j\omega C_d$, $\quad A_V \approx \dfrac{-g_m}{(G_d+g_d)+j2\pi f(C_d+C_{ds}+C_{gd})} =$

$$-\frac{g_m}{G_d+g_d}\,\frac{1}{1+j2\pi fCR_d'} = \frac{A_{Vo}}{1+jf/f_H} \quad \text{where}$$

$R_d' = 1/(G_d+g_d) = R_d\|r_d$, $\quad f_H = 1/2\pi CR_d'$,

$A_{Vo} = -\dfrac{g_m}{G_d+g_d}$, and $C = C_d+C_{ds}+C_{gd}$.

(b) $C = 100+1+2.8 = 103.8$ pF

$R_d' = 50\|44 = \dfrac{50\times44}{50+44} = 23.4$ kΩ and

$f_H = 1/2\pi\times103.8\times10^{-12}\times23.4\times10^3$ Hz $= 65.5$ kHz.

For the bipolar transistor CE amplifier of Section 13-9 $f_H = 3.04$ MHz; hence the latter is superior for high frequency response.

13-45 Note that C_{gs} is across V_i. Thus, since the transfer function $A_V = V_o/V_i$, it contributes neither a zero nor a pole. The same is true for C_{gd} in Fig. (13-26).

(a) V_i is across C_{gd} and C_{ds} are in series. Hence, the voltages across C_{gd} and C_{ds} can not

be specified independently. Thus, we have one independent capacitor and one pole. As $s \to \infty$, r_d and Z_L can be neglected due to the shunting reactance $\frac{1}{sC_{ds}}$. The current $g_m V_i$ does not affect V_o because it passes through the very small reactance $1/s\,C_{ds}$. As $s \to \infty$ due to the reactance $1/sC_{gd}$. Thus the circuit is reduced to,

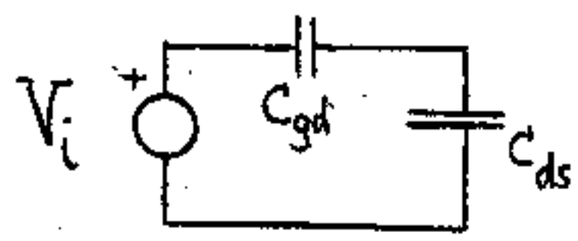

and $V_o/V_i = \frac{C_{gd}}{C_{ds}+C_{gd}}$ = constant = $1/s^o$. Thus, the number of zeros = number of poles = 1.

(b) The analysis is completely analogous to that of part (a), noticing that, again, there is only one independent capacitor. C_{dn} and C_{sn} are in parallel and thus are equivalent to a single capacitor C. C is in series with C_{gs}. Thus, we have, as before, one independent capacitor, one pole and one zero.

13-46 (a) $V_o = I_{SC} \times Z$ where $I_{SC} = V_i(g_m + j\omega C_{gs})$ and Z is the impedance seen at the output with $V_i = 0$. Thus, $Y = 1/Z = 1/R_s + g_d + j\omega(C_{gs}+C_{ds}+C_{sn}) + g_m$. The term g_m arises as follows: If $V_i = 0$ then $V_{gs} = -V$ where V is an applied voltage to the output. Hence, the current drawn from the voltage V is $g_m V$ and the ratio of current to voltage is g_m, which means that the current source is effectively a conductance g_m.

Hence, $A_V = V_o/V_i = I_{SC}/V_i Y$

$$= \frac{(g_m + j\omega C_{gs})R_s}{1+[g_m+g_d+j\omega(C_{gs}+C_{ds}+C_{sn})]R_s}$$

(b) Applying Miller's theorem to C_{gs}, we obtain, by inspection, $Y_i = j\omega C_{gd} + j\omega C_{gs}(1-A_V)$

(c) In Fig. 13-26, we set $V_i = 0$ and feed a signal, V, at the output terminals. Note that $V_{gs} = -V$. Thus, the current drawn is $I = g_m V + (g_d + \frac{1}{R_s} + j\omega C_T)V$, where $C_T = C_{gs}+C_{ds}+C_{sn}$.

If R_s is considered external, $Y_o = 1/V = g_m + g_d + j\omega C_T$.

13-47 For a CG amplifier, with $C_{ds}=0$, we have the following figure;

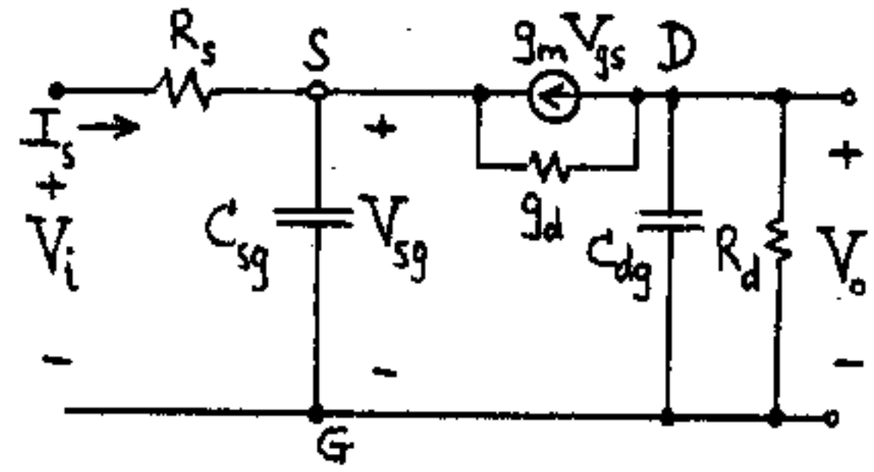

(a) $R_s = 0$, then $V_i = V_{sg} = -V_{gs}$. $A_V = \frac{V_o}{V_i} = \frac{V_o}{V_{sg}}$

where $V_o = I_{sc}Z$. $I_{sc} = -g_m V_{gs} + g_d V_{sg} = (g_m+g_d)V_{sg}$

and Z = output impedance with $V_{sg}=0$. $Y = \frac{1}{Z}$

$= \frac{1}{R_d} + g_d + j\omega C_{dg}$

$$\therefore\ A_V = \frac{g_m + g_d}{\frac{1}{R_d}+g_d+j\omega C_{dg}} = \frac{(g_m+g_d)R_d}{1+R_d(g_d+j\omega C_{dg})}$$

(b) KCL at node S gives: $I_s = V_{sg}(j\omega C_{sg}) - g_m V_{gs} + g_d(V_{sg} - V_o)$

$$\therefore\ Y_i = \frac{I_s}{V_{sg}} = j\omega C_{sg} + g_m + g_d(1-A_V)$$

(c) $A_V' = \frac{V_o}{V_i}$. KCL at node s gives:

$$\frac{-V_i}{R_s} + j\omega C_{sg}V_{sg} + g_d V_{sg} + g_m V_{sg} + \frac{1}{R_s}V_{sg} - V_o g_d = 0,$$

or $V_{sg} = \frac{V_i + R_s g_d V_o}{1+(g_m+g_d+j\omega C_{sg})R_s}$. Now, KCL at node D gives: $g_m V_{gs} + V_o(\frac{1}{R_d}+g_d+j\omega C_{dg}) = g_d V_{sg}$

but $V_{gs} = -V_{sg}$, so $V_o(\frac{1}{R_d}+g_d+j\omega C_{dg}) = (g_m+g_d)V_{sg}$

or $V_o(\frac{1}{R_d}+g_d+j\omega C_{dg}) = \frac{(g_m+g_d)(V_i+R_s g_d V_o)}{1+(g_m+g_d+j\omega C_{sg})R_s}$ or

$$V_o\left[\frac{1}{R_d}+g_d+j\omega C_{dg} - \frac{(g_m+g_d)R_s g_d}{1+(g_m+g_d+j\omega C_{sg})R_s}\right] = \frac{(g_m+g_d)V_i}{1+(g_m+g_d+j\omega C_{sg})R_s}.$$

Hence, $A_V' = \frac{V_o}{V_i} =$

$$= \frac{(g_m+g_d)}{(\frac{1}{R_d}+g_d+j\omega C_{dg})[1+(g_m+g_d+j\omega C_{sg})R_s] - (g_m+g_d)R_s g_d}$$

(d) With $R_s \neq 0$, $Y_i' = \frac{1}{R_s + \frac{1}{Y_i}} = \frac{Y_i}{1+R_s Y_i} =$

$$\frac{g_m + g_d(1-A_V) + j\omega C_{sg}}{1+R_s[g_m+g_d(1-A_V)+j\omega C_{sg}]}$$

13-48 (a) From Eq. (13-84), $Y_o = g_m + g_d + j\omega C_T$.
$C_T = C_{gs} + C_{ds} + C_{sn} = 2+2+2 = 6$ pF. Thus,
$\omega C_T = 2\pi f C_T = g_m + g_d$. Hence $f = \dfrac{g_m+g_d}{2\pi C_T}$

$$= \frac{3\times 10^{-3} + 3.33\times 10^{-5}}{2\pi \times 6\times 10^{-12}} = \underline{80.46 \text{ MHz}}.$$

(b) The gain is given by Eq. (13-80).

$$A_V = \frac{(g_m + j\omega C_{gs})R_s}{1+(g_m+g_d+j\omega C_T)R_s}$$

$$= \frac{(3\times10^{-3} + j2\pi\times 80.46\times10^6\times 2\times10^{-12})50\times 10^3}{1+(3\times10^{-3}+3.33\times10^{-5}+j2\pi\times80.46\times10^6\times6\times10^{-12})50\times10^3}$$

$$= \frac{150+j50.6}{152.67+j152}. \text{ Thus, } |A_V| = \underline{0.74}$$

At low frequencies, from Eq. (13-82),

$$A_V \approx \frac{g_m R_s}{1+(g_m+g_d)R_s} = \frac{3\times 50}{1+(3+0.033)50} = \underline{0.983}$$

13-49 $$1/\sqrt{2} = \frac{1}{\sqrt{1+(f_{L1}/f_L^*)^2}} \cdots \frac{1}{\sqrt{(1+(f_{Li}/f_L^*)^2}} \cdots \frac{1}{\sqrt{1+(f_{Ln}/f_L^*)^2}}$$

For identical stages, $f_{L1} = \ldots = f_{Li} = \ldots f_{Ln} = f_L$

Thus, $\left[\dfrac{1}{\sqrt{1+(f_L/f_L^*)^2}}\right]^n = \dfrac{1}{\sqrt{2}}$.

Squaring both sides and taking the reciprocal gives

$$[1+(\frac{f_L}{f_L^*})^2]^m = 2 \qquad \text{or} \qquad (\frac{f_L}{f_L^*})^2 = 2^{1/n} - 1$$

For f_L^*/f_L we get, $f_L^*/f_L = \dfrac{1}{\sqrt{2^{1/n}-1}}$.

13-50 The transfer function is $\dfrac{K_o(s-s_{z1})(s-s_{z2})\ldots(s-s_{zk})}{(s-s_1)(s-s_2)\ \ldots\ (s-s_n)}$ $= A$. Since, for any i and j, $s_{zi} >> s_j$, we know that the three dB frequency will be smaller than the lowest pole frequency S_o, around the 3dB frequency $s - s_{zi} = -s_{zi}$. Thus, the transfer function becomes, $A \approx \dfrac{K_o(-s_{z1})(-s_{z2})\ldots(-s_{zk})}{(s-s_1)(s-s_2)\ldots(s-s_n)}$

$$= \frac{K_o \times \dfrac{(-s_{z1})(-s_{z2})\ldots(-s_{zk})}{s_1 \times s_2 \times \ldots \times s_n}}{(\frac{s}{s_1}-1)(\frac{s}{s_2}-1)\ldots(\frac{s}{s_n}-1)} = \frac{A_o}{(\frac{s}{s_1}-1)\ldots(\frac{s}{s_n}-1)}.$$

Thus, for $s = j2\pi f_H$, $\left|\dfrac{A}{A_o}\right| = \dfrac{1}{\left(\dfrac{f_H^2}{f_1^2}+1\right)^{1/2}\ldots\left(\dfrac{f_H^2}{f_n^2}+1\right)^{1/2}}$.

Setting $\left|\dfrac{A}{A_o}\right| = 1/\sqrt{2}$ gives Eq. (13-86)

13-51 (a) Proceeding as in Prob. (13-50) we find that

$$|A|_{s=j2\pi f} = \frac{A_o}{\left(\dfrac{f^2}{f_1^2}+1\right)^{1/2}\ldots\left(\dfrac{f^2}{f_n^2}+1\right)^{1/2}}.$$ Squaring both sides and expanding the denominator we have

$$|A|^2 = \frac{A_o^2}{\left[1+f^2(\frac{1}{f_1^2}+\ldots+\frac{1}{f_n^2})+f^4(\frac{1}{f_1^2 f_2^2}+\ldots)+\ldots\right]}$$

Notice that the coefficients of f in the denumerator are positive and $|A|$ is a monotonic function of f^2. For a single pole $f_H = f_1$. Assume $f_1 < f_2 < f_3 \ldots < f_n$. Then for more than one pole $f_H < f_1$ because higher order poles always decrease the bandwidth.

$\therefore \dfrac{f}{f_1} < 1, \dfrac{f}{f_2} < 1, \ldots \dfrac{f}{f_n} < 1$. Hence it follows that we can find an approximate value of f_H by using only the first two terms in the denominator,

then $\dfrac{A_o^2}{2} = \dfrac{A_o^2}{1+(f_H^*)^2(\frac{1}{f_1^2}+\ldots+\frac{1}{f_n^2})}$ solving for f_H^2

we find $\dfrac{1}{(f_H^*)^2} = \dfrac{1}{f_1^2}+\ldots+\dfrac{1}{f_n^2}$

(b) (i) Let $f_1 = f_2 = f_H$. Then, from Eq. (13-87),

$f_H^* = \sqrt{2^{1/2}-1}\ f_H = \sqrt{0.4142}\ f_H = 0.6436\ f_H$

Using the given expression, $1/f_H^* = 1.1(\dfrac{1}{f_H^2}+\dfrac{1}{f_H^2})^{1/2}$

$= \dfrac{1.1\times\sqrt{2}}{f_H}$. Thus $f_H^* = f_H/1.1\times\sqrt{2} = 0.6428\ f_H$

The error is $\dfrac{0.6436-0.6428}{0.6436}\times 100\% = 0.12\%$

(ii) Similarly, letting $f_1 = f_2 = f_3 = f_H$, $f_H^* = f_H\sqrt{2^{1/3}-1}$

$= f_H \times 0.5098$. Using the given expression,

$\dfrac{1}{f_H^*} = 1.1(\dfrac{3}{f_H^2})^{1/2} = 1.905/f_H$. Thus, $f_H^* = f_H \times 0.525$.

The error is $\dfrac{0.525-0.5098}{0.5098}100\% = 2.98\%$

(c) (i) Let $f_1 = f_2 = f_H$. Thus, $\dfrac{1}{f_H^*} = \sqrt{\dfrac{1}{f_H^2}+\dfrac{1}{f_H^2}} = \sqrt{2/f_H^2}$

$= 1.414/f_H$. Hence, $f_H^* = 0.707\ f_H$. Using Eq. (13-92) from part (b), $f_H^* = 0.6428\ f_H$. The error is

$\dfrac{0.707-0.6428}{0.707}\times 100\% = 9.08\%$

(ii) Let $f_1 = f_2 = f_3 = f_H$. Thus, $\dfrac{1}{f_H^*} = \sqrt{3/f_H^2} = 1.732/f_H$.

Hence, $f_H^* = 0.577\ f_H$. Using Eq. (13-92), from part (b), $f_H^* = 0.525\ f_H$. The error is

$\dfrac{0.577-0.525}{0.577}\times 100\% = 9.01\%$.

13-52 From Eq. (13-86), $2=(1+f_H^2/4)(1+f_H^2/16)$. Solving for f_H gives, $f_H^2=2.806$ MHz or $\underline{f_H=1.675 \text{ MHz}}$.

From Eq. (13-92), $\frac{1}{f_H}=1.1\times(\frac{1}{f_1^2}+\frac{1}{f_2^2})^{1/2}=$

$1.1(\frac{1}{4}+\frac{1}{16})^{1/2}=0.6149$ or $f_H=1.626$ MHz.

Thus, the error is $\frac{1.675-1.626}{1.675}=2.93\%$

13-53 From Eq. (13-86)

$$\left[1+\left(\frac{f_H^*}{f_{H1}}\right)^2\right]\left[1+\left(\frac{f_H^*}{f_{H2}}\right)^2\right]=2$$

If $f_{H2}\gg f_{H1}$ then a Bode plot is affected very little by the higher order pole. Hence $f_H^*\approx f_{H1}$. If we make this assumption in the above equation we obtain

$$1+\left(\frac{f_H^*}{f_{H1}}\right)^2=\frac{2}{1+\left(\frac{f_{H1}}{f_{H2}}\right)^2}\approx 2 \text{ because } f_{H1}/f_{H2}\ll 1$$

$$\therefore \frac{f_H^*}{f_{H1}}\approx 2-1=1$$

13-54 For the first stage $C=100+109=209$ pF and $R=150\ \Omega \| 1\ k\Omega=130.43\ \Omega$. Hence $f_{H1}=1/2\pi RC=1/2\pi\times130.43\times209\times10^{-12}=\underline{5.84 \text{ MHz}}$

For the second stage $C'=100+303=403$ pF and $R'=(2\ k\Omega+100\ \Omega)\|1\ k\Omega=677\ \Omega$. Hence $f_{H2}=1/2\pi R'C'=1/2\pi\times677\times403\times10^{-12}=\underline{0.583 \text{ MHz}}$

Note: These pole frequencies agree with the values given in Eq. (13-70). From Eq. (13-92)

$$\frac{1}{f_H}=1.1\sqrt{\frac{1}{f_{H1}^2}+\frac{1}{f_{H2}^2}}=1.1\sqrt{\frac{1}{5.84^2}+\frac{1}{0.583^2}}$$

$$=1.1\sqrt{0.029+2.942}=1.896$$

Hence $f_H=0.527$ MHz $=\underline{527 \text{ kHz}}$. This compares favorably with the exact value of 540 kHz found from Fig. 13-23.

13-55 From Eq. (13-87), $f_H^*=f_H(2^{1/3}-1)^{1/2}=25$ kHz.

Thus $f_H=25/5.098\times10^{-1}=\underline{49.0 \text{ kHz}}$.

From Eq. (13-88) $f_L=f_L^*(2^{1/3}-1)^{1/2}=10\times5.098\times10^{-1}=$ $\underline{5.10 \text{ Hz}}$.

CHAPTER 14

14-1 $A_o=1000$ $\beta=0.05$

For low frequencies $A_L(jf)=A_o/(1-jf_L/f)$ (1)

For high frequencies $A_H(jf)=A_o/(1+jf/f_H)$ (2)

(a) The 3-dB high frequency for the amplifier with feedback is $f_{Hf}=(1+\beta A_o)f_H=(1+0.05\times10^3)f_H=51\ f_H$

At this frequency the gain of the amplifier without feedback is, from (2),

$A_H(jf_{Hf})=A_o/(1+j51)=1000/(1+j51)$

and $|A_H(jf_{Hf})|\approx 1000/51=\underline{19.6}$.

The 3-dB low frequency with feedback is $f_{Lf}=f_L/(1+\beta A_o)=f_L/51$. At this frequency we have, from (1),

$A_L(jf_{Lf})=A_o/(1-j51)$ and, again, $|A_L(jf_{Lf})|\approx\underline{19.6}$

(b) From part (a) $f_{Hf}/f_H=\underline{51}$ and $f_{Lf}/f_L=\underline{1/51}$

(c) $f_{Hf}=51f_H=51\times30=1530$ kHz $=\underline{1.53 \text{ MHz}}$

$f_{Lf}=f_L/51=10/51=\underline{0.196 \text{ Hz}}$.

14-2 Let us cascade two amplifiers and apply feedback as shown below

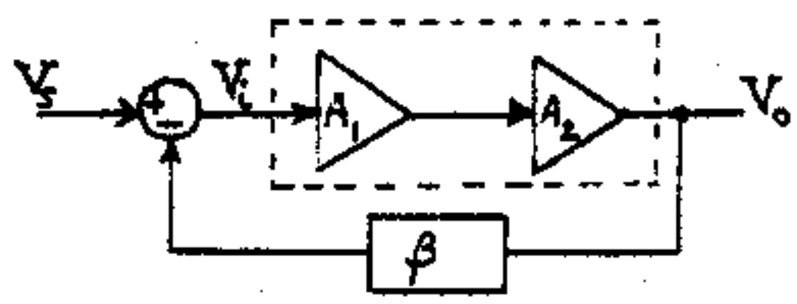

The overall midband gain A_o of the cascaded stages (the part enclosed within the dotted line) is $A_o=100\times100=10{,}000$. The 3-dB lower and higher frequencies f_L^* and f_H^* are given by Eqs. (13-88) and (13-87), respectively. Thus

$$f_L^*=\frac{f_L}{\sqrt{2^{1/2}-1}}=\frac{40}{0.64}=62.5 \text{ Hz}$$

$$f_H^*=f_H\sqrt{2^{1/2}-1}=20\times0.64=12.8 \text{ kHz}$$

The overall midband gain is from Eq. (14-4)

$A_{of}=\frac{A_o}{1+\beta A_o}>3000$ or $\frac{10{,}000}{1+\beta\,10{,}000}>3000$. Thus $\beta<2.333\times10^{-4}$

From Eq. (14-4) $f_{Hf}=f_H^*(1+\beta A_o)>30$ kHz or $12.8(1+\beta10{,}000)>30$ from which $\beta>1.343\times10^{-4}$

Finally, from Eq. (14-6) $f_{Lf}=f_L^*/(1+\beta A_o)<20$ or $62.5/(1+\beta\,10{,}000)<20$, from which $\beta>2.125\times10^{-4}$

From these three requirements on β we conclude that any value of β between 2.125×10^{-4} and

2.333×10^{-4} will satisfy the specifications.

14-3 (a) Using Eq. (14-1) and substituting in it A from Eq. (14-8) we obtain

$$A_f = \frac{\dfrac{A_o}{(1+\frac{s}{\omega_1})(1+\frac{s}{\omega_2})}}{1+\beta\dfrac{A_o}{(1+\frac{s}{\omega_1})(1+\frac{s}{\omega_2})}} = \frac{A_o}{(1+\frac{s}{\omega_1})(1+\frac{s}{\omega_2})+\beta A_o} =$$

$$\frac{A_o\omega_1\omega_2}{(\omega_1+s)(\omega_2+s)+\omega_1\omega_2\beta A_o} = \frac{A_o\omega_1\omega_2}{s^2+(\omega_1+\omega_2)s+\omega_1\omega_2(1+\beta A_o)} \quad (1)$$

Let $\omega_o = \sqrt{\omega_1\omega_2(1+\beta A_o)}$ and $Q = \dfrac{\omega_o}{\omega_1+\omega_2}$ then (1) becomes,

$$A_f = \frac{\dfrac{A_o}{1+\beta A_o}}{\dfrac{s^2}{\omega_1\omega_2(1+\beta A_o)} + \dfrac{\omega_1+\omega_2}{\sqrt{\omega_1\omega_2(1+\beta A_o)}}\times\dfrac{s}{\sqrt{\omega_1\omega_2(1+\beta A_o)}}+1} =$$

$$= \frac{A_{of}}{(\frac{s}{\omega_o})^2+\frac{1}{Q}\times\frac{s}{\omega_o}+1}$$

(b) For $Q = Q_{min} = \dfrac{\sqrt{\omega_1\omega_2}}{\omega_1+\omega_2}$ and $\omega_o = \sqrt{\omega_1\omega_2}$ then the denominator of Eq. (14-10) becomes $D(s) = s^2+(\omega_1+\omega_2)s+\omega_1\omega_2$ therefore the roots of D(s) are ω_1 and ω_2.

14-4 Let Z be the parallel combination in Fig. 14-4. Thus $Z = (R/sC)/(R+1/sC) = R/(1+sRC)$ and

$$\frac{V_o}{V_i} = \frac{Z}{Z+sL} = \frac{R/(1+sRC)}{R/(1+sRC)+sL} = \frac{R}{R+sL(1+sRC)} =$$

$$\frac{1}{s^2LC+s\frac{L}{R}+1}$$ which is Eq. (14-14)

Letting $\omega_o = 1/\sqrt{LC}$ and $Q = R/\omega_o L$ we have $LC = 1/\omega_o^2$ and $L/R = 1/Q\omega_o$. Thus

$$\frac{V_o}{V_i} = \frac{1}{(s/\omega_o)^2+(1/Q\omega_o)s+1}$$ which is Eq. (14-16)

14-5

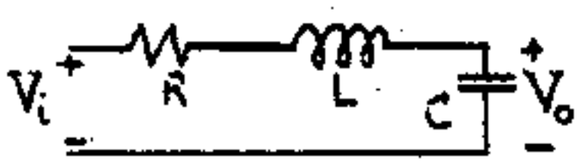

$$\frac{V_o}{V_i} = \frac{1/sC}{R+sL+\frac{1}{sC}} = \frac{1}{s^2CL+sRC+1}$$

Let $\omega_o = 1/\sqrt{LC}$ and $\dfrac{1}{Q\omega_o} = RC$ or $Q = \sqrt{L/C}/R$.

Then $\dfrac{V_o}{V_i} = \dfrac{1}{(s/\omega_o)^2+(1/Q)(s/\omega_o)+1}$ Q.E.D.

14-6 (a) From Eq. (14-10) substituting Q with $\frac{1}{2k}$ we have $A_f = \dfrac{A_{of}}{(\frac{s}{\omega_o})^2+2k(\frac{s}{\omega_o})+1}$. We substitute s with $j\omega$ or $s = j\omega$ and we find $\dfrac{A_f}{A_{of}} = \dfrac{1}{j2k\frac{\omega}{\omega_o}+1-(\frac{\omega}{\omega_o})^2}$

hence $\dfrac{A_f}{A_{of}} = \dfrac{1}{\sqrt{4k^2\frac{\omega^2}{\omega_o^2}+[1-(\frac{\omega}{\omega_o})^2]^2}}$ which is Eq. (14-18)

(b) In order to maximize $\dfrac{A_f}{A_{of}}$ we should minimise the denominator in other words:

$$\frac{d}{d\omega}[4k^2(\frac{\omega}{\omega_o})^2+(1-\frac{\omega^2}{\omega_o^2})^2]=0 \quad \text{or}$$

$$8k^2\frac{\omega}{\omega_o^2}-2(1-\frac{\omega^2}{\omega_o^2})2\frac{\omega}{\omega_o^2}=0 \quad \text{or} \quad 4\frac{\omega}{\omega_o^2}[2k^2-1+\frac{\omega^2}{\omega_o^2}]=0$$

or $\omega = \omega_o\sqrt{1-2k^2}$ (1)

Then we find the second derivative which is

$$\frac{d^2}{d\omega^2}[4k^2(\frac{\omega}{\omega_o})^2+(1-\frac{\omega^2}{\omega_o^2})^2] = \frac{12\omega^2-4\omega_o^2(1-2k^2)}{\omega_o^4} \quad (2)$$

In order to achieve minimum (2) must be greater than zero hence $\omega \le \omega_o\sqrt{\dfrac{1-2k^2}{3}}$ (3). From (3) and (2) we conclude that the peak frequency is $\omega_p = \omega_o\sqrt{1-2k^2}$. Substituting ω with ω_p in Eq. (14-18) we have

$$\frac{A_f}{A_{of}}_{\omega=\omega_p} = \frac{1}{\sqrt{(1-1+2k^2)^2+4k^2(1-2k^2)}} = \frac{1}{\sqrt{4k^4+4k^2-8k^4}} =$$

$$= \frac{1}{2k\sqrt{1-k^2}}$$

14-7 Since $A_f = \dfrac{A_{of}}{(s/\omega_o)^2+(s/\omega_o)/Q+1}$ we have, for $s=j\omega$ and $\omega/\omega_o = x$

$$\frac{A_f}{A_{of}} = \left[(\frac{j\omega}{\omega_o})^2+(\frac{j\omega}{\omega_o})/Q+1\right]^{-1} = \left[(1-x^2)+j\frac{x}{Q}\right]^{-1}$$

Thus $\text{Arg}(A_f/A_{of}) = -\arctan(\dfrac{x/Q}{1-x^2})$

Next we compile the following Table from which the graphs are plotted

x	$-\arctan\frac{x/Q}{1-x^2}$ (degrees)		
	Q=0.5 o	Q=1.5 +	Q=4.5 ●
0	-0	-0	-0
0.4	-43.6	-17.6	-6.05
0.8	-77.3	-56.0	-26.2
1.0	-90	-90	-90
1.2	-100.4	-118.8	-148.8
1.6	-115.9	-145.5	-167.1
2.0	-126.9	-156	-171.6

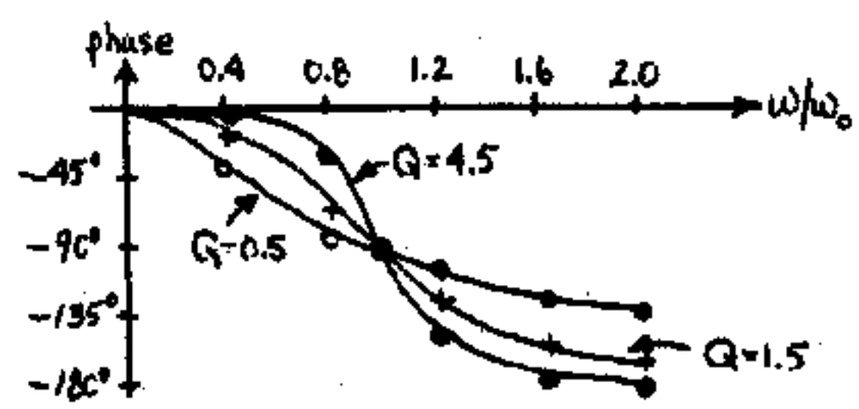

14-8 From Eq. (14-16) we can obtain the normalized gain as: $\frac{V_o(s)}{V_i(s)A_{of}} = \frac{1}{(\frac{s}{\omega_o})^2 + \frac{1}{Q}(\frac{s}{\omega_o})+1} = \frac{\omega_o^2}{s^2+2k\omega_o s+\omega_o^2}$

where we have used $2k = \frac{1}{Q}$ from Eq. (14-17).

Since $v_i(t)$ is a step input then $V_i(s) = \frac{V}{s}$ or

$\frac{V_o(s)}{VA_{of}} = \frac{\omega_o^2}{s(s^2+2k\omega_o s+\omega_o^2)}$. We know from

Eq. (14-21) that the roots of $s^2+2k\omega_o s+1$ are

$s_{1,2} = -k\omega_o \pm \sqrt{(k^2-1)\omega_o^2} = -\omega_o(k \pm \sqrt{k^2-1})$.

Underdamped case: $k \leq 1$ then

$s_{1,2} = -\omega_o k \pm j\omega_o\sqrt{1-k^2} = -\omega_o k \pm j\omega_d$, where $\omega_d = \omega_o\sqrt{1-k^2}$

from Eq. (14-22). Hence

$$\frac{V_o(s)}{VA_{of}} = \frac{\omega_o^2}{s(s^2+2k\omega_o s+\omega_o^2)}\,\frac{1}{s} - \frac{s+2k\omega_o}{s^2+2k\omega_o s+\omega_o^2} =$$

$$= \frac{1}{s} - \frac{s+2k\omega_o}{s^2+2k\omega_o s+\omega_o^2+k^2\omega_o^2-k^2\omega_o^2} =$$

$$= \frac{1}{s} - \frac{s+k\omega_o}{(s+k\omega_o)^2+\omega_o^2(1-k^2)} - \frac{k\omega_o}{(s+k\omega_o)^2+\omega_o^2(1-k^2)} =$$

$$= \frac{1}{s} - \frac{s+k\omega_o}{(s+k\omega_o)^2+\omega_d^2} - \frac{k\omega_o}{\omega_d}\,\frac{\omega_d}{(s+k\omega_o)^2+\omega_d^2} = \frac{V_o(s)}{VA_{of}} \quad (1).$$

Taking the inverse Laplace transform of (1) we

have $\frac{v_o(t)}{VA_{of}} = 1 - \epsilon^{-k\omega_o t}\cos\omega_d t - \frac{k\omega_o}{\omega_o\sqrt{1-k^2}}\epsilon^{-k\omega_o t}\sin\omega_d t =$

$= 1 - \epsilon^{-k\omega_o t}[\cos\omega_d t + \frac{k\omega_o}{\omega_d}\sin\omega_d t]$ which is Eq. (14-26).

Critically damped case: $k = 1$ then $s_1 = s_2 = -\omega_o k$

Hence using partial fraction expansion

$\frac{V_o(s)}{VA_{of}} = \frac{\omega_o^2}{s(s+\omega_o)^2} = \frac{1}{s} - \frac{\omega_o}{(s+\omega_o)^2} - \frac{1}{(s+\omega_o)}$ (2). Taking the

inverse Laplace transform we have

$\frac{v_o(t)}{VA_{of}} = 1 - \omega_o t\, e^{-\omega_o t} - e^{-\omega_o t} = 1 - (1+\omega_o t)e^{\omega_o t}$ which is

Eq. (14-23)

Overdampled case: $k > 1$ then

$s_1 = -\omega_o k + \omega_o\sqrt{k^2-1}$ and $s_2 = -\omega_o k - \sqrt{k^2-1}\,\omega_o$.

Using partial fraction expansion we have: $\frac{V_o(s)}{VA_{of}} =$

$$\frac{1}{s} + \frac{\omega_o}{2\sqrt{k^2-1}(-\omega_o k+\omega_o\sqrt{k^2-1})} \times \frac{1}{(s+\omega_o k-\omega_o\sqrt{k^2-1})}$$

$$- \frac{\omega_o}{2\sqrt{k^2-1}(\omega_o k+\omega_o\sqrt{k^2-1})} \times \frac{1}{s+\omega_o k+\omega_o\sqrt{k^2-1}} =$$

$$\frac{1}{s} - \frac{1}{2\sqrt{k^2-1}(k-\sqrt{k^2-1})} \times \frac{1}{s+\omega_o(k-\sqrt{k^2-1})} +$$

$$+ \frac{1}{2\sqrt{k^2-1}(k+\sqrt{k^2-1}} \times \frac{1}{s+\omega_o(k+\sqrt{k^2-1})}$$

Let $k_1 = k-\sqrt{k^2-1}$ and $k_2 = k\sqrt{k^2-1}$ hence

$$\frac{V_o(s)}{VA_{of}} = \frac{1}{s} - \frac{1}{2\sqrt{k^2-1}}\left(\frac{1}{k_1}\,\frac{1}{s+\omega_o k_1} - \frac{1}{k_2}\,\frac{1}{s+\omega_o k_2}\right)$$

Taking the inverse Laplace transform of (3) we

have $\frac{v_o(t)}{VA_{of}} = 1 - \frac{1}{2\sqrt{k^2-1}}(\frac{1}{k_1}\epsilon^{-k_1\omega_o t} - \frac{1}{k_2}\epsilon^{-k_2\omega_o t})$ (4)

which is Eq. (14-24). Now we assume that $k^2 \gg 1$

then $k_1 = k(1-\sqrt{1-\frac{1}{k^2}})$ and $k_2 = k(1+\sqrt{1-\frac{1}{k^2}})$. Using

Taylor's series expansion for $\sqrt{1-(1/k^2)}$ we have

$\sqrt{1-\frac{1}{k^2}} \approx 1 - \frac{1}{2k^2}$ hence $k_1 = \frac{1}{2k}$ and $k_2 = \frac{4k^2-1}{2k} = 2k$

Substituting those values of k_1 and k_2 in (4) we

have $\frac{v_o(t)}{VA_{of}} = 1 - \frac{1}{2k(1-\frac{1}{2k^2})}(2k\epsilon^{-\omega_o t/2k} - \frac{1}{2k}\epsilon^{-2k\omega_o t})$

since $2k^2 \gg 1$ then $2k\epsilon^{-\omega_o t/2k} \gg \frac{1}{2k}\epsilon^{-2k\omega_o t}$ and

$\frac{1}{2k(1-\frac{1}{2k^2})} \approx \frac{1}{2k}$ hence $\frac{v_o(t)}{VA_{of}} \approx 1 - \epsilon^{-\omega_o t/2k}$

which is Eq. (14-25).

14-9 To find the positions x_m of the maxima and minima of the oscillatory response we take the derivative of Eq. (14-26). To simplify the calculations we call $\frac{k\omega_o}{\omega_d} = \cot\varphi$ hence. $\cot\varphi = \frac{k\omega_o}{\omega_o\sqrt{1-k^2}} =$

$\frac{k}{\sqrt{1-k^2}}$ hence $\cos\varphi = k \leq 1$ for the underdamped case

with $\sin\phi = \sqrt{1-k^2}$. Thus

$$y = \frac{v_o(t)}{VA_{of}} = 1 - \epsilon^{-k\omega_o t}\cdot\frac{1}{\sqrt{1-k^2}}[\cos\varphi\sin\omega_d t + \sin\varphi\cos\omega_d t]$$

$$= 1 - \epsilon^{-k\omega_o t}\cdot\frac{1}{\sqrt{1-k^2}}\sin(\omega_d t+\varphi) \quad (1). \text{ Hence}$$

$$\frac{d}{dt}\,\frac{v_o(t)}{VA_{of}} = +k\omega_o\epsilon^{-k\omega_o t}\frac{1}{\sqrt{1-k^2}}\sin(\omega_d t+\varphi)$$

$$-\epsilon^{-k\omega_o t}\frac{1}{\sqrt{1-k^2}}\,\omega_d\cos(\omega_d t+\varphi) \qquad (2)$$

Equating (2) to zero we have: $\mathrm{Cot}(\omega_d t+\varphi) = \frac{k\omega_o}{\omega_d} =$

$\mathrm{Cot}\varphi$ (3). From (3) we conclude that

$\omega_d t = \pi m$ or $t_m = \frac{\pi m}{\omega_d}$ where $m = 0, \pm 1 \ldots$

Since $x = \frac{t}{T_o}$ then $x_m = \frac{t_m}{T_o} = \frac{\pi m}{T_o\omega_d} = \frac{\omega_o m}{2\omega_d} = \frac{m}{2\sqrt{1-k^2}}$

Substituting t_m in (1) we obtain:

$$y_m = 1 - \epsilon^{-(k/\sqrt{1-k^2})\pi m}\sin(\pi m+\varphi)\frac{1}{\sqrt{1-k^2}} =$$

$$= 1-\epsilon^{-(k/\sqrt{1-k^2})\pi m}\cos \pi m \sin\varphi \times \frac{1}{\sqrt{1-k^2}} =$$

$$= 1-\epsilon^{-(k/\sqrt{1-k^2})\pi m}(-1)^m\sqrt{1-k^2} \times \frac{1}{\sqrt{1-k^2}} =$$

$$= 1-(-1)^m\epsilon^{-(k/\sqrt{1-k^2})\pi m} = 1-(-1)^m\epsilon^{-k2\pi x_m}$$

14-10 We have shown in Prob. 14-9 that $y_m = 1-(-1)^m \times \epsilon^{-2\pi k x_m}$. We observe that y_m gives the maxima and minima of the response shown in Fig. 14-6 as a function of x_m. At $x_m \to \infty$ $y_m(\infty) = 1$ hence the percent error is given by $\frac{y_m - y_m(\infty)}{y_m(\infty)} = -(-1)^m\epsilon^{-2\pi k x_m}$. We require

$$\left|\frac{y_m - y_m(\infty)}{y_m(\infty)}\right| = \epsilon^{-2\pi k x_m} \le \frac{P}{100} \text{ or } 100\epsilon^{-2\pi k x_m} \le P$$

but $x_m = \frac{m}{2\sqrt{1-k^2}}$ hence $100\epsilon^{-\pi(km/\sqrt{1-k^2})} \le P$.

Using this inequality we can specify minimum value of m, say m_1, satisfying the inequality.

Then $x_e = \frac{m_1}{2\sqrt{1-k^2}}$

14-11 (a) We have $\omega_1 = 2$ Mrad/s and $\omega_2 = 0.5$ Mrad/s for the open loop poles. The response with the fastest rise time and no overshoot occurs for $k=1$ or $Q = 1/2k = 0.5$ where from Eq. (14-11),

$$Q = \frac{\sqrt{\omega_1\omega_2(1+\beta A_o)}}{\omega_1+\omega_2} \text{ from which } (1+\beta A_o)\frac{Q^2(\omega_1+\omega_2)^2}{\omega_1\omega_2} =$$

$$\frac{0.5^2(2+0.5)^2}{2\times 0.5} = 1.56 \text{ which is } 20\log(1.56) = \underline{3.86}$$

decibels.

(b) The rise time t_{rf} with feedback (for $k=1$) is found from Fig. 14.7. The difference in x for a rise from 10 to 90 percent of the steady state value is

$(x_2 - x_1) \approx (0.64 - 0.1) = 0.54$. Since $\omega_o = Q(\omega_1+\omega_2) =$ 1.25 Mrad/s

$t_{rf} = (t_2 - t_1) \approx 2\pi(x_2 - x_1)/\omega_o = 2\pi \times 0.54/1.25 = 2.71$ μs

To find the rise time without feedback we note that $Q = Q_{min} = \sqrt{\omega_1\omega_2}/(\omega_1+\omega_2) = \sqrt{2\times 0.5}/2.5 = 0.4$ or $k = 1/2Q = 1/0.8 = 1.25 > 1$. Hence we have the overdamped case. Since $4k^2 = 6.25$ we could use Eq. (14-25) with satisfactory results. Thus

$v_o(t)/VA_{of} = 1-e^{-\omega_o t/2k}$ which exhibits a single time constant $\tau = 2k/\omega_o$. From Eq. (13-19) $t_r = 2.2\tau = 4.4k/\omega_o$ where from Eq. (14-11) $\omega_o = \sqrt{\omega_1\omega_2(1+\beta A_o)} = \sqrt{\omega_1\omega_2}$ since we consider the case without feedback. Thus $t_r = 4.4k/\sqrt{\omega_1\omega_2} =$ $4.4 \times 1.25/\sqrt{2\times 0.5\times 10^{12}} = 5.5\times 10^{-6} = 5.5$ μs

Thus $t_{rf}/t_r = 2.71/5.5 = \underline{0.49}$

14-12 (a) Since $-20\log(1+\beta A_o) = -31.84$, $\log(1+\beta A_o) = 1.592$ or $(1+\beta A_o) = 39.08$

Use Eq. (14-11) to find Q(or k):

$$Q = \omega_o/(\omega_1+\omega_2) = \sqrt{\omega_1\omega_2(1+\beta A_o)}/(\omega_1+\omega_2) \qquad (1)$$

Thus $Q = \sqrt{2\times 0.5\times 39.08}/(2+0.5) = 2.5$; $k = 1/2Q = 0.2$

Clearly we have an underdamped response, since $k < 1$. The rise time can be found from Fig. 14-7 from which we see that x changes from about 0.06 to about 0.26 for a rise of the output from 10 to 90% of its steady state value. Thus the rise time t_r is

$$t_r = \frac{2\pi\Delta x}{\omega_o} = \frac{2\pi(0.26-0.06)}{\sqrt{\omega_1\omega_2(1+\beta A_o)}} = \frac{2\pi\times 0.2}{\sqrt{2\times 0.5\times 10^{12}\times 39.08}} \approx$$

2×10^{-7} s = 0.2 μs

(b) From Fig. 14-7 we see that the overshoot is about 53%.

14-13 We have $f_1 = 12$ MHz and $f_2 = 2$ MHz.

(a) From Eq. (14-27), the formula for the overshoot is $x_1 = \exp[-\pi k/\sqrt{1-k^2}]$. We require that $x_1 \le 0.05$ thus $-\pi k/(1-k^2)^{1/2} \le \ln(0.05) = -3.0$

$\frac{k^2}{1-k^2} \ge (\frac{3.0}{\pi})^2 = 0.91$. Thus $k^2 \ge 0.48$ and $k \ge 0.69$

For the maximum value of the loop gain we choose $k = 0.69$, for which $Q = 1/2k = 0.72$. Using Eq. (14-11) $\omega_o = Q(\omega_1+\omega_2) = 0.72(12+2) = 10.1$ MHz and $(1+\beta A_o) = \omega_o^2/\omega_1\omega_2 = 10.1^2/12\times 2 = 4.25$. Thus the largest value of loop gain is $\underline{3.25 = \beta A_o}$.

(b) Here we use Eq. (14-27) to find the time t_1 at which the first peak occurs. Thus

$t_1 = 2\pi/\omega_o 2(1-k^2)^{1/2} = 2\pi/10.1\times 10^6\times 2\times(1-0.48)^{1/2} = 0.43$ μs

(c) This occurs with $m=2$ in Eq. (14-27). It occurs at $t_2 = 2\pi/\omega_o(1-k^2)^{1/2} = 2\pi/10.1\times 10^6\times(1-0.48)^{1/2} =$ $\underline{0.855\ \mu s}$, for which the normalized variable x_2 is $x_2 = \omega_o t_2/2\pi = 10.1\times 0.86/2\pi = 1.38$. The value at this instant is, from Eq. (14-27),

$y_2 = 1-(-1)^2\exp(-2\pi x_2) = 1-\exp(-8.67) = 1-0.002 = \underline{0.998}$

(d) The overshoot is $\exp[-\pi k/(1-k^2)^{1/2}]$ $= \exp[-\pi\times 0.6/(1-0.6^2)^{1/2}] = 0.0947 \approx 9.5$ %

14-14 (a)

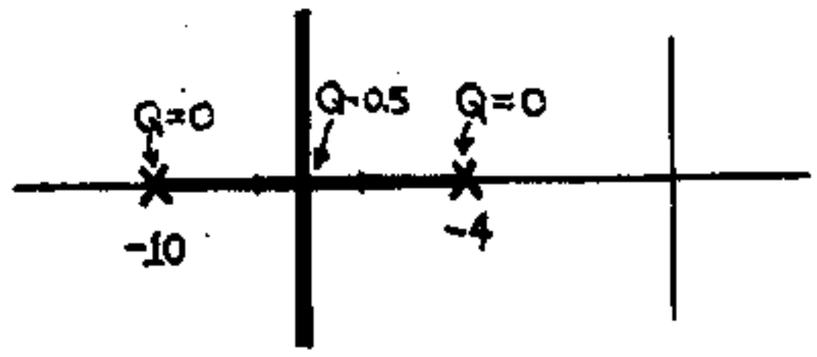

See also Fig. 14-3.

(b) From Prob. (14-13), this overshoot occurs for $k = 0.6$, for which $Q = 1/2k = 0.833$. Using Eq. (14-11)

$(1+\beta A_o) = \omega_o^2/\omega_1\omega_2 = Q^2(\omega_1+\omega_2)^2/\omega_1\omega_2 =$
$0.833^2(10+4)^2/10\times 4 = 3.4$. Thus $\beta A_o = 2.4$.

14-15 (a) From Eq. (14-27) $y_1 = \exp(-\pi k/(1-k^2)^{1/2}) =$
$\exp(-\pi\times 0.707/(1-0.5)^{1/2}) = 0.043 = \underline{4.3\%}$

(b) From Eq. (14-20), $\dfrac{1}{2k(1-k^2)^{1/2}} - 1 = 0.05$ Thus
$4k^2(1-k^2) = 1/1.05^2 = 0.907$ or $-k^4+k^2 = 0.227$ or
$k^4-k^2+0.227 = 0$. The two roots for $x = k^2$ are
$x_{1,2} = \frac{1}{2} \pm \sqrt{0.25-0.227} = 0.5 \pm 0.152$
$x_1 = 0.652$ $x_2 = 0.348$ from which
$k_1 = x_1^{1/2} = 0.807$ and $k_2 = x_2^{1/2} = 0.590$
For k_1 the time overshoot is, from Eq. (14-27),
$y_1 = \exp(-\pi k_1/(1-k_1^2)^{1/2}) = \exp(-\pi\times 0.807/(1-0.652)^{1/2}) =$
$0.0136 = 1.36\%$
For k_2 the time overshoot is $y_1' =$
$\exp(-\pi k_2/(1-k_2^2)^{1/2}) = \exp(-\pi\times 0.590/(1-0.348)^{1/2}) =$
$0.101 = \underline{10.1\%}$.

14-16 From Eq. (14-13) the poles for the closed loop amplifier are $s = -\dfrac{\omega_1+\omega_2}{2} \pm \dfrac{\omega_1+\omega_2}{2}\sqrt{1-4Q^2}$ but
$s = -\sigma \pm j\omega$ hence $\sigma = \dfrac{\omega_1+\omega_2}{2}$ and $\pm\omega = \pm\sigma\sqrt{4Q^2-1}$
hence $\sqrt{4Q^2-1} = \left|\dfrac{\omega}{\sigma}\right|$

14-17 From Eq. (14-28) the open loop gain is

$$A(s) = \frac{A_o}{(1+\frac{s}{\omega_1})(1+\frac{s}{\omega_2})(1+\frac{s}{\omega_3})} \quad \text{hence}$$

$$A_f(s) = \frac{A_o}{(1+\frac{s}{\omega_1})(1+\frac{s}{\omega_2})(1+\frac{s}{\omega_3}) + \beta A_o} \quad \text{then}$$

$$A_f(s) = \frac{A_o}{\frac{s^3}{\omega_1\omega_2\omega_3} + (\frac{1}{\omega_1\omega_2}+\frac{1}{\omega_2\omega_3}+\frac{1}{\omega_3\omega_1})s^2 + (\frac{1}{\omega_1}+\frac{1}{\omega_2}+\frac{1}{\omega_3})s + 1 + \beta A_o}$$

$$= \frac{A_{of}}{\frac{1}{\omega_1\omega_2\omega_3(1+\beta A_o)}s^3 + \frac{(\omega_1+\omega_2+\omega_3)}{\omega_1\omega_2\omega_3(1+\beta A_o)}s^2 + \frac{(\omega_2\omega_3+\omega_3\omega_1+\omega_1\omega_2)}{\omega_1\omega_2\omega_3(1+\beta A_o)}s + 1} \quad (1)$$

Let $\omega_o^3 = \omega_1\omega_2\omega_3(1+\beta A_o)$, $a_2 = \dfrac{\omega_1+\omega_2+\omega_3}{\omega_o}$ and
$a_1 = \dfrac{\omega_2\omega_3+\omega_3\omega_1+\omega_1\omega_2}{\omega_o^2}$; then (1) becomes

$$A_f(s) = \frac{A_{of}}{(\frac{s}{\omega_o})^3 + a_2(\frac{s}{\omega_o})^2 + a_1(\frac{s}{\omega_o}) + 1}$$

14-18 (a) The open-loop transfer function is $A(s) = \dfrac{A_o}{(1+s/\omega_1)^3}$. Thus

$$A_f(s) = \frac{A(s)}{1+\beta A(s)} = \frac{\frac{A_o}{(1+s/\omega_1)^3}}{1+\frac{\beta A_o}{(1+s/\omega_1)^3}} = \frac{A_o}{(1+s/\omega_1)^3+\beta A_o}$$

(b) We observe the behavior of the closed-loop poles as the amount of feedback varies. These poles are the roots of $(1+s/\omega_1)^3+\beta A_o = 0$. Thus
$(1+s/\omega_1)^3 = -\beta A_o = \beta A_o = \beta A_o \exp(j\pi + j2n\pi)$, $n = 0, \pm 1, \pm 2, \ldots$
or

$$\frac{1+s/\omega_1}{(\beta A_o)^{1/3}} = \exp j(\frac{\pi+2n\pi}{3}) = \begin{cases} \exp(j\pi/3) & n = 0 \\ \exp(j\pi) = -1 & n = 1 \\ \exp(-j\pi/3) & n = -1 \end{cases}$$

The values of the exponentials for the other values of n repeat these three values. Thus the three closed-loop poles s_{1f}, s_{2f} and s_{3f} satisfy the following equations:

$s_{3f} = -\omega_1(1+(\beta A_o)^{1/3})$
$s_{2f} = -\omega_1(1-(\beta A_o)^{1/3}\exp(j\pi/3)) =$
$-\omega_1(1-0.5(\beta A_o)^{1/3}) + j\omega_1(\beta A_o)^{1/3}\sqrt{3}/2$

Notice that s_{1f} is the complex conjugate of s_{2f}. From the above equations we note that s_{3f} stays along the neg. real axis and moves away from $-\omega_1$ as the feedback increases. Note also that s_{3f} and s_{2f} start at $-\omega_1$ when $\beta = 0$ and their real part moves toward the right-hand complex plane as feedback increases. The root locus is shown below:

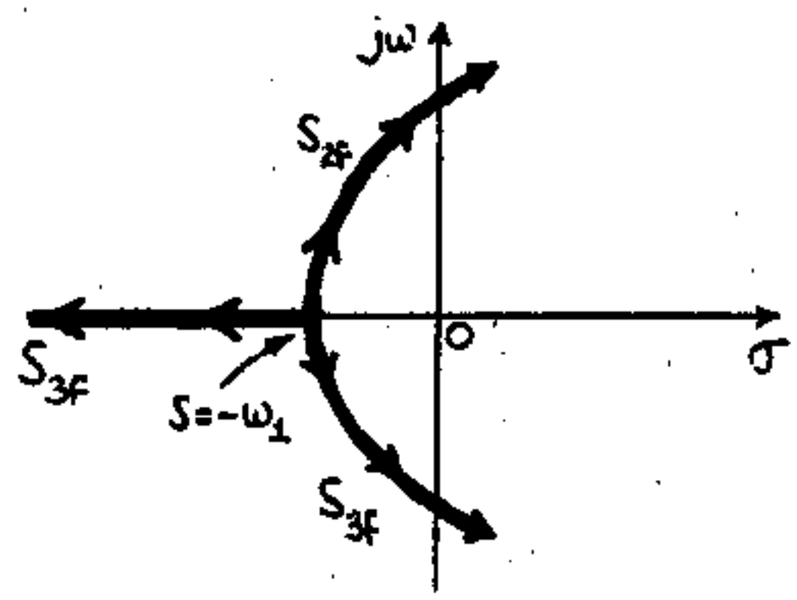

(c) The system is unstable if the closed-loop poles are in the right-hand plane. The poles s_{1f} and s_{2f} cross into the right-hand plane when their real part is zero, or
$1-0.5(\beta A_o)^{1/3} = 0$ or $\beta A_o = 8$

If $\beta A_o > 8$, then these poles move further into the right-hand plane and the system is unstable.
Now, when $\beta A_o = 8$ we have
$s_{3f} = -\omega_1(1+2) = -3\omega_1$ and
$s_{2f} = -3s_{1f} = j\omega_1 2\sqrt{3}/2 = j\omega_1\sqrt{3}$ Q. E. D.

14-19 $A(s) = A_1/s(s+2)^2$. Thus the transfer function of the amplifier with feedback is

$$A_f(s) = \frac{A(s)}{1+\beta A(s)} = \frac{A_1}{s^3+4s^2+4s+\beta A_1}$$

The closed-loop poles are the roots of the

denominator.

(a) Since the denominator polynomial has real coefficients, we have the following two possibilities for the roots: (i) All three are real (ii) one is real and the other two are complex conjugate. Thus it is clear that at the breakaway point the roots are all real and at least two of them (those that will become a complex conjugate pair) are equal. Thus the denominator can be written: $(s-a)(s-b)^2 = s^3+(-a-2b)s^2+(b^2+2ab)s-ab^2$. Equating the coefficients of equal powers of s (compare with the denominator of $A_f(s)$) we obtain

$a + 2b = -4 \quad b^2 + 2ab = 4 \quad -ab^2 = \beta A_1$

From the first eq. $a = -4-2b$ and substituting this in the second eq. we have: $b^2+2(-4-2b)b = 4$ or $3b^2+8b+4 = 0$.

Thus $b = (-8 \pm \sqrt{64-48})/6$ The two possibilities are $b_1 = -2$ and $b_2 = -2/3$.

With $b = -2$, $a = -4-2b = 0$ and $\beta A_1 = 0$ (this is the case of two equal roots in the absence of feedback). With $b = -2/3$, $a = -4+2\times 2/3 = -2.667$ and $\beta A_1 = -ab^2 = \underline{+1.185}$.

(b) At the point where the system turns from stable to unstable, two of the roots are purely imaginary. If the roots are $-d$, $+j\omega$ and $-j\omega$, the denominator can be written: $(s+d)(s-j\omega)(s+j\omega) = (s+d)(s^2+\omega^2) = s^3+ds^2+\omega^2 s+d\omega^2$. Equating coefficients of equal powers of s:

$d = 4 \quad \omega^2 = 4$ and $\beta A_1 = d\omega^2 = \underline{16}$

At that point two closed-loop poles are at $\pm j\omega = \pm j2$

(c)

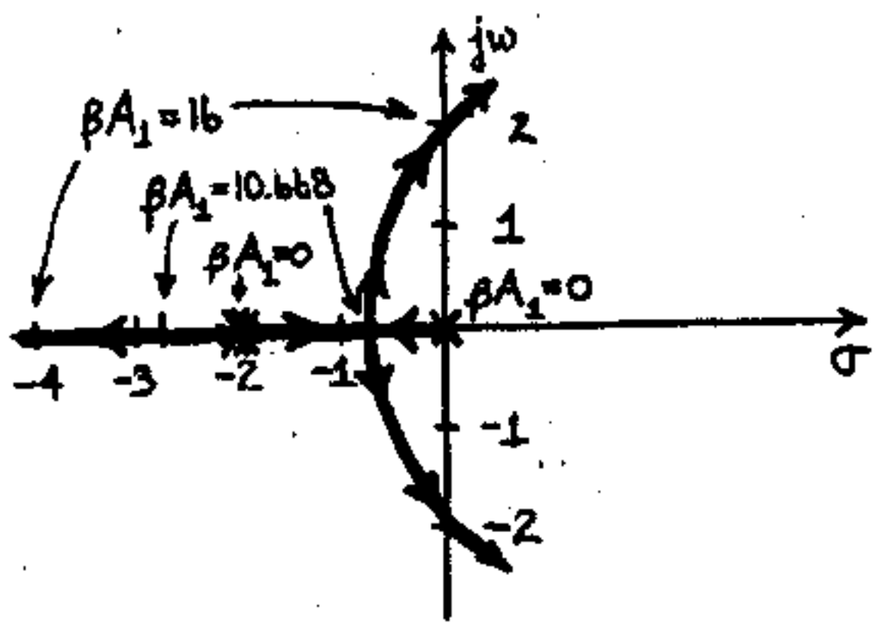

14-20 Since we have a complex pair, the other root is real (because we know that the coefficients of the denominator polynomial whose roots are s_1, s_2 and s_3 are all real). Thus $s_1 = -2$, $s_2 = -a+jb$ and $s_3 = -a-jb$. Now, since $|s_2| = 2$, we have $\sqrt{a^2+b^2} = 2$ or $a^2+b^2 = 4$ (1)

The denominator can be written:

$(s+2)(s+a-jb)(s+a+jb) = (s+2)(s^2+2as+a^2+b^2) = (s+2)(s^2+2as+4)$.

Next we compare the second term with the the denominator of Eq. (14-10), which we repeat here for convenience: $(s/\omega_o)^2+(1/Q)(s/\omega_o)+1$. Put the second term in this form by dividing the constant term by 4: $(s/2)^4+a(s/2)+1$. From this we have: $\omega_o = 2$, $a = 1/Q = 1/2 = 0.5$ Thus the quadratic term becomes $s^2+s+4 = 0$ with roots $(-1 \pm \sqrt{1-16})/2 = -\frac{1}{2} \pm j\frac{\sqrt{15}}{2}$

14-21 $$A(s) = \frac{2A_o \times 10^{-5}}{(s+0.01)(s+0.02)(s+0.1)}$$

Thus $$A_f(s) = \frac{A(s)}{1+\beta A(s)} = \frac{2A_o \times 10^{-5}}{(s+0.01)(s+0.02)(s+0.1)+2\beta A_o \times 10^{-5}}$$

$$= \frac{2A_o \times 10^{-5}}{s^3+0.13s^2+0.0032s+2(1+\beta A_o)\times 10^{-5}} = \frac{N}{D(s)} \qquad (1)$$

Since two of the roots of the denominator are complex conjugate, the other must be real. Thus, if we denote the roots by $-c$, $-a \pm jb$, the denominator becomes $(s+c)(s+a-jb)(s+a+jb) = (s+c)(s^2+2as+a^2+b^2)$ (2)

We now write the denominator of Eq. (14-10) in a form in which s^2 has coefficient unity, to compare it with the quadratic above: $s^2+(\omega_o/Q)s+\omega_o^2$. This comparison yields $\omega_o^2 = a^2+b^2$ and $2a = \omega_o/Q = \omega_o$

From these, $b = \sqrt{\omega_o^2-a^2} = \sqrt{\omega_o^2-(\omega_o/2)^2} = \omega_o\sqrt{3}/2 = \sqrt{3}\,a$

Thus, we have from eq. (2)

$D(s) = (s+c)(s^2+2as+4a^2) = s^3+(c+2a)s^2+(4a^2+2ac)s + 4a^2c$ (3)

Equating coefficients of equal powers of s in D(s) of eq's (1) and (3) we have:

$c+2a = 0.13$

$4a^2+2ac = 0.0032 = 2a(2a+c) = 2a \times 0.13$

$4a^2c = 2(1+\beta A_o)\times 10^{-5}$

From the second of these equations, we have

$a = 0.0032/(2\times 0.13) = 0.01231$

From the first one, $c = 0.13-2a = 0.13-2\times 0.01231 = 0.1054$

Finally, from the third one, $(1+\beta A_o) = 4a^2c/(2\times 10^{-5}) = 2\times 10^5 a^2c = 2\times 10^5 \times (0.01231)^2 \times 0.1054 = 3.194$ and

$\beta A_o = \underline{2.194}$

Thus the roots are: $-c = -0.1054$, $-a+jb = -0.01231+j\sqrt{3}\times 0.01231 = -0.01231+j0.02132$, and $-0.01231-j0.02132$.

14-22 (a) A 2-pole amplifier has a dominant pole if the ratio of the pole is such that $n = \left|\frac{s_{2f}}{s_{1f}}\right| \geq 4$. From

Eq. (14-13) we know that $s_{1f} = -\frac{\omega_1+\omega_2}{2}(1-\sqrt{1-4Q^2})$ and $s_{2f} = -\frac{\omega_1+\omega_2}{2}(1+\sqrt{1-4Q^2})$ hence a dominant pole will exist iff. $\frac{1+\sqrt{1-4Q^2}}{1-\sqrt{1-4Q^2}} \geq 4$ or $1+\sqrt{1-4Q^2} \geq 4-4\sqrt{1-4Q^2}$ hence $25(1-4Q^2) \geq 9$ or $1-\frac{9}{25} \geq 4Q^2$ or $Q^2 \leq \frac{16}{100}$ or $Q \leq 0.4$. We conclude that dominant pole exists iff $Q \leq 0.4$.

(b) From Eq. (14-31), when dominant pole exists, we have $Q^2 = \frac{n}{(n+1)^2}(1+\beta A_o) \leq 0.16$ hence $\beta A_o \leq \frac{(n+1)^2 \times 0.16}{n} - 1$ hence $(\beta A_o)_{max} = \frac{0.16(n+1)^2}{n} - 1$

(c) n=4 then from part (b) we have $\beta A_o \leq \frac{25 \times 0.16}{4} - 1 = 0$ or $\beta A_o \leq 0$ for dominant pole to exist. Note that for negative feedback it is required that $\beta A_o > 0$. Notice that n=4 means that we just barely have a dominant pole for the open loop amplifier (that is the open loop poles are exactly 2 octaves apart). Hence if any negative feedback

(c) Without feedback GB_o = gain bandwidth product $= A_o \times 1$ MHz. When feedback is applied the mid-band gain is

$A_o/1+\beta A_o = A_o/1+0.8 = A_o/1.8$ and

$GB = (A_o/1.8) \times 2$ MHz $= A_o \times 1.11$ MHz. Thus, it seems that product increased with the application of feedback.

(d) If, however, we use Eq. (13-92) we have $\frac{1}{f_{Hf}} = 1.1\sqrt{\frac{1}{2^2}+\frac{1}{9^2}}$ or $f_{Hf} = 1.775$ MHz. Now $GB = (A_o/1.8) \times 1.775$ MHz $\approx A_o \times 1$ MHz, as without feedback.

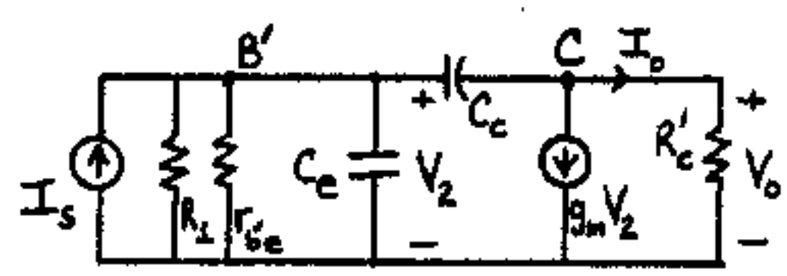

The equivalent circuit of Fig. 14-9(b) when we apply Norton's theorem to the left of B' is as indicated where $R_1 = (R_s \| R') + r_{bb'}$.

$R \| R'$

(Constant term) $= G_1 + g_{b'e} = 0.132 + 1 = 1.132$ mA/V $= 1.132\times10^{-3}$ mho

$$R_M = \frac{-3.49\times10^{3}(50\times10^{-3} - 3\times10^{-12}\,s)}{1.06\times10^{-18}s^2 + 644.5\times10^{-12}\,s + 1.132\times1.132\times10^{-3}} \quad (1)$$

The zero is at $s = (50\times10^{-3})/(3\times10^{-12}) = 16.67\times10^{9}$

The two poles are at

$$\frac{-644.5\times10^{-12} \pm \sqrt{(644.5\times10^{-12})^2 - 4\times1.06\times10^{-18}\times1.132\times10^{-3}}}{2\times1.06\times10^{-18}}$$

or $s_1 = -6.06\times10^{8}$, and $s_2 = -1.76\times10^{6}$. The latter is a dominant pole, and we check to see if $Q \le Q_{max} = 0.4$ for a dominant pole after feedback has been applied. The midband transresistance R_{Mo} is found from (1) with $s = 0$. Thus

$$R_{Mo} = \frac{-3.49\times10^{9}\times50\times10^{-3}}{1.132\times10^{-3}} = 1.54\times10^{5}\,\Omega = 154\ \text{k}\Omega$$

and with $\beta = -1/R' = 1/30$ mA/V, we have $1+\beta R_{Mo} = 1 + 154/30 = 6.13$. Since $n = \frac{606}{1.76} = 344$, we have, from Eq. (14-31)

$$Q^2 = \frac{n}{(n+1)^2}(1+\beta R_{Mo}) = \frac{344\times6.13}{(345)^2} = 0.0177$$

Since $Q = 0.133 < Q_{max} = 0.4$, a dominant pole is still present and the corresponding 3-dB frequency is given by Eq. (14.33) since $4Q^2 \ll 1$.

$$f_{Hf} = f_H\,\frac{n}{n+1}(1+\beta R_{Mo})(1+Q^2) = \frac{|s_2|}{2\pi}\,\frac{344}{345}\,6.13(1+0.0177)$$

$$= \underline{1.74\times10^{6}\ \text{Hz}}$$

(Note that Eq. (14-7) gives a good approximation here:

$$f_{Hf} = (1+\beta R_{Mo})f_H = 6.13\times1.76\times10^{6}/2\pi = 1.72\times10^{6}\ \text{Hz}.$$

This is because the open-loop poles are so widely separated so that we can consider the amplifier to be a single-pole one).

14-27 The Norton's equivalent circuit to the left of B' in Fig. 14-11(b) is as indicated,

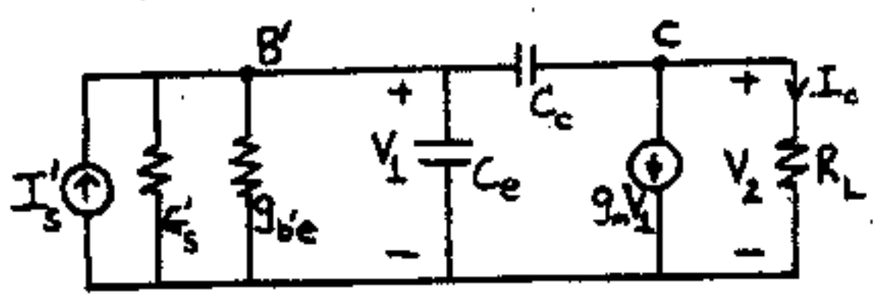

where $I'_s = V_s \cdot G'_s$ and $G'_s = \frac{1}{R_s + R_e + r_{bb'}}$ and

$R_L = R_e + R_c = \frac{1}{G_L}$

We write the nodal equations for the nodes B' and C and we have

$$\begin{aligned} I'_s &= [G'_s + g_{b'e} + s(C_e + C_c)]V_1 - sC_cV_2 \\ 0 &= (g_m - sC_c)V_1 + (G_L + sC_c)V_2 \end{aligned} \quad (1)$$

Solving the system (1) for V_2 we obtain

$$V_2 = \frac{-I'_s(g_m - sC_c)}{[G'_s + g_{b'e} + s(C_e + C_c)][G_L + sC_c] + sC_c(g_m - sC_c)} \quad \text{or}$$

$$\frac{I_o\times R_L}{V_s\times G'_s} = \frac{-(g_m - sC_c)}{[G'_s + g_{b'e} + s(C_e + C_c)][G_L + sC_c] + sC_c(g_m - sC_c)} \quad \text{or}$$

$$G_M = \frac{I_o}{V_s} = \frac{-G'_s(g_m - sC_c)}{\dfrac{G'_s + g_{b'e} + s(C_e + C_c) + (G'_s + g_{b'e})R_LC_cs + s^2R_LC_eC_c + s^2R_LC_c^2 + sR_Lg_mC_c - s^2C_c^2R_L}{}} =$$

$$= \frac{-G'_s(g_m - sC_c)}{s^2R_LC_cC_e + s[C_e + C_c + R_LC_c(g_{b'e} + g_m + G'_s)] + G'_s + g_{b'e}}$$

14-28 We use Eq. (14-40) with the following numerical values:

$R_L = R_e + R_c = 0.2 + 1 = 1.2$ kΩ

$G'_s = 1/R'_s = (R_s + r_{bb'} + R_e)^{-1} = (50+100+200)^{-1} = 2.86$ mA/V

Thus we have for the denominator of Eq. (14-40):

(Coefficient of s^2) $= C_eC_cR_L = 100\times10^{-12}\times3\times10^{-12}\times1.2\times10^{3} = 3.6\times10^{-19}\ F^2\,\Omega$

(Coefficient of s) $= C_e + C_c + C_cR_L(g_m + g_{b'e} + G'_s) = 100\times10^{-12} + 3\times10^{-12} + 3\times10^{-12}\times1.2(50+1+2.86) = 296.9\times10^{-12}$ F

(Constant term) $= G'_s + g_{b'e} = (2.86+1)\times10^{-3} = 3.86\times10^{-3}$ mho. Thus

$$G_M = \frac{-2.86\times10^{-3}(50\times10^{-3} - 3\times10^{-12}\,s)}{3.6\times10^{-19}s^2 + 296.9\times10^{-12}s + 3.86\times10^{-3}} \quad (1)$$

The zero occurs at $s = (50\times10^{-3})/(3\times10^{-12}) = 16.67\times10^{9}$.

The two poles occur at

$$\frac{-296.9\times10^{-12} \pm \sqrt{(296.9\times10^{-12})^2 - 4\times3.6\times10^{-19}\times3.86\times10^{-3}}}{2\times3.6\times10^{-19}},$$

or at $s_2 = -8.115\times10^{8}$ and $s_1 = -1.319\times10^{7}$.

Clearly $s_2/s_1 > 4$ and s_1 is a dominant pole of the open-loop system. Next we check for the presence of a dominant pole after feedback has been applied. Thus we check if $Q^2 < Q^2_{max} = 0.16$. We want to use Eq. (14-31) for which we need:

$$1+\beta G_{Mo} = 1 + (-R_e)(G_M)_{at\ s=0} =$$

$$1 + (-200)\frac{-2.86\times10^{-3}\times50\times10^{-3}}{3.86\times10^{-3}} = 8.409$$

and $n = s_2/s_1 = 61.52$

Then, from Eq. (14-31) $Q^2 = n(1+\beta G_{Mo})/(n+1)^2 = 61.52\times8.409/62.52^2 = 0.132 < Q^2_{max} = 0.16$. Thus a dominant closed-loop pole does exist, and the corresponding 3-dB frequency is given by Eq. (14-32)

$f_{Hf}=f_H(n+1)(1-\sqrt{1-4Q^2})/2$ where $f_H=|s_1|/2\pi=2.1$ MHz

Thus $f_{Hf}=2.1\times 6\ 2.52\times(1-\sqrt{1-4\times 0.132})/2=\underline{20.55\ \text{MHz}}$

14-29 The two lowest poles for the open loop amplifier are $s_1=-24.4\times10^5$ and $s_2=-26.8\times10^7$ rad/sec hence from Eq. (14-30) $n=\frac{s_2}{s_1}=\frac{26.8\times10^7}{24.4\times10^5}=110>>1$.

We notice also that $\frac{s_3}{s_2}>4$ and $\frac{s_4}{s_2}>4$. From Chap. 13 for this configuration we know that

$\beta=\frac{V_f}{V_o}=\frac{R_1}{R_1+R_2}=\frac{0.1}{4.8}$ and $A_{V_o}=834$

hence $1+\beta A_{V_o}=18.4$ hence from Eq. (14-31) we have $4Q^2=\frac{4n(1+\beta A_{V_o})}{(n+1)^2}=\frac{440\times 18.4}{1.23\times10^4}=0.657$.

Since this value is only slightly larger than $4Q^2(\text{max})=0.64$ we shall assume that we do indeed have a dominant pole. In reality the second pole will be slightly less than two octaves away. Then we have

$f_1=-\frac{s_1}{2\pi}=\frac{24.4\times10^5}{6.28}=0.389$ MHz and from Eq. (14-32) we have $f_{Hf}=\frac{f_1(n+1)}{2}[1-\sqrt{1-4Q^2}]=\frac{0.389\times111}{2}(1-\sqrt{1-0.657})=8.95$ MHz. Notice $f_{2f}=\frac{0.389\times111}{2}1.586=34.2$ MHz hence $\frac{f_{2f}}{f_{Hf}}=\frac{34.2}{8.95}=3.82$ slightly less than 4 or less than two octaves. Finally

$A_{Vof}=\frac{A_{V_o}}{1+\beta A_{V_o}}=\frac{834}{18.4}=45.3$ hence

$A_{Vf}=\frac{A_{Vof}}{1+jf/f_{Hf}}=\frac{45.3}{1+j\,f/8.95}$ where f is in megaherts.

14-30 (a) The n-pole transfer function is given by a generalization of Eq. (14-55), or

$$\frac{A(jf)}{A_o}=\frac{1}{(1+jf/f_{p1})(1+jf/f_{p2})\ldots(1+jf/f_{pn})} \qquad (1)$$

where $f_{p1}, f_{p2}, \ldots, f_{pn}$ are the frequencies corresponding to the n poles. Hence

$$|A/A_o|=1/(1+f^2/f_{p1}^2)^{1/2}\ldots(1+f^2/f_{pn}^2)^{1/2}$$

and

$$20\log|A/A_o|=-20\log[(1+f^2/f_{p1}^2)^{1/2}\ldots(1+f^2/f_{pn}^2)^{1/2}]=$$
$$-20\log(1+f^2/f_{p1}^2)^{1/2}-\ldots-20\log(1+f^2/f_{pn}^2)^{1/2}$$

Comparing this with Eq. (14-49) we see that the (normalized) gain in decibels is the sum of the gains in decibels of the n individual poles, Q.E.D.

(b) Let $(1+jf/f_{pk})=A_k\exp(jx_k)$ where $x_k=\arctan(f/f_{pk})$ and $A_k>0$, for $k=1,2,\ldots,n$. (2)

Thus, from (1)

$$\frac{A(jf)}{A_o}=\frac{1}{A_1\exp(jx_1)\ldots A_n\exp(jx_n)}$$
$$=\frac{1}{A_1\ldots A_n\exp j(x_1+\ldots+x_n)}$$
$$=\frac{1}{A_1\ldots A_n}\exp(-j(x_1+\ldots+x_n))$$

Thus $\arg(A/A_o)=-(x_1+x_2+\ldots+x_n)=$
$-\arctan(f/f_{p1})-\arctan(f/f_{p2})-\ldots-\arctan(f/f_{pn})$

This proves what we set out to prove (simply compare with Eq. (14-51), which gives the contribution at a single pole).

(c) The transfer function now is

$$\left(\frac{A}{A_o}\right)=\frac{(1+jf/f_{z1})\ldots(1+jf/f_{zm})}{(1+jf/f_{p1})\ldots(1+jf/f_{pn})} \qquad (3)$$

(i) Magnitude:

$$\left|\frac{A}{A_o}\right|=\frac{(1+jf^2/f_{z1}^2)^{1/2}\ldots(1+jf^2/f_{zm}^2)^{1/2}}{(1+jf^2/f_{p1}^2)^{1/2}\ldots(1+jf^2/f_{pn}^2)^{1/2}}$$

and $20\log|A/A_o|=20\log(1+jf^2/f_{z1}^2)^{1/2}+\ldots+$
$+20\log(1+jf^2/f_{zm}^2)^{1/2}-20\log(1+jf^2/f_{p1}^2)-\ldots-$
$-20\log(1+jf^2/f_{pn}^2)^2$

Thus, again, the gain (in decibels) is the sum of the contributions of the gains (in decibels) of the individual poles and zeros.

(ii) Phase: Let $(1+jf/f_{zk})=B_k\exp(jy_k)$ where $B_k>0$ and $y_k=\arctan(f/f_{zk})$, $k=1,2,\ldots,m$

Thus, $\frac{A}{A_o}=\frac{B_1B_2\ldots B_m\exp j(y_1+y_2+\ldots+y_m)}{A_1A_2\ldots A_n\exp j(x_1+x_2+\ldots+x_n)}=$

$$\frac{B_1B_2\ldots B_m}{A_1A_2\ldots A_n}\exp j(y_1+y_2+\ldots y_m-x_1-x_2-\ldots-x_n)$$

and $\arg(A/A_o)=y_1+y_2+\ldots+y_m-x_1-x_2-\ldots-x_n=$
$\arctan(f/f_{z1})+\ldots+\arctan(f/f_{zm})-\arctan(f/f_{p1})-\ldots-$
$-\arctan(f/f_{pn})$

Again, the overall phase is the sum of the contributions of the individual poles and zeros.

14-31 (a) To pole the true Bode magnitude plot we use Eq. (14-53) A in dB $=20\log|A_0|-10\log(1+\frac{f^2}{f_{p1}^2})$ $-10\log(1+\frac{f^2}{f_{p2}^2})$ where $f_{p2}=4f_{p1}$. To find the 3 dB frequency of this circuit (f_H) we equate $\frac{|A|}{|A_0|}$ to $\frac{1}{\sqrt{2}}$ or

$$\frac{1}{\left[\left(1+\frac{f_H^2}{f_{pl}^2}\right)\left(1+\frac{f_H^2}{16f_{pl}^2}\right)\right]^{\frac{1}{2}}} = \frac{1}{\sqrt{2}} \text{ or } \left(1+\frac{f_H^2}{f_{pl}^2}\right)\left(1+\frac{f_H^2}{16f_{pl}^2}\right) = 2$$

$$\text{or } \frac{1}{16}\left(\frac{f_H}{f_{pl}}\right)^4 + \frac{17}{16}\left(\frac{f_H}{f_{pl}}\right)^2 = 1 \text{ or } f_H \sim 0.945\, f_{pl}$$

Now we construct a table of values of $|A|$ in dB for different f using Eq. (14-53) and denoting $K_1 = 20\log|A_o|$

f/f_{pl}	0.5	0.9	1	2	3
$\|A\|$ in dB	K_1-1.03	K_1-2.8	K_1-3.28	K_1-7.57	K_1-11.94

f/f_{pl}	4	10
$\|A\|$ in dB	K_1-15.31	K_1-28.64

Using this table we draw the true Bode magnitude plot as indicated below, from which we find $f_H = 0.95\, f_{pl}$ (see dotted line), in close agreement with the value obtained above. On the same graph we indicate also the idealized Bode magnitude plot.

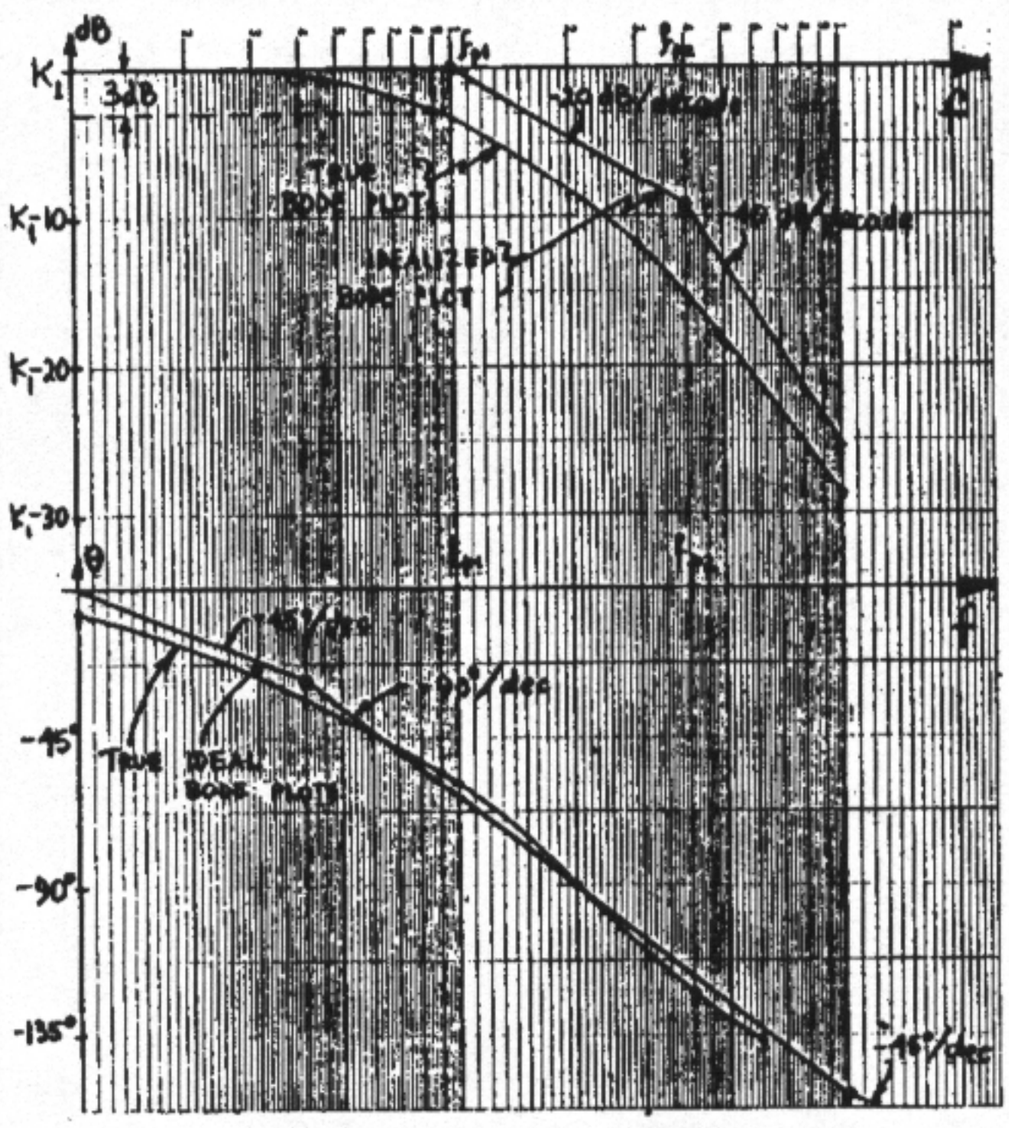

(b) Using Eq. (14-54) namely $\theta = -\arctan\frac{f}{f_{pl}} - \arctan\frac{f}{f_{p2}}$ where $f_{p2} = 4\, f_{pl}$ we find θ for different values of f

f/f_{pl}	0.1	0.5	0.9	2	3
θ	-7.14°	-33.6°	-59°	-90°	-108.5°

f/f_{pl}	4	6	10
θ	-121.°	-136.9°	-152.3°

Using this table we draw the true Bode phase plot as indicated above. On the same graph we indicate the idealized Bode phase plot.

14-32 (a) To plot the true Bode magnitude plot we use Eq. (14-53) $|A|\,dB = 20\log|A| = 20\log|A_o| - 10\log\left(1+\frac{f^2}{f_{pl}^2}\right) - 10\log\left(1+\frac{f^2}{f_{p2}^2}\right)$ where $f_{p2} = 2\, f_{pl}$.

Then for $20\log|A| - 20\log|A_o| = -3\,dB$

we have $\left[\frac{1}{\left(1+\frac{f_H^2}{f_{pl}^2}\right)\left(1+\frac{f_H^2}{4f_{pl}^2}\right)}\right]^{\frac{1}{2}} = \frac{1}{\sqrt{2}}$ or

$$\left(1+\frac{f_H^2}{f_{pl}^2}\right)\left(1+\frac{f_H^2}{4f_{pl}^2}\right) = 2 \quad \text{or} \quad \frac{1}{4}\left(\frac{f_H}{f_{pl}}\right)^4 + \frac{5}{4}\frac{f_H^2}{f_{pl}^2} = 1 \quad \text{or}$$

$\left(\frac{f_H}{f_{pl}}\right)^2 = 0.7$ and $f_H = 0.837\, f_{pl}$. Now we construct a table of values of $|A|$ in dB for different f using Eq. (14-53) and denoting $K_1 = 20\log|A_o|$.

f/f_{pl}	0.5	0.7	1	2	4
$\|A\|$ dB	K_1-1.23	K_1-2.23	K_1-4.	K_1-10.	K_1-19.31

Using this table we construct the true Bode magnitude plot which is shown below on the same graph the idealized Bode magnitude plot is shown, from which $f_H = 0.86\, f_{pl}$, in close agreement with the value obtained above.

(b) Phase

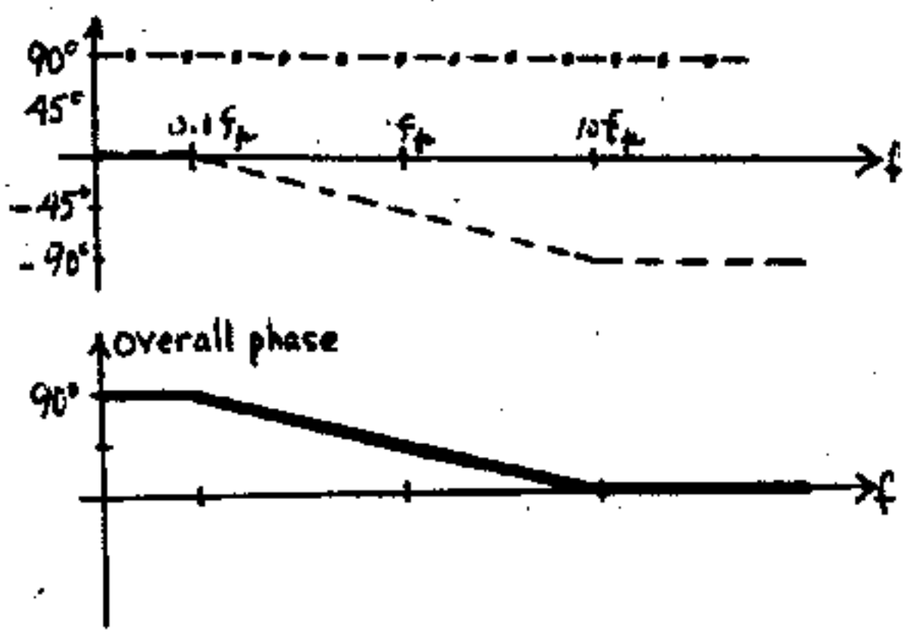

Indeed, for $f \gg f_p$ we obtain from (1)

$\frac{V_o}{V_i} \approx \frac{jf/f_p}{jf/f_p} = 1$ Thus gain = 20 log 1 = 0 dB and phase = 0°, as the curves show.

14-35 (a) f_p = 1 kHz f_z = 10 kHz. The

$$\frac{A}{A_o} = \frac{(1+jf/f_z)}{(1+jf/f_p)} = \frac{(1+jf/10)}{(1+jf/1)} \qquad (1)$$

Observe that the contribution of the zero to the magnitude curve is $20\log(1+jf^2/f_z^2)^{1/2}$, which is the negative of that contributed by a pole at f_z. Hence the idealized Bode plot for a zero is the same as that for a pole <u>only that</u> the asymptote has a slope of -(-20 dB/decade) = +20 dB decade. A similar argument shows that the idealized phase curve for a zero is the same as that for a pole, <u>only that</u> the slope is now +45°/decade and the final phase is +90°. Following the notation of Prob. 14-34:

(a) Magnitude

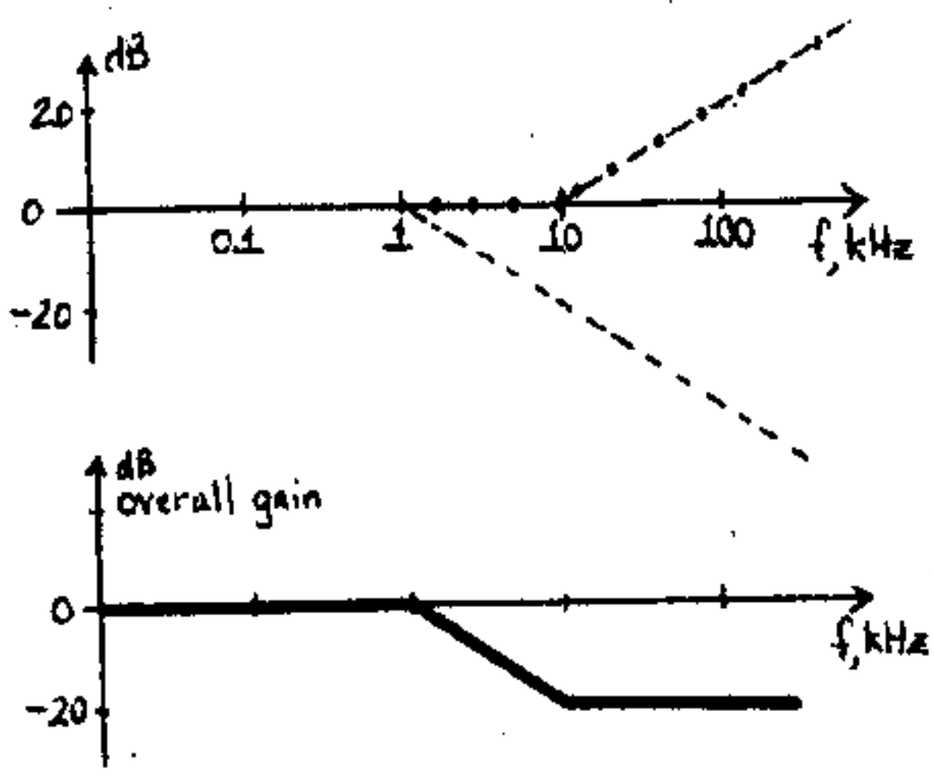

Indeed, observe that for high frequencies, from (1), $20 \log|A/A_o| = 20\log\left|\frac{f/10}{f/1}\right| = 20\log(1/10) = -20$ dB, as shown in the Figure.

Phase

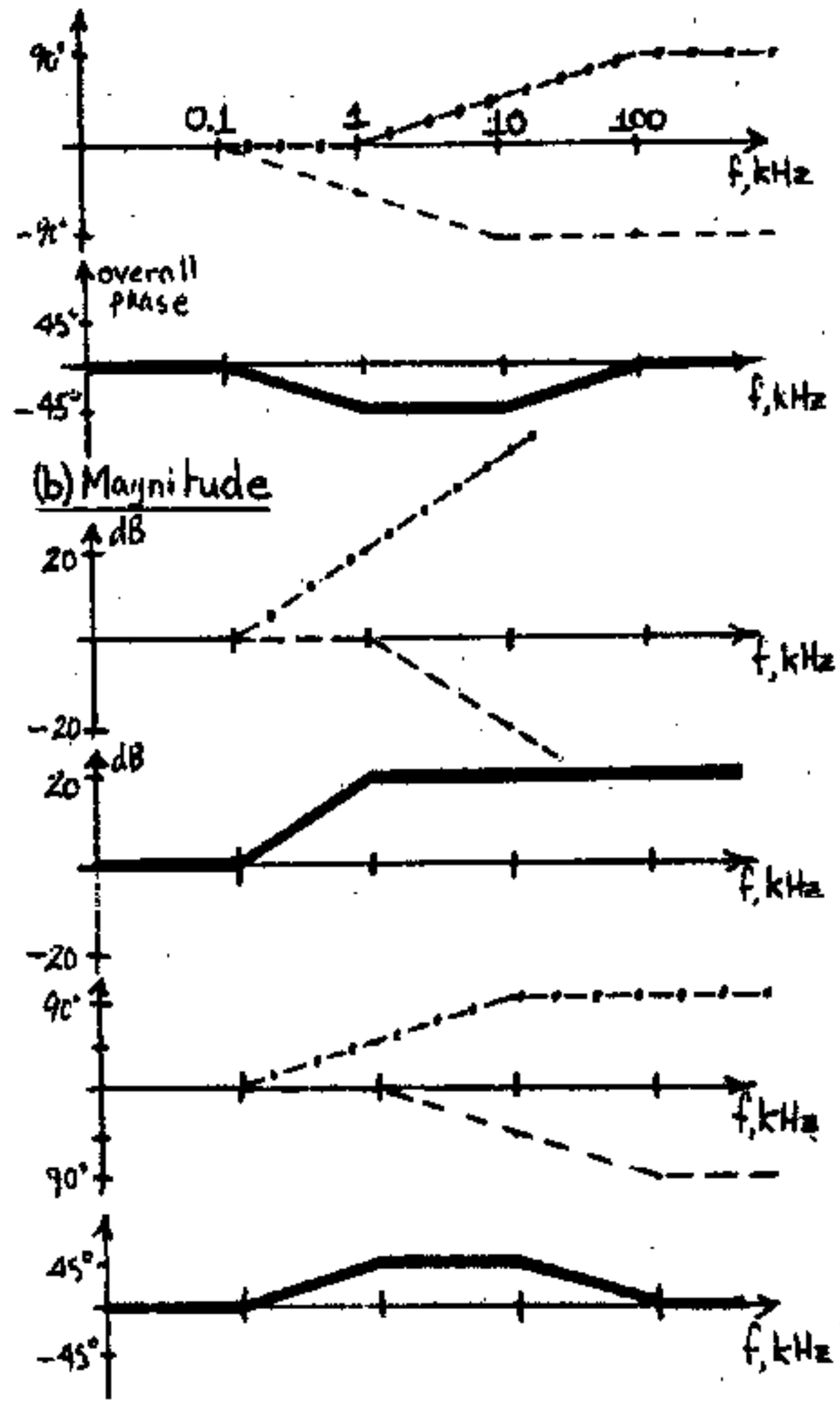

14-36 (a) $20 \log\frac{A}{A_o} = 20\log\frac{A\beta}{A_o\beta} = 20\log A\beta - 20\log A_o\beta$. (1)

(i) The phase margin is defined as the phase corresponding to $20\log A\beta = 0$ plus 180° (Fig. 14-17).

$20\log(A_o\beta) = 20\log(10\times0.5) = 20\times0.7 = 14$ dB

Thus $20 \log A/A_o = 0 - 14$ dB

The frequency f_o at which the loop gain is 0 dB (for the computation of the phase margin) is that frequency for which $|A/A_o| = -14$ dB in Fig. 14-19, or $f_o \approx f_{p2} = 10$. The phase at f_o is -120°, hence phase margin = 180-120 = <u>60°</u>.

(ii) The frequency f_g at which the phase is 180° is from Fig. 14-19 $f = 100$. The gain margin is $20\log A\beta$ at $f = 100$ from Fig. 14-17. Hence gain margin = $20\log A\beta = 20\log(\frac{A}{A_o}) + 20\log A_o\beta$

$= 20\log(\frac{A}{A_o}) + 14$

At $f = 100$ we find by extrapolation of Fig. 14-19 that $20\log\frac{A}{A_o} = -55$ dB.

$\therefore$ |Gain margin| = $|-55+14| = \underline{41\text{ dB}}$

(b) For a phase margin of 45°, the phase is -135° which from Fig. 14-19 occurs at $f \approx 14$ where $\log|\frac{A}{A_o}| \approx -20$ dB The phase margin is found at $20\log A\beta = 0$ (Fig. 14-17)

From (1) $20\log\frac{A}{A_o} = -20\log A_o\beta$ or

$-20 = -20\log 10\beta$ Hence $\beta \approx \underline{1}$.

14-37 (a) The loop gain of this amplifier is $\beta A = \frac{-\beta \times 10^3}{(1+jf)^3}$ with f in MHz. The system becomes unstable at the point where $\arg(\beta A) = -180°$ and $|\beta A| = 1$.

At that point, noting that $\beta < 0$ (negative feedback), $\arg(\beta A) = -3\arctan(f) = -180$ or $f = \tan 60° = \sqrt{3}$

At that frequency we want $|\beta A| = 1$ or

$$|\beta| = \left|\frac{1}{A}\right| = \left|\frac{(1+j\sqrt{3})^3}{10^3}\right| = \left|\frac{1+j\sqrt{3}}{10}\right|^3 = 0.008$$

(b) Since $\beta A_o = -0.008\times -10^3 = 8$, the loop gain now becomes

$$\beta A = \frac{8}{(1+jf)^2(1+jf/0.2)} = \frac{8}{(1-f^2+2jf)(1+j5f)} \qquad (1)$$

The gain margin is $|\beta A|$ at $f = f_1$ where f_1 is such that $\arg(\beta A) = -180°$ or, $\mathrm{Im}(\beta A) = 0$ <u>and</u> $\mathrm{Re}(\beta A) < 0$. From (1)

$$\beta A = \frac{8}{(1-11f^2)+j(7f-10f^3)} = \frac{8(1-11f^2)-j(7f-10f^3)}{((1-11f^2)^2+(7f-10f^3)^2)^{1/2}} \qquad (2)$$

$\mathrm{Im}(\beta A) = 0$ when $7f - 10f^3 = 0$ or $f_1 = \pm\sqrt{7/10} = \pm 0.837$

Note that $\mathrm{Re}(\beta A) < 0$ at f_1. Thus the gain margin is, from (2)

$$|\beta A| = \left|\frac{8}{(1-11\times 7/10}\right| = 1.194$$

In decibels, gain margin = $20\log(1.194) = \underline{1.54\text{ dB}}$

14-38 (a) $A_V = \frac{-10^4}{(1+jf/f_1)(1+jf/f_2)(1+jf/f_3)}$

where $f_1 = 1.$ MHz, $f_2 = 5.$ MHz, $f_3 = 30.$ MHz and f is in MHz.

Notice $20\log(10^4) = 80$ dB

(b)

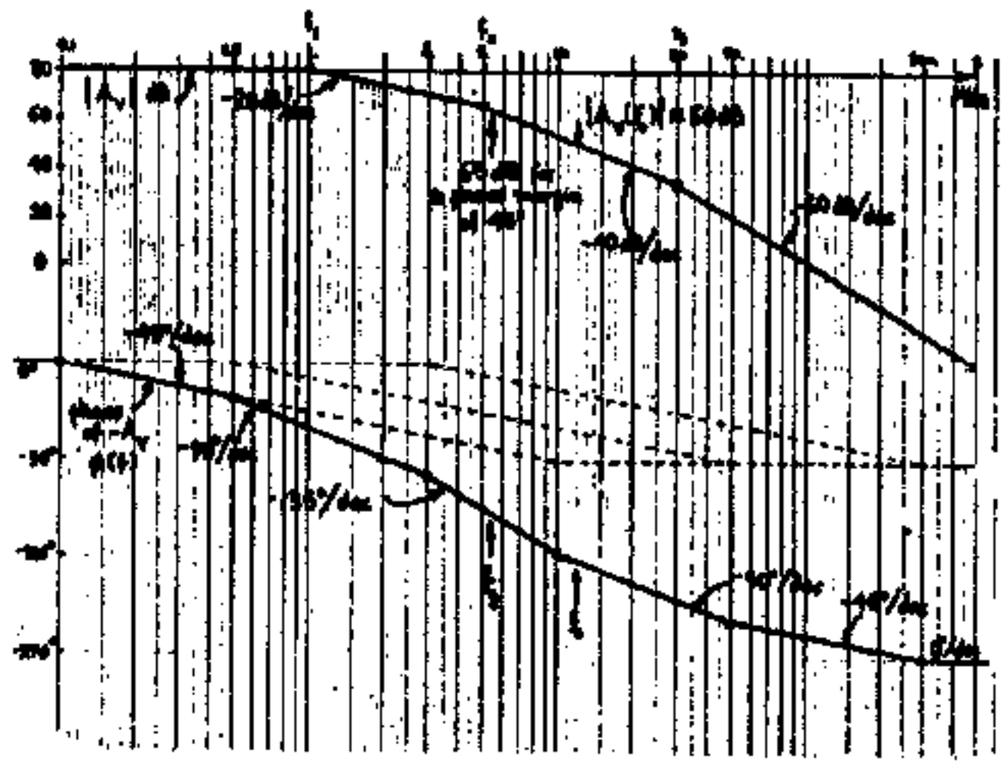

(c) The break points in the phase plot occurs at $0.1\,f_k$ and $10\,f_k$ for $k = 1, 2, 3$ or at 0.1, 0.5, 3, 10, 50, and 300 MHz.

(d) The amplifier will oscillate at a frequency f_o where $\phi(f_o) = -180°$ if $|\beta A_V(f_o)| = 1$ or $|A_V(f)| = 0$ dB. From the phase plot, we find $\underline{f_o = 12\text{ MHz}}$ = oscillation frequency, at which $A_V = 50$ dB. From Eq. (14-57)

$20\log|A_{V_o}\beta| = 20\log|A_{V_o}| - 20\log|A_V| = 80-50 = \underline{30\text{ dB}}$.

To prevent oscillation the midband loop gain must be less than 30 dB because in that case the loop gain at 12 MHz will be certainly less than 0 dB. For example, if $|A_{V_o}\beta| = 29$ dB, then (in dB) $(A_{V_o})_{dB} + (\beta)_{dB} = 29$ and $(\beta)_{dB} = 29-80 = -51$ dB and $(\beta A_V(f_o))_{dB} = (\beta)_{dB} + A_V(f_o)_{dB} = -51+50 = -1$ dB which is indeed less than 0 dB.

(e) For a phase margin of 45° we need a phase of -135° at the point where the loop gain βA_V is unity (0 dB). The phase is -135° at $f = 5.4$ MHz, at which $|A_V| = 65$ dB. Thus

$|A_{V_o}\beta| = 80-65 = \underline{15\text{ dB}}$ = maximum midband loop gain which can be added without causing oscillations. Since the amount of feedback is defined as $20\log(1+\beta A_{V_o}) \approx 20\log(\beta A_{V_o})$ for $\beta A_{V_o} \gg 1$, then the amount of feedback equals the midband loop gain in dB or 15 dB. If more than 15 dB is introduced, then the gain curve will move upward and the 0 dB point will move to the right (see Figure) this will cause the phase to fall below -135° (see Figure), closer to -180°, thus reducing the phase margin to less than 45°.

14-39 (a) $A_V = \frac{-10^4}{(1+jf)(1+jf/3)(1+jf/20)}$

where f is in MHz. Note that $20\log|A_{V_o}| = 20\log 10^4 = 80$.

(b) See graph below

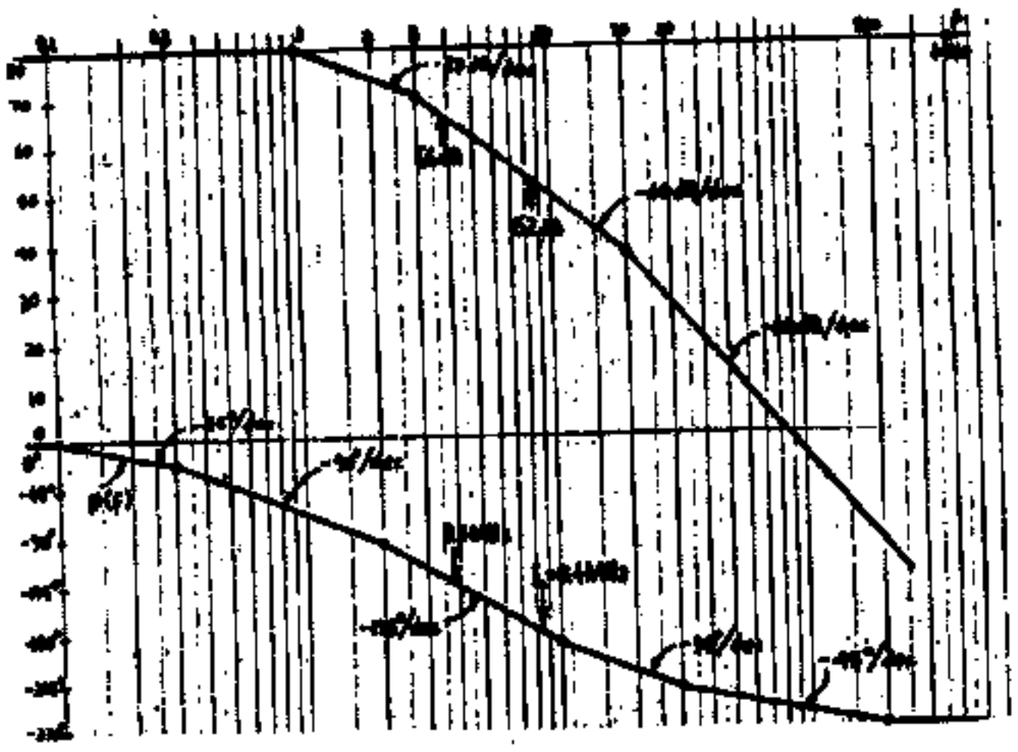

(c) The corner frequencies are at

0.1, 0.3, 2, 10, 30, and 200 MHz

(d) $f_o = 8.4$ MHz for the phase to be -180° and $|A_V(f_o)| = 52$ dB. Thus, from Eq. (14-57)

$20\log|A_{V_o}\beta| = 20\log|A_{V_o}| - 20\log|A_V| = 80-52 = 28$ dB

This is the <u>maximum</u> midband loop-gain that can be applied without oscillations. (See explanation on Prob. 14-38)

(e) From the phase plot, $\theta = -135^\circ$ (phase margin = 45°) at $f_g = 3.8$ MHz and $|A_V(f_g)| \approx 66$ dB. Hence $|A_{V_o}\beta| = 80-66 = 14$ dB = maximum midband gain.

CHAPTER 15

15-1 (a) Converting the A_vV_i and R_o combination of Fig. 15-3 to the Norton equivalent we have

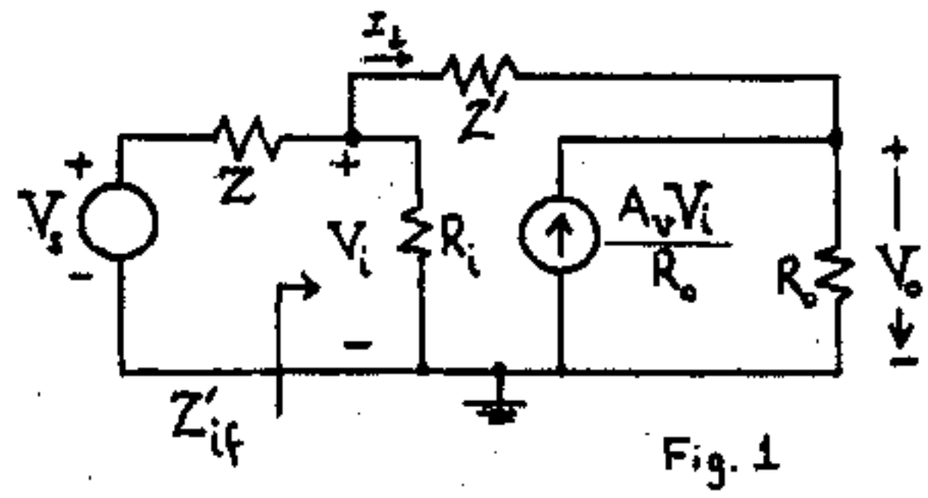

Fig. 1

The output node KCL equation is

$$\frac{A_vV_i}{R_o} + \frac{V_i - V_o}{Z'} - \frac{V_o}{R_o} = 0 \quad \text{from which}$$

$$A_vV_i + Y'(V_i - V_o)R_o - V_o = 0, \quad (A_v + R_oY')V_i = (1 + R_oY')V_o$$

$$\text{and } A_V = \frac{V_o}{V_i} = \frac{A_v + R_oY'}{1 + R_oY'} \quad \text{which is Eq. (15-3)}$$

(b) Converting the V_s and Z combination of Fig. 15-3 to the Norton equivalent and writing the KCL equation at the input node, we have

$$YV_s - (Y + Y_i)V_i + Y'(V_o - V_i) = 0$$

Since we are interested in $A_{Vf} = V_o/V_s$, we eliminate V_i in the above equation by letting $V_i = V_o/A_V$. This results in

$$YV_s - \frac{Y + Y_i + Y'}{A_V}V_o + Y'V_o = 0 \quad \text{or}$$

$$A_{Vf} = \frac{V_o}{V_s} = \frac{Y}{\dfrac{Y + Y_i + Y'}{A_V} - Y'} \quad \text{which is Eq. (15-3)}$$

(c) Notice, from Fig. 15-3 that

$$I_i = \frac{V_i - A_vV_i}{Z' + R_o}, \quad \text{hence } Z'_{if} = \frac{V_i}{I_i} = \frac{Z' + R_o}{1 - A_v}$$

(d) The circuit from which the short-circuit output current I_{sc} is shown below (where R_i was neglected in Fig. 1)

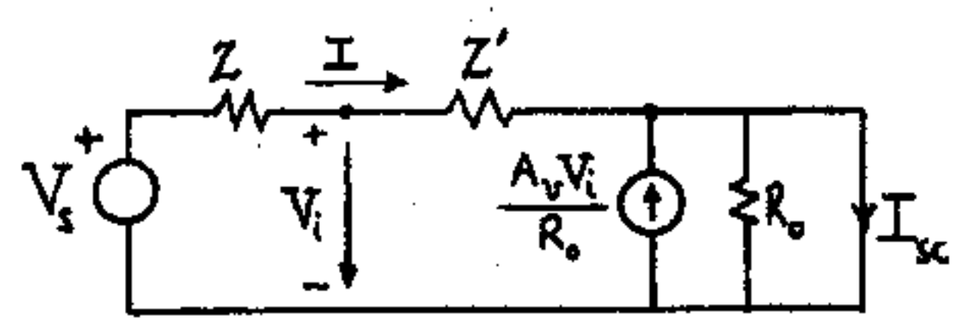

$$I_{sc} = I + \frac{A_vV_i}{R_o} = \frac{V_i}{Z'} + \frac{A_vV_i}{R_o} = \left(Y' + \frac{A_v}{R_o}\right)V_i =$$

$$(Y' + A_v/R_o)\left(\frac{Z'}{Z + Z'}V_s\right) = \frac{1}{Z + Z'}\left(1 + \frac{Z'A_v}{R_o}\right)V_s$$

The open circuit voltage is $V_{oc} = A_{Vf}V_s = -(Z'/Z)V_s$

Hence $Z_{of} = \frac{V_{oc}}{I_{sc}} = \frac{-(Z'/Z)(Z+Z')}{1+Z'A_v/R_o} = R_o\left(\frac{1+Z'/Z}{R_oY'+A_v}\right)$

15-2 The circuit that results if we replace Z' in Fig. 15-3 by its two Miller impedances is show below, where $A_V = V_o/V_i$

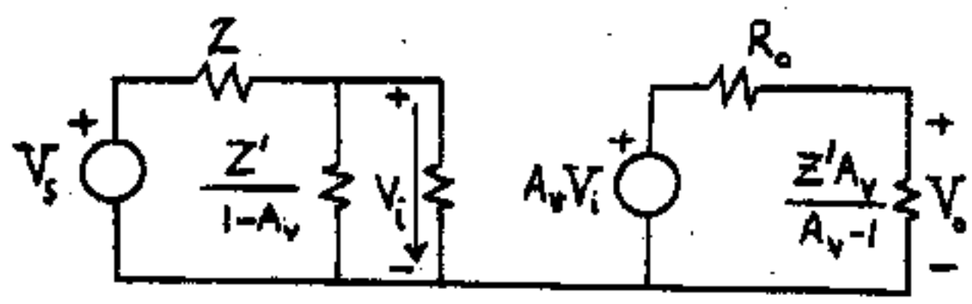

From the output circuit

$$V_o = A_V V_i \frac{\frac{Z'A_V}{A_V-1}}{R_o + \frac{Z'A_V}{\quad}} = \frac{A_vV_i}{1+R_oY'(\frac{A_V-1}{\quad})}$$

$$A_{Vf} = \frac{V_o}{V_s} = \frac{V_o}{ZI_s} = YR_{Mf} = \frac{-Y}{Y' - \frac{1}{A_v}(R_oY'+1)(Y+Y'+Y_i)}$$

If $R_oY' \ll 1$, then the above expression reduces to Eq. (15-2).

15-4 We clearly have a voltage-shunt feedback amplifier. By following rules similar to those in Prob. 15-3 we obtain the following circuit:

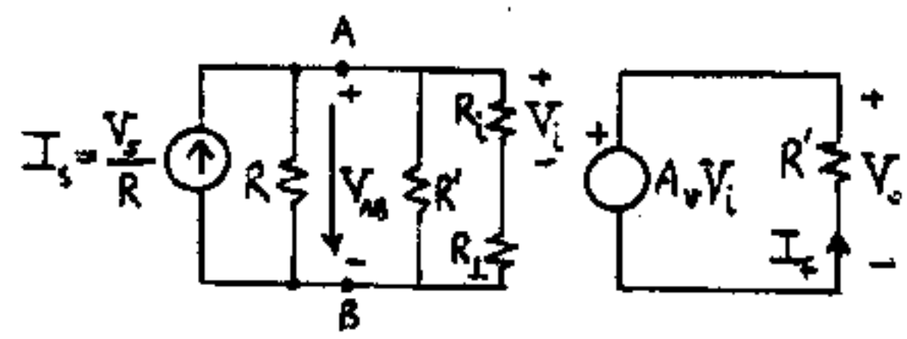

Here the transconductance R_M is stabilized.

The KCL equation at the input node is

$$\frac{V_i+V_s}{Z}+\frac{V_i}{R_i}+\frac{V_i+V_s-V_o}{Z'}=0 \text{ or}$$

$$(Y+Y_i+Y')V_i-Y'V_o=-(Y+Y')V_s \qquad (1)$$

Similarly, for the output node

$$\frac{V_i+V_s-V_o}{Z'}+\frac{A_vV_i-V_o}{R_o}=0 \quad \text{or}$$

$$(Y'+A_vY_o)V_i-(Y'+Y_o)V_o=-Y'V_s \qquad (2)$$

Solving (1) and (2) for V_o/V_s we find, using Crammer's rule

$$A_{Vf}=\frac{V_o}{V_s}=\frac{-(Y+Y_i+Y')Y'+(Y'+A_vY_o)(Y+Y')}{-(Y+Y_i+Y')(Y'+Y_o)+(Y'+A_vY_o)Y'}=$$

$$\frac{A_vY_o(Y+Y')-Y'Y_i}{(A_v-1)Y_oY'-(Y+Y_i)(Y'+Y_o)}$$

Note: as $A_v\to\infty, A_{Vf}\to\frac{A_vY_o(Y+Y')}{A_vY_oY'}=\frac{Y+Y'}{Y'}=1+\frac{Y}{Y'}=1+\frac{Z'}{Z}$

as it should.

15-6

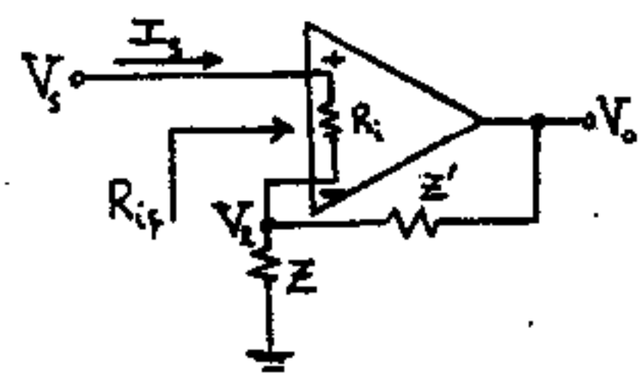

Since $R_{if}=R_s/I_s$, we try to express V_s in terms of I_s. From the figure, $V_s=R_iI_s+V_2=R_iI_s+\frac{Z}{Z+Z'}V_o$ (where we used the fact that R_i is large, hence $V_2=\frac{Z}{Z+Z'}V_o$) Thus $V_s=R_iI_s+\frac{Z}{Z+Z'}A_V(V_s-V_2)$ (1)

If we express V_2 in terms of V_s and I_s, then we will be able to form V_s/I_s and find R_{if}. We have $V_2=\frac{Z}{Z+Z'}A_V(V_s-V_2)$ and solving for V_2,

$$V_2=\frac{ZA_V}{Z+Z'+A_VZ}V_s$$

Substitute this in (1): $V_s=R_iI_s$

$$+\frac{Z}{Z+Z'}A_V\left(V_s-\frac{ZA_V}{Z+Z'+A_VZ}V_s\right)$$

From the above equation we form

$$R_{if}=\frac{V_s}{I_s}=R_i\frac{Z+Z'+A_VZ}{Z+Z'}=R_i\left(1+\frac{A_VZ}{Z+Z'}\right) \qquad \text{Q.E.D.}$$

15-7 (a) Since voltage-series feedback is involved, A_V is stabilized. The amplifier without feedback is obtained from Sec. 12-7 and the following circuit is obtained

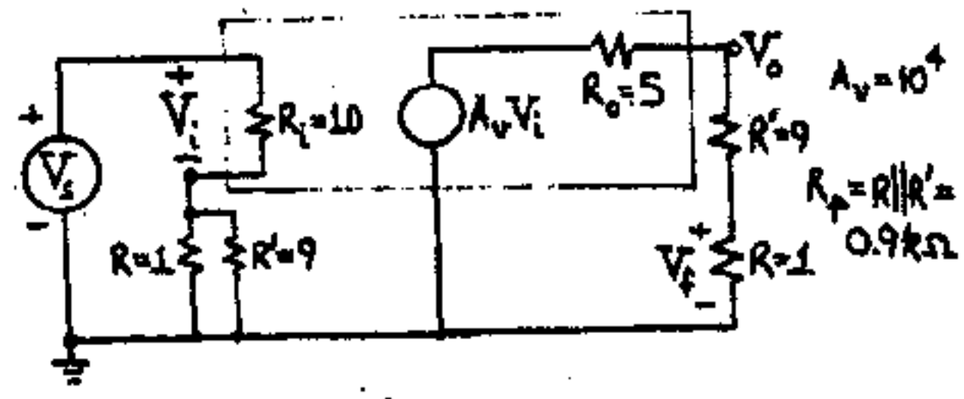

$$\beta=V_f/V_o=\frac{R}{R+R'}=\frac{1}{10}$$

$$V_o=A_vV_i\frac{R'+R}{R'+R+R_o}=10^4\ \frac{10}{15}V_i=6{,}667\,V_i$$

$$V_i=V_s\frac{R_i}{R_i+R_p}=V_s\frac{10}{10.9}=0.9174\,V_s \quad \text{where } R_p=\frac{1\times9}{1+9}=0.9$$

$$\therefore\ A_V=\frac{V_o}{V_s}=\frac{V_o}{V_i}\ \frac{V_i}{V_s}=(6{,}667)(0.9174)=6116$$

$$A_{Vf}=\frac{A_V}{1+\beta A_V}=\frac{6116}{1+611.6}=\underline{9.984}$$

This should be compared with the approximate value $A_{Vf}\approx\frac{1}{\beta}=10$

(b) From Table 12-4 $R_{if}=R_i(1+\beta A_V)=(10)(612.6)=6{,}126\ k\Omega=\underline{6.126\ M\Omega}$

If we use the result of Prob. 15-6 here

$$R_{if}=R_i\left(1+\frac{A_VR}{R+R'}\right)=10\left(1+\frac{6116}{10}\right)=6{,}126\ k\Omega,$$

as above. Notice that $\frac{A_VR}{R+R'}=\beta A_V$ in the above formula.

(c) $R_{of}=\frac{R_o}{1+\beta A_v}=\frac{5000}{1+1000}=\underline{4.995\ \Omega}$

15-8 (a) We have a voltage-series feedback amplifier. To obtain the input circuit without feedback set $V_o=0$; this places R' in parallel with R. For the output circuit set $I_i=0$; this places R' in series with R from V_o to ground.

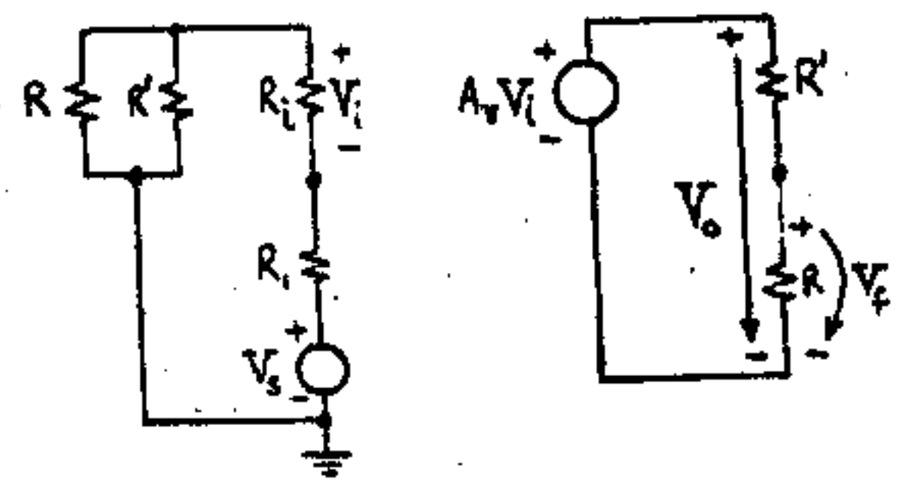

Assumption 1: Deactivate feedback by setting $A_V=0$. Since $R_o=0$ then $V_o=0$.

Assumption 2: By hypothesis

Assumption 3: From the figure of the basic amplifier $\beta=V_f/V_o=R/(R+R')$ independent of the load

(b) For the basic amplifier: $V_o = A_v V_i$

$$V_i = -V_s \frac{R_1}{R_1+R_i+R\|R'} = \frac{-V_s R_1(R+R')}{(R+R')(R_1+R_i)+RR'}$$

$$A_V = \frac{V_o}{V_s} = \frac{-A_v R_1(R+R')}{(R+R')(R_1+R_i)+RR'}$$

(c) With feedback: $A_{Vf} = \dfrac{A_V}{1+\beta A_V} =$

$$= \frac{\dfrac{-A_v R_1(R+R')}{(R+R')(R_1+R_i)+RR'}}{1-\dfrac{R}{R+R'}\dfrac{A_v R_1(R+R')}{(R+R')(R_1+R_i)RR'}}$$

$$A_{Vf} = \frac{-A_v R_1(R+R')}{RR'+(R+R')(R_1+R_i)-A_v RR_i}$$

15-9 Connect a source V at the output, short-circuit V_s and assume $R_i = \infty$. $Y_{of} = \dfrac{I}{V}$

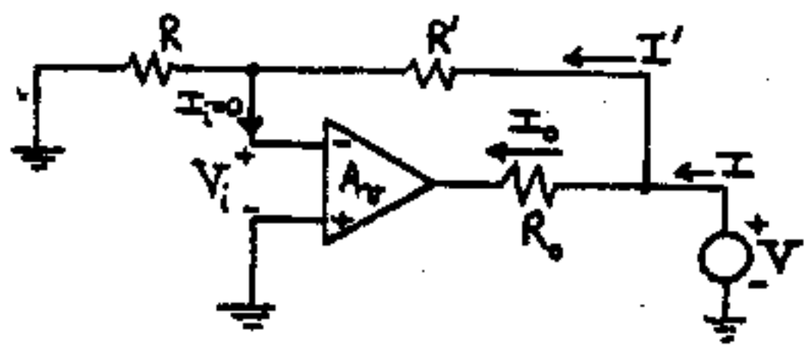

From the figure:

$I = I_o + I'$ (1); $V = (R+R')I'$ (2); $V = R_o I_o + A_v V_i$ (3); $V_i = RI'$ (4).

From (2): $I' = \dfrac{V}{R+R'}$ and from (3) and (4):

$V = R_o I_o + A_v V_i = R_o I_o + A_v RI' = R_o I_o + A_v R\dfrac{V}{R+R'}$

Thus: $V[1-A_v\dfrac{R}{R+R'}] = R_o I_o$ and $I_o = \dfrac{V}{R_o}[1-A_v\dfrac{R}{R+R'}]$

Substituting I_o and I' into (1): $I = \dfrac{V}{R_o}[1-A_v\dfrac{R}{R+R'}] + \dfrac{V}{R+R'}$

$$Y_{of} = \frac{I}{V} = \frac{1}{R_o}[1-A_v\frac{R}{R+R'}] + \frac{1}{R+R'}$$

15-10 (a) Following the discussion of Sec. 15-3, we see that a large value of R_e is desired for a high CMRR. Thus the assumption $R_e \gg R_c$ is reasonable; since the typical values of h_{fe} and h_{re} are 100 and 10^{-4}, respectively, it is certain that $h_{fe} \gg h_{re}$. Note that, typically, $h_{fe}\, h_{re} = 10^{-2}$ and $1/h_{oe} = 100$ kΩ, so the assumption $R_e \gg h_{fe} h_{re}/h_{oe} = 1$ kΩ is also justified.

We next proceed to prove the formula for A_c using the four h-parameter model in Fig. 15-7b which produces the following circuit

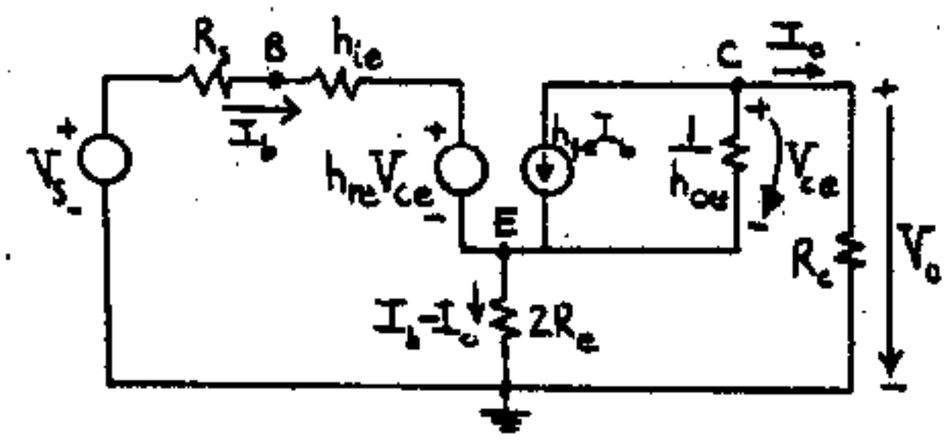

We are interested in $A_c = V_o/V_s$. From KVL

$V_s = (R_s+h_{ie})I_b + h_{re}V_{ce} - V_{ce} + R_c I_o =$

$(R_s+h_{ie})I_b - (1-h_{re})(R_c I_o - 2R_e(I_b - I_o)) + R_c I_o =$

$[R_s+h_{ie}+2(1-h_{re})R_e]I_b - [2(1-h_{re})R_e + h_{re}R_c]I_o$ (1)

$V_s = (R_s+h_{ie}+2R_e)I_b - 2R_e I_o$ (2) where we used $h_{re} \ll 1$ in (1).

From KCL at the output node, $-I_o = h_{fe}I_b + h_{oe}V_{ce} = h_{fe}I_b + h_{oe}(R_c I_o - 2R_e(I_b - I_o))$. Solving for I_b we obtain

$$I_b = \frac{1+h_{oe}(R_c+2R_e)}{-h_{fe}+h_{oe}2R_e} I_o = \frac{1+2h_{oe}R_e}{-h_{fe}+2h_{oe}R_e} I_o, \text{ since } R_e \gg R_c$$

Substituting this expression for I_b in (2)

$$V_s = \left[\frac{(R_s+h_{ie}+2R_e)(1+2h_{oe}R_e)}{-h_{fe}+2h_{oe}R_e} - 2R_e\right] I_o =$$

$$\frac{(R_s+h_{ie})(1+2h_{oe}R_e)+2R_e+2h_{fe}R_e}{(2h_{oe}R_e-h_{fe})} I_o \quad (3)$$

Finally $A_c = \dfrac{V_o}{V_s} = \dfrac{R_c I_o}{V_s}$ produces the equation to be proved.

(b) Consider the Figure of part (a) above with $R_c = 0$; then the above formulas are valid and the ratio I_{sc}/V_s is given by Eq. (3) above with $I_{sc} = I_o$. We next find V_{oc}/V_s from the Figure below, where $R_c = \infty$

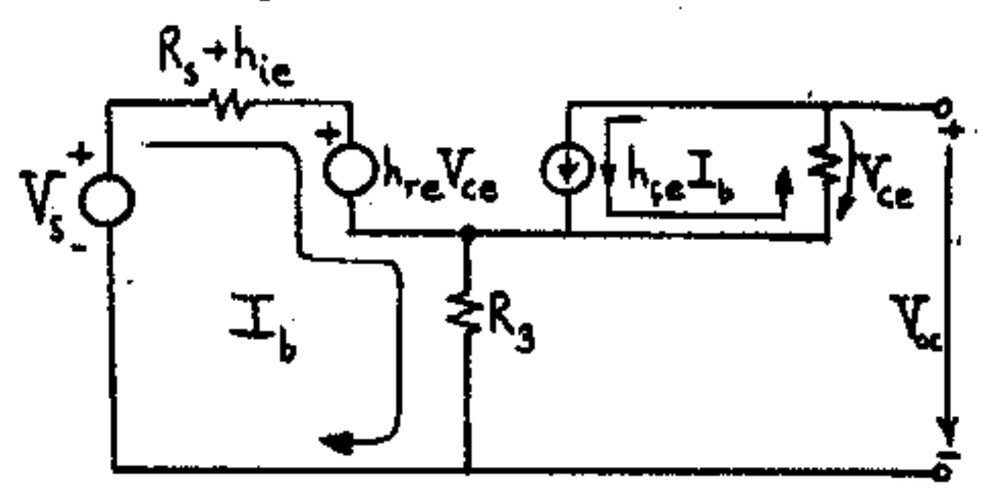

Noticing that $V_{ce} = -(h_{fe}I_b)/h_{oe}$,

$$V_{oc} = V_{ce} + R_3 I_b = -\frac{h_{fe}}{h_{oe}} I_b + R_3 I_b = (R_3 - h_{fe}/h_{oe})I_b \quad (4)$$

KVL around the input loop: $V_s = (R_s+h_{ie}+R_3)I_b + h_{re}V_{ce} = (R_s+h_{ie}+R_3-h_{re}h_{fe}/h_{oe})I_b$ (5)

Dividing the members of Eqs. (4) and (5)

$$\frac{V_{oc}}{V_s} = \frac{R_3 - h_{fe}/h_{oe}}{R_s + h_{ie} + R_3 - h_{re}h_{fe}/h_{oe}}$$

Finally, using the ratio I_{sc}/V_s from Eq. (3), we have

$$R_o = \frac{V_{oc}}{I_{sc}} = \frac{(R_3 - h_{fe}/h_{oe})[(R_s + h_{ie})(1 + h_{oe}R_3) + (1 + h_{fe}R_3)]}{(R_s + h_{ie} + R_3 - h_{re}h_{fe}/h_{oe})(h_{oe}R_3 - h_{fe})}$$

$$= \frac{(1 + h_{fe}R_3) + (R_s + h_{ie})(1 + h_{oe}R_3)}{h_{oe}(R_s + h_{ie} + R_3 - h_{re}h_{fe}/h_{oe})} \qquad \text{Q.E.D.}$$

(c) $R_o = \dfrac{(1+100\times 1)+(1+2.1)(1+10^{-2}\times 1)}{10^{-2}(1+2.1+1-10^{-4}\times 100\times 100)} = 3.36\times 10^3\ \text{k}\Omega =$ $\underline{3.36\ \text{M}\Omega}$

15-11 (a) Using superposition and Eqs. (15-1) and (15-4) we have (notice that V_s of Fig. 15-4a for the non-inverting terminal is $R_1v_2/(R_1+R_2)$ in this case)

$$v_o = -\frac{R'}{R}v_1 + \frac{R+R'}{R}\frac{R_1}{R_1+R_2}v_2 \qquad (1)$$

(b) If we let $v_1 = v_c + \frac{1}{2}v_d$ and $v_2 = v_c - \frac{1}{2}v_d$ in (1)

$$v_o = -\frac{R'}{R}(v_c + \frac{1}{2}v_d) + \frac{R_1}{R}\frac{R+R'}{R_1+R_2}(v_c - \frac{1}{2}v_d) =$$

$$(\frac{R_1}{R}\frac{R+R'}{R_1+R_2} - \frac{R'}{R})v_c + \frac{1}{2}(-\frac{R'}{R} - \frac{R_1}{R}\frac{R+R'}{R_1+R_2})v_d \qquad (2)$$

Now, if $R'/R = R_1/R_2$, $(R'/R)+1 = (R_1/R_2)+1$ or $\frac{R'+R}{R} = \frac{R_1+R_2}{R_2}$. Thus $\frac{R_1}{R}\frac{R+R'}{R_1+R_2} = \frac{R_1}{R}\frac{R}{R_2} = \frac{R_1}{R_2} = \frac{R'}{R}$

and the coefficient of v_c is zero; in this case we get from (2)

$$v_o = \frac{1}{2}(-\frac{R'}{R} - \frac{R_1}{R}\frac{R}{R_2})v_d = \frac{1}{2}(-\frac{R_1}{R_2} - \frac{R_1}{R_2}) = -\frac{R_1}{R_2}v_d$$

(c) From (2)

$$\text{CMRR} = \frac{A_d}{A_c} = \frac{1}{2}\frac{\frac{R'}{R} + \frac{R_1}{R}\frac{R+R'}{R_1+R_2}}{\frac{R'}{R} - \frac{R_1}{R}\frac{R+R'}{R_1+R_2}} =$$

$$= \frac{1}{2}\frac{R'(R_1+R_2) + R_1(R+R')}{R'(R_1+R_2) - R_1(R+R')}$$

15-12 (a) We verify Eq. (15-13) by referring to Fig. 15-2a, for which (assuming the simplified transistor model)

$$A_d = V_o/V_s = \frac{-R_cI_c}{I_b}\frac{I_b}{V_s} = -h_{fe}R_c\frac{I_b}{V_s}$$

Now, in the input circuit I_b flows through R_s in series with h_{ie}, hence $\frac{1}{2}V_s = -(R_s + h_{ie})I_b$. Hence

$$A_d = \frac{-h_{fe}R_c(\frac{1}{2})}{-(R_s + h_{ie})} = \frac{1}{2}\frac{h_{fe}R_c}{R_s + h_{ie}} \qquad \text{Q.E.D.} \qquad (1)$$

Eq. (15-14) is verified from Fig. 15-7b which is a CE stage with an emitter resistance whose value is $R = 2R_e$. The voltage gain $A_V = V_o/V_{bn}$ where V_{bn} is the voltage from base to ground is given by Eq. (11-46) with R_L and R_e replaced by R_c and $R = 2R_e$, respectively. Thus

$$A_c = \frac{V_o}{V_s} = \frac{V_o}{V_{bn}}\frac{V_{bn}}{V_s} = \frac{-h_{fe}R_c}{h_{ie} + (1+h_{fe})2R_e}\frac{R_1}{R_1 + R_s}$$

where $R_1 = h_{ie} + (1+h_{fe})2R_e$ (Eq. 11-45). Thus

$$A_c = \frac{-h_{fe}R_c}{R_s + h_{ie} + (1+h_{fe})2R_e} \qquad \text{Q.E.D.}$$

(b) From (1), with $R_s \ll h_{ie}$ and $h_{fe} = g_m r_{b'e}$, we have

$$A_d = \frac{1}{2}\frac{g_m r_{b'e}R_c}{h_{ie}} = \frac{1}{2}\frac{g_m r_{b'e}R_c}{r_{bb'} + r_{b'e}}$$

Since $r_{b'e} \gg r_{bb'}$ $A_d = \frac{1}{2}\frac{g_m r_{b'e}R_c}{r_{b'e}} = \frac{1}{2}g_mR_c$

Now from Eq. (11-25) $g_m = \frac{I_C}{V_T}$ and

$$A_d = \frac{1}{2}\frac{I_CR_c}{V_T} = \frac{I_oR_c}{4V_T}$$

Since $A_d = \frac{dV_{C1}}{d(V_{B1} - V_{B2})} = R_cg_{md}$, $g_{md} = \frac{I_o}{4V_T}$ Q.E.D.

15-13 (a) Under the conditions stated, we have from Eq. (15-13) $A_d = h_{fe}R_c/2h_{ie}$, and from Eq. (15-14)

$$A_c = \frac{-h_{fe}R_c}{h_{ie} + h_{fe}2R_e} = \frac{-h_{fe}R_c}{h_{fe}2R_e} = -\frac{R_c}{2R_e}$$

Thus $\rho = |A_d/A_c| = h_{fe}R_e/h_{ie}$ Q.E.D.

(b) $\rho = \dfrac{g_m r_{b'e}R_e}{r_{bb'} + r_{b'e}} \approx \dfrac{g_m r_{b'e}R_e}{r_{b'e}} = g_mR_e$

where we used $h_{fe} = g_m r_{b'e}$ and $h_{ie} = r_{bb'} + r_{b'e}$

Since $g_m = \frac{I_{C2}}{V_T}$, we have $\rho = \frac{I_{C2}R_e}{V_T} = \frac{2I_{C2}R_e}{2V_T} =$ $V/2V_T$, where we neglected the base current in assuming that the quiescent voltage across R_e is $2I_{C2}R_e$.

15-14 Replacing the transistor in Fig. 15-7b by its four h-parameter model we obtain the Fig. below:

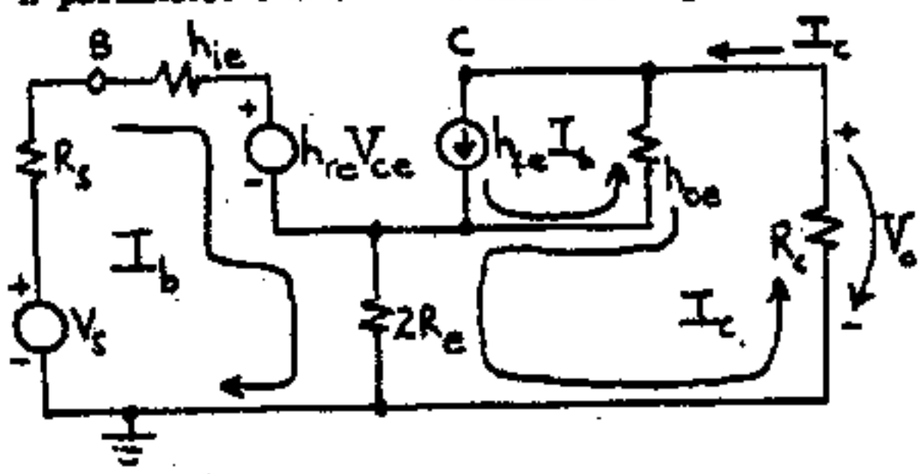

Since $A_c = V_o/V_s$, we have that $A_c = 0$ if $I_C = 0$.

Then from KVL in the output loop $\frac{h_{fe} I_b}{h_{oe}} + 0 - I_b 2R_e = 0$ or $\frac{h_{fe}}{h_{oe}} = 2R_e$

15-15 (a) From Eqs. (15-19) to (15-21) we have

$$-I_0 = I_{E1} + I_S \epsilon^{V_{BE2}/V_T} = I_{E1} + I_S \epsilon^{V_{BE1}/V_T} \epsilon^{-(V_{B1}-V_{B2})/V_T}$$

$$= I_{E1}(1+\epsilon^{-(V_{B1}-V_{B2})/V_T}) \quad \text{or} \quad I_{C1} = -I_{E1} = \frac{I_0}{1+\exp[-(V_{B1}-V_{B2})/V_T]}$$

(b) From Eq. (15-22) we obtain

$$g_{md} = \frac{dI_{C1}}{d(V_{B1}-V_{B2})} = \frac{I_0}{V_T} \frac{\epsilon^{-(V_{B1}-V_{B2})/V_T}}{\{1+\exp[-(V_{B1}-V_{B2})/V_T]\}^2}$$

If $V_{B1} = V_{B2}$ then $g_{md} = \frac{I_0}{4V_T}$

15-16 (a) From Eq. (15-22) $\frac{I_{C1}}{I_0} = \frac{1}{1+\epsilon^{-V/V_T}}$ where $V = V_{B1} - V_{B2}$ For $I_{C1} = 0.1\, I_0$ we have $1+\epsilon^{-V/V_T} = 10$ or $V = -V_T \ln 9$. For $I_{C1} = 0.9\, I_0$ we have $1+\exp(-V/V_T) = 10/9$ or $V = +V_T \ln 9$
Thus $\Delta V = 2V_T \ln 9 = 4.4\, V_T$

(b) For $I_{C1} = I_0/2$ we have $V = 0$

For $I_{C1} = 0.99\, I_0$ we find $1+\epsilon^{-V/V_T} = \frac{100}{99}$

or $V = V_T \ln 99 = 4.60\, V_T$

(c) From Fig. 15-9 we find $\Delta V = \pm 2.2\, V_T$ for case (a) and for $V/V_T = 4.60$ we read $I_{C1} \approx I_0$

15-17

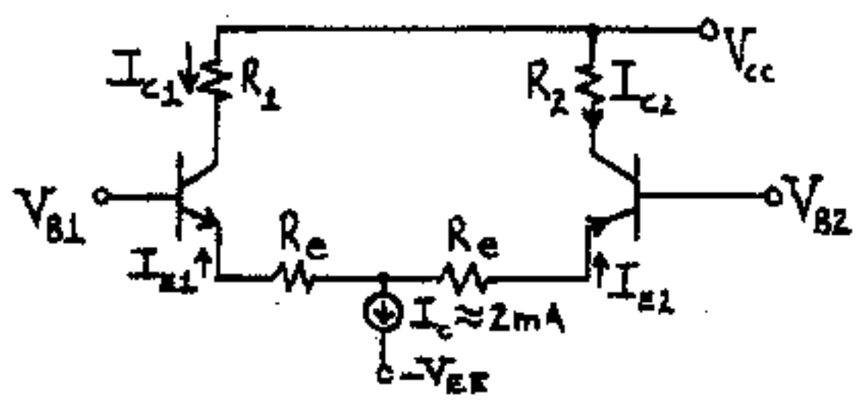

(a) Neglect base currents; then $I_{E1} = -I_{C1}$ and $I_{E2} = -I_{C2}$ KVL: $V_{B1} = V_{BE1} + R_e I_{C1} - R_e I_{C2} - V_{BE2} + V_{B2}$

Since $I_{C1} + I_{C2} = I_0$, $I_{C2} = I_0 - I_{C1}$ and substituting this in the KVL equation yields

$$V_{B1} - V_{B2} = (V_{BE1} - V_{BE2}) + R_e(2I_{C1} - I_0) \qquad (1)$$

(b) Here, to plot I_{C1}/I_o vs. $(V_{B1}-V_{B2})/V_T$ we will use what we know already, i.e. the graph of Fig. 15-9 which gives I_{C1}/I_o vs. $(V_{BE1}-V_{BE2})/V_T$. In order to do that, we try to express $(V_{B1}-V_{B2})$ in terms of $(V_{BE1}-V_{BE2})$: From Eq. (1)

$$\frac{V_{B1}-V_{B2}}{V_T} = \frac{V_{BE1}-V_{BE2}}{V_T} + \frac{R_e I_o}{V_T}\left(\frac{2I_{C1}}{I_0} - 1\right) \qquad (2)$$

We are given that $R_e = 50\ \Omega$, $I_0 = 2$ mA; it is known that $V_T \simeq 25$ mV; thus $R_e I_o/V_T \simeq (50 \times 2)/25 = 4$

To plot I_{C1}/I_o vs $(V_{B1}-V_{B2})/V_T$ we let

$x' = (V_{B1}-V_{B2})/V_T$, $x = (V_{BE1}-V_{BE2})/V_T$, $y = I_{C1}/I_o$

The problem now becomes that of plotting y vs. x' from a knowledge of the y vs. x curve (Fig. 15-9) From Eq. (2) $x' = x + 4(2y-1)$ or

$$x' = x + 8(y - \tfrac{1}{2})$$

In the Figure below we indicate the y vs. x curve (Fig. 15-9) by a dotted line and we show the y vs. x' curve with a solid line; also shown is the method of getting two typical points (one for positive, the other for negative x) on the new curve by utilizing the information on the old curve of Fig. 15-9.

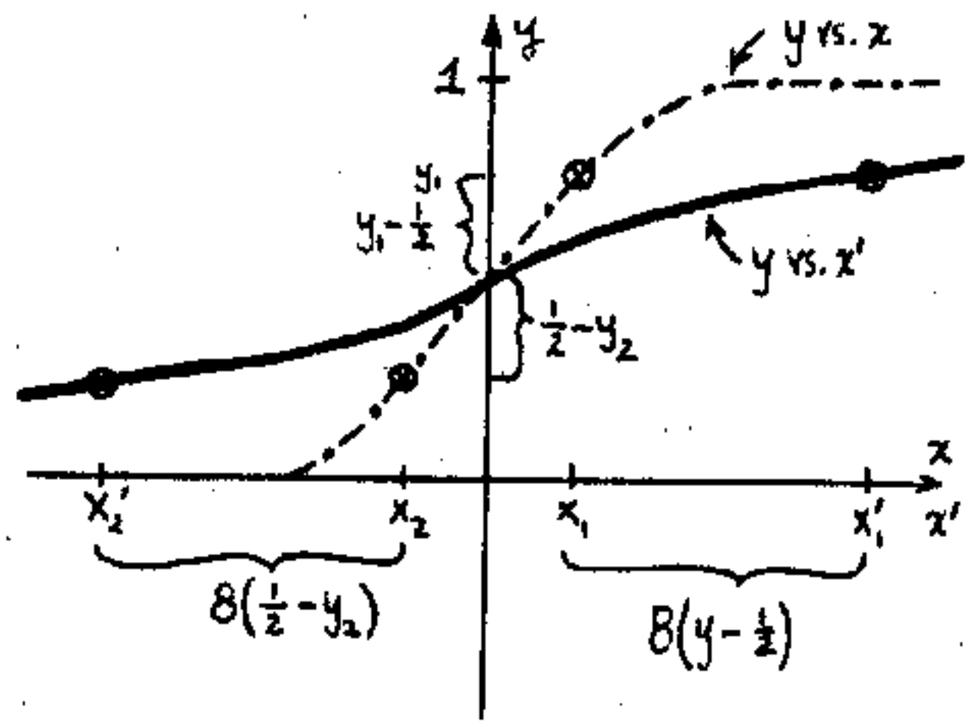

(c) From part (a): $V_{B1} - V_{B2} = V_{BE1} - V_{BE2} + R_e(2I_{C1} - I_0)$

From Eq. (15-22) replacing $V_{B1}-V_{B2}$ by $V_{BE1}-V_{BE2}$ we find $I_{C1} = \frac{I_0}{1+\epsilon^{-(V_{BE1}-V_{BE2})/V_T}}$ or

$I_{C1}(1+\epsilon^{-(V_{BE1}-V_{BE2})/V_T}) = I_0$, $\epsilon^{-(V_{BE1}-V_{BE2})/V_T} = \frac{I_0}{I_{C1}} - 1$

and $V_{BE1} - V_{BE2} = -V_T \ln(\frac{I_0}{I_{C1}} - 1)$. Then $V_{B1} - V_{B2} = -V_T \ln(\frac{I_0}{I_{C1}} - 1) + R_e(2I_{C1} - I_0)$. Thus $\frac{d(V_{B1}-V_{B2})}{dI_{C1}} =$

$$= +V_T\left(\frac{I_0}{I_{C1}^2} \times \frac{1}{\frac{I_0}{I_{C1}} - 1}\right) + 2R_e = +V_T\left(\frac{I_0}{I_{C1}^2} \times \frac{I_{C1}}{I_0 - I_{C1}}\right) + 2R_e$$

Hence $g'_{md} = \frac{dI_{C1}}{d(V_{B1}-V_{B2})} = \frac{1}{V_T\left(\frac{I_0}{I_{C1}} \times \frac{1}{I_0 - I_{C1}}\right) + 2R_e}$

At the operating point: $I_{C1}=\frac{I_0}{2}$ and $V_{B1}=V_{B2}$. Thus

$$1/g'_{md}=V_T\left(\frac{I_0}{I_0^2/4}\times\frac{I_0/2}{I_0-I_0/2}\right)+2R_e=\frac{4V_T}{I_0}+2R_e$$

any $g'_{md}=\frac{1}{4V_T/I_0+2R_e}=\frac{I_0/4V_T}{1+2R_eI_0/4V_T}$

(d) Since $g_{md}=I_0/4V_T$, $g'_{md}=\frac{g_{md}}{1+2R_eg_{md}}$.

15-18 (a) For each transistor, $I_C=\beta I_B$

The collector current is proportional to the collector area. We thus have $I_{C1}=K_1I_C$ and $I_C=I_{C1}/K_1$; $I_{C2}=K_2I_C=K_2(I_{C1}/K_1)=(K_2/K_1)I_{C1}$.

Writing KCL at the common base:

$$I_1=I_B+I_C+I_{B1}+I_{B2}=\frac{I_C}{\beta}+I_C+\frac{I_{C1}}{\beta}+\frac{I_{C2}}{\beta}=\frac{I_{C1}}{\beta K_1}+\frac{I_{C1}}{K_1}+\frac{I_{C1}}{\beta}+\frac{K_2}{K_1}\frac{I_{C1}}{\beta}$$

Thus

$\beta K_1I_1=I_{C1}(1+\beta+K_1+K_2)$ and $I_{C1}=\frac{\beta K_1}{1+\beta+K_1+K_2}I_1$

Q.E.D.

(b) If $\beta\gg 1+K_1+K_2$, then $I_{C1}=\frac{\beta K_1}{\beta}I_1=K_1I_1$

(c) $\frac{I_{C1}}{I_1}=\frac{50\times 2}{1+50+2+3}=1.786$ (instead of 2, as it would be obtained in part (b)).

15-19 (a) KCL at B_3: $I_1=I_{B3}+I_C=-\frac{I_{E3}}{\beta+1}+I_C=\frac{2I_B}{\beta+1}+I_C=\frac{2I_C}{(\beta+1)\beta}+I_C$. Thus $\beta(\beta+1)I_1=[2+\beta(\beta+1)]I_C$ and

$$I_2=I_C=\frac{\beta(\beta+1)}{2+\beta(\beta+1)}I_1$$

(b) $\frac{I_C}{I_1}=\frac{5\times 6}{2+5\times 6}=0.938$

For the current mirror of Fig.(15-12)

$$\frac{I_C}{I_1}=\frac{5}{5+2}=0.714$$

Thus the ratio I_C/I_1 (which should be equal to unity ideally) is improved much with the circuit of Fig. 15-14a, reaching to a value of approximately within 6% of unity.

15-20

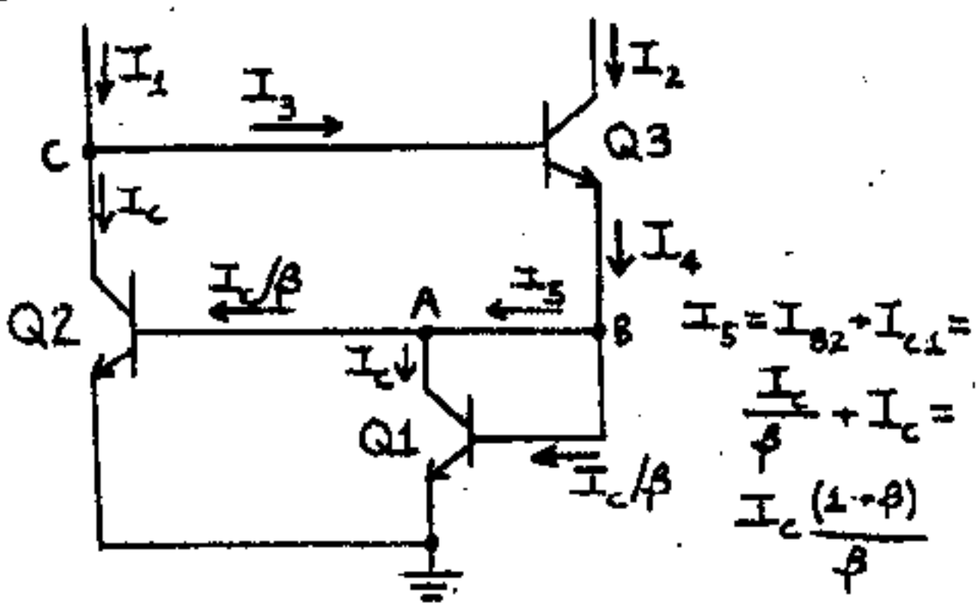

(a) Since $V_{BE1}=V_{BE2}$ then the collector currents I_C of Q1 and Q2 are the same and the base currents are I_C/β. Apply KCL to node A and obtain $I_5=I_C(\frac{1+\beta}{\beta})$. From KCL at node B we obtain

$$I_4=I_5+\frac{I_C}{\beta}=I_C(\frac{1+\beta}{\beta})+\frac{I_C}{\beta}=\frac{I_C}{\beta}(2+\beta)$$

$$I_3=\frac{I_4}{1+\beta}=I_C\frac{2+\beta}{(\beta)(1+\beta)}$$

$$I_2=\beta I_3=I_C\frac{2+\beta}{1+\beta}$$

(b) At node C, $I_1=I_C+I_3=I_C+I_C\frac{2+\beta}{(\beta)(1+\beta)}=\frac{I_C(\beta^2+\beta+2+\beta)}{(\beta)(1+\beta)}$

$$I_1=\frac{\beta^2+2\beta+2}{(\beta)(1+\beta)}I_C$$

(c) $\frac{I_2}{I_1}=\frac{2+\beta}{1+\beta}\frac{(\beta)(1+\beta)}{\beta^2+2\beta+2}=\frac{\beta^2+2\beta}{\beta^2+2\beta+2}=\frac{1}{1+\frac{2}{\beta^2+2\beta}}$

(d) From Eq. (15-29) $\frac{I_2}{I_1}=\frac{1}{1+\frac{2}{\beta^2+\beta}}$

Because of the factor 2β instead of β in these two equations I_2 is slightly closer to I_1 for this circuit than for the circuit of Fig. 15-14a.

$$\frac{I_2}{I_1}=\frac{1}{1+\frac{2}{25+10}}=0.946$$

From Eq. (15-29) $\frac{I_2}{I_1}=\frac{1}{1+\frac{2}{25+5}}=0.938$

Note that even with β as low as 5 there is only about 1% difference in these two ratios.

15-21 (a) From Eq. (15-27) with $\beta\gg 2$ $I_{C2}=I_1$ and from Fig. 15-12a

$$R=(V_{CC}-V_{BE})/I_1=(15-0.7)/0.01=1{,}430\ k\Omega$$

This is an extremely high value to be fabricated on a chip of reasonable size.

(b) The circuit now becomes

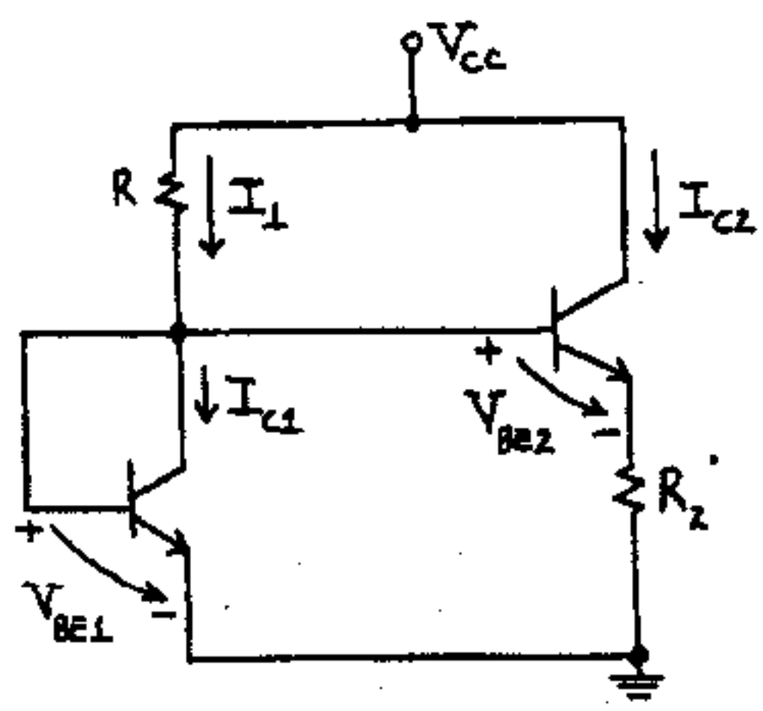

Using Eq. (15-21) $I_{C1}=I_S \exp(V_{BE1}/V_T)$ and $I_{C2}=I_S \exp(V_{BE2}/V_T)$. Thus

$\frac{I_{C1}}{I_{C2}} = \exp((V_{BE1}-V_{BE2})/V_T)$, where, from the above Figure $V_{BE1}-V_{BE2} \approx R_2 I_{C2}$. Hence

$I_{C1}/I_{C2}=\exp(R_2 I_{C2}/V_T)$ and $R_2 I_{C2}/V_T = \ln(I_{C1}/I_{C2})$

Finally,

$$R_2 = \frac{V_T}{I_{C2}} \ln\left(\frac{I_{C1}}{I_{C2}}\right), \quad \text{Q.E.D.} \qquad (1)$$

(c) Neglecting I_{B1} and I_{B2}, $I_{C1} \approx I_1 = (V_{CC}-V_{BE})/R = (15-0.7)/10 = \underline{1.43 \text{ mA}}$, a reasonable value.

From Eq. (1) above $R_2 \approx \frac{26 \text{ mV}}{0.01 \text{ mA}} \ln\left(\frac{1.43}{0.01}\right) \Omega$

$2{,}600 \times 4.963\ \Omega = \underline{12.9\ \text{k}\Omega}$

15-22 (a) If we neglect base currents, $I_1 = I_{C1} = I_S \exp(V_{BE1}/V_T)$ from Eq. (15-21). Also $I_2 = I_{C2} = I_S \exp(V_{BE2}/V_T)$. Thus

$$(V_{BE1}-V_{BE2})/V_T = \ln(I_1/I_2) \qquad (1)$$

Applying KVL to the loop containing R_1 and R_2 in Fig. 15-14b, we have $V_{BE1}-V_{BE2} = R_1 I_1 - R_2 I_2$ (2)

From (1) and (2) $R_1 I_1 - R_2 I_2 = V_T \ln(I_1/I_2)$, and

$$\frac{R_2 I_2}{R_1 I_1} = 1 - \frac{V_T \ln(I_1/I_2)}{R_1 I_1} \qquad \text{Q.E.D.}$$

(b) We see from the above equation that the error is maximum for the maximum ratio of (I_1/I_2) or (I_2/I_1) which is 10 in our case. Thus the maximum error is

$$\pm \frac{V_T \ln(10)}{R_1 I_1} = \pm \frac{0.026 \times 2.30}{1} = \pm 0.0598$$

or $\underline{\pm 5.98\%}$

15-23 The transistor pair Q1-Q2 forms a current repeater, hence the current I through the 10 kΩ resistor is equal to that through the 5 kΩ.

$I = (15\text{ V} - V_{BE2})/10 = (15-0.7)/10 = 1.43$ mA

$V_2 - V_1 = V_{BE3} + I \times 5 = 0.7 + 1.43 \times 5 = 7.85$ V

15-24 The effective dynamic resistance is defined as $R_o = V/I$ where V and I are the a-c measurements of the quantities indicated in Fig. 15-18. To find R_o we replace the transistor by its approximate hybrid-π model, thus obtaining the following Figure:

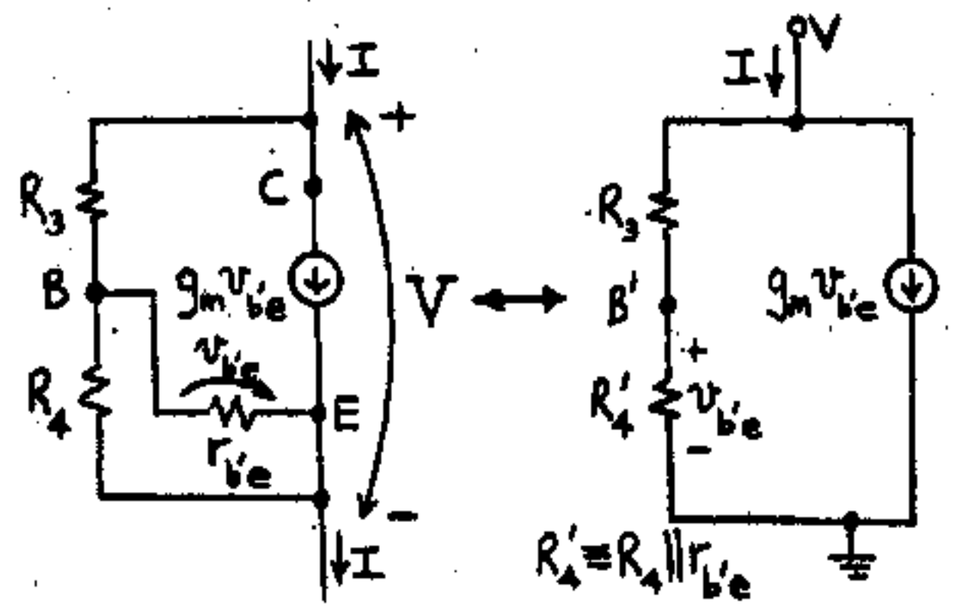

Since $v_{b'e} = \frac{R_4' V}{R_3 + R_4'}$

$$I = \frac{V}{R_3+R_4'} + \frac{g_m R_4' V}{R_3+R_4}$$

$$\therefore R_o = \frac{V}{I} = \frac{R_3+R_4'}{1+g_m R_4'}$$

(b) Dividing numerator and denominator by R_4' gives

$$R_o = \frac{1+\frac{R_3}{R_4'}}{g_m + \frac{1}{R_4'}} = \frac{1+R_3\left(\frac{1}{R_4'}+g_{b'e}\right)}{g_m + \frac{1}{R_4'} + g_{b'e}}$$

For $g_m \gg \frac{1}{R_4}$ and $g_m \gg g_{b'e}$

$$R_o = \frac{1}{g_m} + \frac{R_3}{g_m R_4} + \frac{R_3 g_{b'e}}{g_m} = \frac{R_4+R_3}{g_m R_4} + \frac{R_3}{h_{fe}}$$

since $h_{fe} = g_m r_{b'e} = g_m/g_{b'e}$.

15-25 (a) Let us start with the current source Q1: The dc voltage V_{BN1} of the base of Q1 with respect to ground N is

$$V_{BN1} = \frac{[-V_{EE}+2(0.7)]R_5}{R_4+R_5} = \frac{(-6+1.4)(3.2)}{1.5+3.2} = \underline{-3.13\text{ V}}$$

(b) $I_o \approx I_1 = \frac{V_{EE}+(V_{BN1}-0.7)}{R_1} = \frac{6-3.83}{2.2} = \underline{0.986\text{ mA}}$

If it is assumed that the integrated transistors Q2 and Q3 are identical, one-half of I_1 will flow through each:

$I_{C2} = I_{C3} = \underline{0.493\text{ mA}}$

(c) The dc voltage of the base of Q4 and Q5 with respect to ground is

$V_{BN4} = V_{BN5} = V_{CC} - I_{C3} R_3 = 6 - 0.493 \times 7.75 \approx \underline{2.18\text{ V}}$

(d) The dc voltage at the common emitter Q4 and Q5 is

$V_{EN4} = V_{BN4} - V_{BE4} = 2.18 - 0.7 = \underline{1.48\text{ V}}$

(e) The current in R_6 is

$$I_6 = \frac{V_{EN4}}{R_6} = \frac{1.48}{1.5} = 0.987 \text{ mA}$$

Since $I_6 = I_{C4} + I_{C5} = 2I_{C5}$, then $I_{C5} = 0.494$.

(f) The base voltage of Q6, which equals the collector voltage V_3 of Q5, is

$$V_3 = V_{BN6} = V_{CN5} = V_{CC} - I_{C5}R_7 = 6-(0.494)(3) = \underline{4.52 \text{ V}}$$

(g) The output V_4 of the emitter follower is

$$V_4 = V_{EN6} = V_{BN6} - V_{BE6} = 4.52-0.7 = \underline{3.82 \text{ V}}$$

(h) Note that Q7 is biased by D3 in the manner explained in Fig. 15-12b. Hence, following our discussion in Sec. 15-5 we find

$$I_{C7} \approx I_8 = \frac{V_{EE}-V_{D3}}{R_8} = \frac{6.0-0.7}{3.4} = \underline{1.56 \text{ mA}}$$

(i) The voltage from the base Q8 to ground is

$$V_{BN8} = V_{BE8} + V_{D4} - V_{EE} = 0.7+0.7-6 = \underline{-4.60 \text{ V}}$$

(j) The currents in R_9 and R_{10} are

$$I_9 = \frac{V_{EN4}-V_{BN8}}{R_9} = \frac{3.82+4.60}{6} = 1.40 \text{ mA}$$

(k) $I_{10} = I_{C7} - I_9 = 1.56-1.40 = 0.16$ mA

(l) Finally, the dc output voltage is

$$V_0 = V_{BN8} + I_{10}R_{10} = -4.60+(0.16)(30) = \underline{0.20 \text{ V}}$$

(m) From Eq. (15-25) $h_{ie} = h_{fe}V_T/I_{C2} = 100 \times 0.026 \text{ V}/0.493 \text{ mA} = 5.27 \text{ k}\Omega$

The differential input resistance of the second stage, consisting of the differential pair Q4 and Q5, is $2h_{ie}$. However, since double-ended signals are applied to Q4 and Q5, then the resistance looking into each base is half this value, or h_{ie}. This result follows from the equivalent circuit of Fig. 15-7a, which indicates that the emitter is effectively at ground potential. Since it is known that h_{fe} for transistor Q4 and Q5 is also 100, then $h_{ie} = 5.2$ kΩ. This resistance is effectively connected from each collector of Q2 and Q3 to ground. Hence the equivalent collector-circuit load is

$$R_{L2} = R_{L3} = 7.75 \| 5.27 = 3.14 \text{ k}\Omega$$

The differential gain $A_d = A_{V1}$ is given by Eq. (15-13) multiplied by 2 (because the collector-to-collector output is twice the collector-to-ground output). For the first stage,

$$A_{V1} = \frac{V_2}{V_1} = \frac{h_{fe}R_{L2}}{h_{ie}} = \frac{100 \times 3.14}{5.27} = \underline{59.6}$$

(n) For the second stage, $h_{fe} = 100$, $h_{ie} = 5.27$ kΩ, and the load is $R_7 = 3$ kΩ if we neglect the loading on Q5 of the emitter follower Q6 (whose input impedance is high compared with 3 kΩ).

Since the second stage has a single-ended output, the differential gain is

$$A_{V2} = \frac{V_3}{V_2} = -\frac{1}{2}\frac{h_{fe}R_7}{h_{ie}} = -\frac{100 \times 3}{2 \times 5.27} = -28.5$$

For the emitter follower, $A_{V3} \approx 1$. The output stage uses voltage-shunt feedback because of R_9 and R_{10}. From Eq. (15-1)

$$A_{V4} \approx -\frac{R_{10}}{R_9} = -\frac{30}{6} = -5$$

Hence the overall OP AMP differential voltage gain is

$$A_V = (59.6)(-28.5)(-5) = \underline{+8,493}$$

Note that node 1 is the noninverting input terminal

15-26 (a) $I_4 = \dfrac{15-V_{EB12}-V_{BE11}-(-15)}{39} = \dfrac{30-0.7-0.7}{39}$

$= \underline{0.733 \text{ mA}}$.

(b) Identifying the similarities between Figs. 15-14b and 15-16 we see that Eq. (15-30) can be used here if I_{C2}, I_{C1}, and R_2 are replaced by I_3, I_4, and 5 kΩ, respectively. Thus, from Eq. (15-30) (with resistance values in MΩ and currents in μA),

$$5 \times 10^{-3} = \frac{0.026}{I_3} \ln \frac{I_4}{I_3} \quad \text{or} \quad I_3 = 5.2(\ln 733 - \ln I_3)$$

$$34.3 - I_3 = 5.2 \ln I_3 \qquad (1)$$

We solve this equation graphically as shown below:

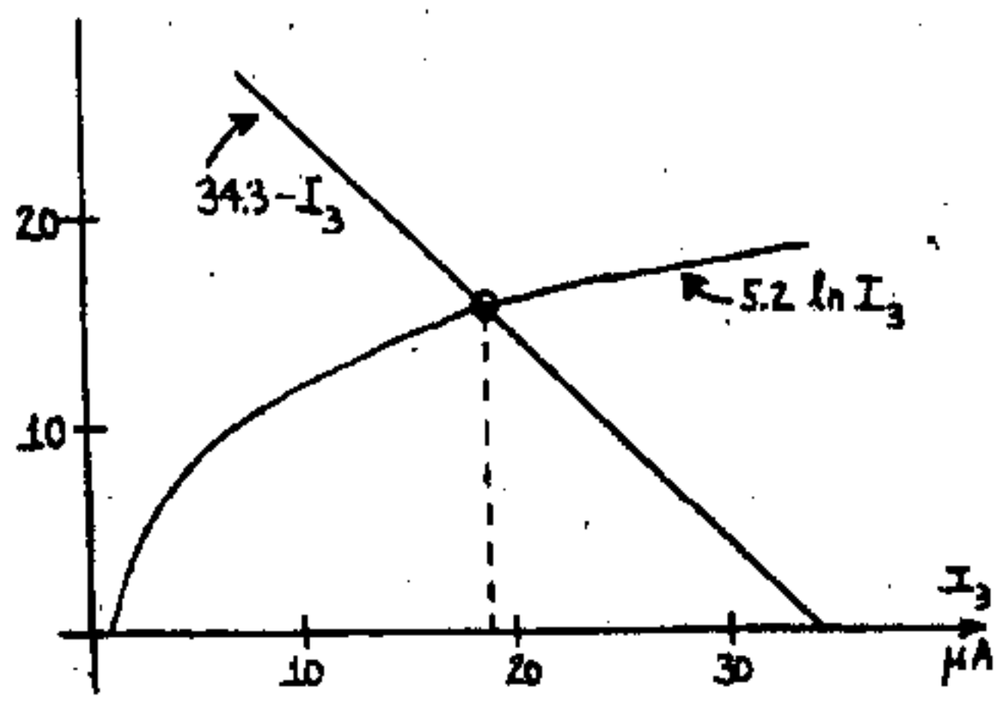

The graphical solution $I_3 = \underline{19 \ \mu A}$ can be also verified numerically from Eq. (1).

(c)

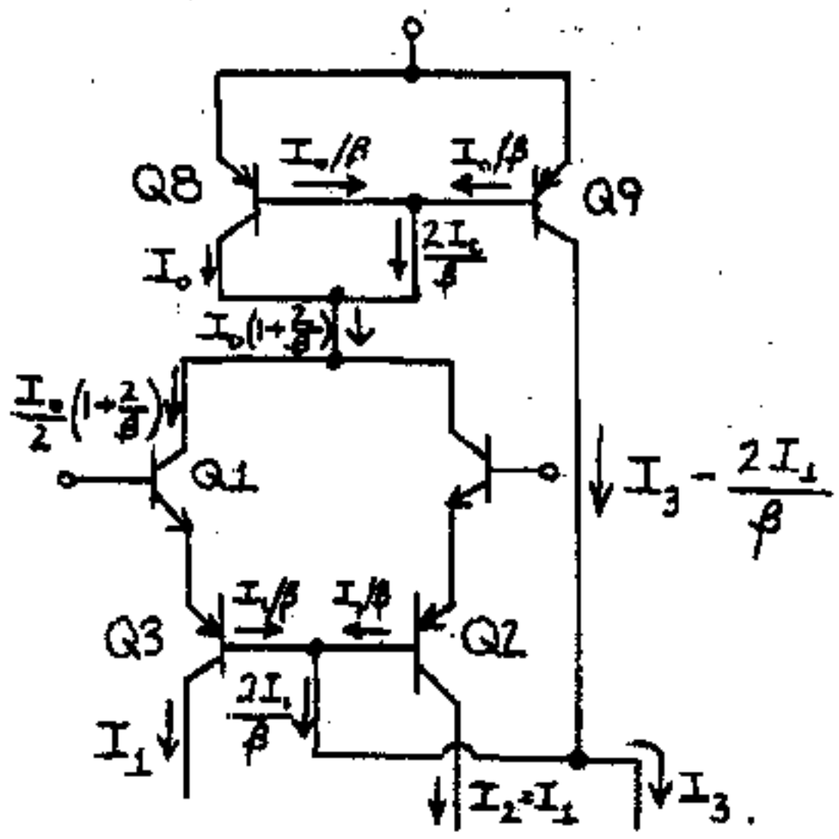

KCL at Q3: $\frac{I_0}{2}(1+\frac{2}{\beta}) = I_1 + \frac{I_1}{\beta} = I_1(1+\frac{1}{\beta})$ or

$I_0 = 2I_1\left(\frac{1+\frac{1}{\beta}}{1+\frac{2}{\beta}}\right) = 2I_1(\frac{\beta+1}{\beta+2})$ because $V_{BE8} = V_{BE9}$

then $I_{C8} = I_{C9}$ (a current repeater)

Thus $I_0 = I_3 - \frac{2I_1}{\beta}$ (2)

Put (1) into (2): $2I_1(\frac{\beta+1}{\beta+2} + \frac{1}{\beta}) = I_3$

$2I_1\frac{\beta^2+2\beta+2}{(\beta)(\beta+2)} = I_3$ or $I_1 = \frac{1}{2}(\frac{\beta^2+2\beta}{\beta^2+2\beta+2})I_3$

For $\beta = 4$ $I_1 = \frac{1}{2}(\frac{16+8}{16+8+2})I_3 = \frac{24}{52}I_3 = 0.462\ I_3$

15-27 (a) If $I_{io} = 0$ then from the text example $V_o = 0$. Hence, using superposition we may neglect I_{B2}. The drop across R_1 is $-I_{io}R_1$. Since the voltage between input terminals is 0 then this voltage appears across R and the current in R is $-I_{io}R_1/R$. This same current flows in R' and hence

$$V_o = -I_{io}\frac{R_1}{R}(R+R') = -I_{io}R'$$

because $R_1 = \frac{RR'}{R+R'}$

(b) $V_o = -IR - (I - I_{B2})R' = -I(R+R') + I_{B2}R'$

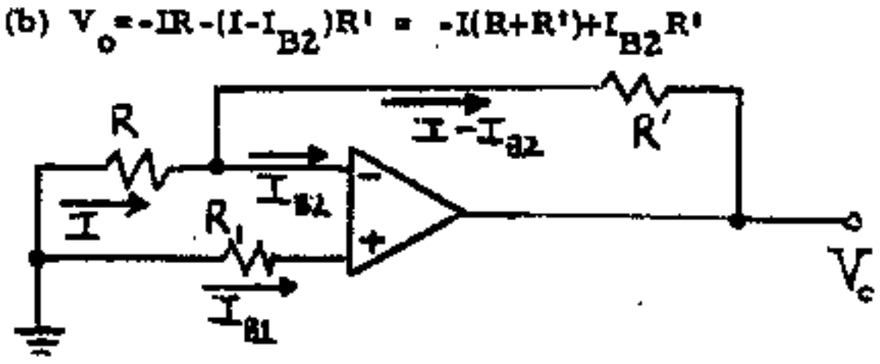

Because of zero voltage between input terminals

$$I_{B1}R_1 = IR$$

$$\therefore\ V_o = -\frac{I_{B1}R_1}{R}(R+R') + I_{B2}R' = -I_{B1}R' + I_{B2}R'$$

because $R_1 = RR'/(R+R')$

$$\therefore\ V_o = -(I_{B1} - I_{B2})R' = -I_{io}R'$$

15-28 (a) The slew rate is SR=1 V/μs from Table 15-1. Since $v_o = V_m \sin\omega t$, $dv_o/dt = V_m\omega\cos\omega t$; hence the maximum value of the rate of change of v_o with respect to time (which is SR, by definition) is

$SR = V_m\omega = V_m 2\pi f$ and the frequency at which distortion sets in is

$$f = \frac{SR}{2\pi V_m} = \frac{1\ V/10^{-6}s}{2\pi 5\ V} = 31.83\ kHz. \quad (1)$$

(b) From the definition of the full-power bandwith, we conclude that Eq. (1) can be used with 5 V replaced by 10 V. Hence

$$f_{full\text{-}power} = \frac{31.83}{2} = 15.91\ kHz.$$

15-29

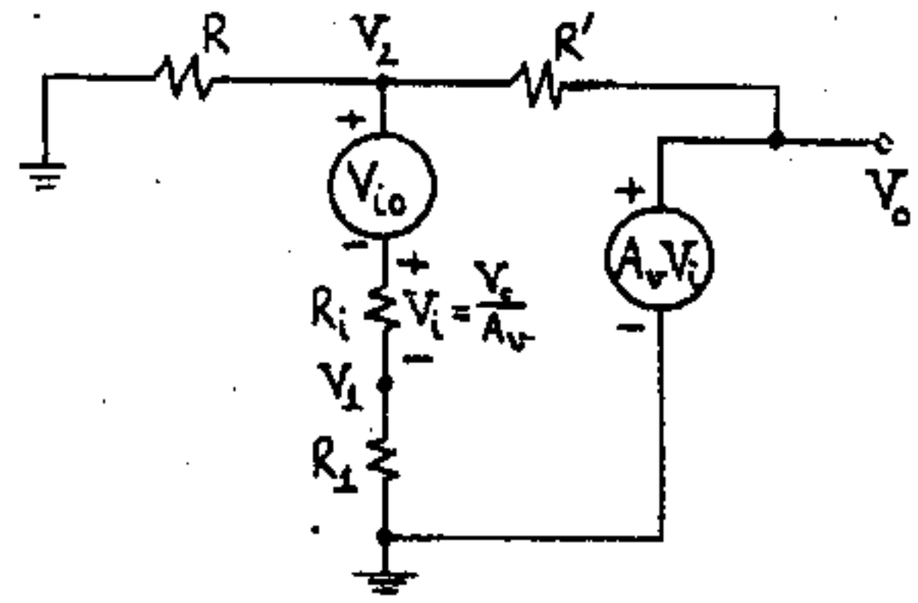

KVL from V_2 to ground gives $V_2 = V_{io} + \frac{V_o}{A_v}\frac{R_i+R_1}{R_i}$ (1). KCL at node V_2 gives $\frac{V_2}{R} + \frac{V_2}{R'} + \frac{V_o}{A_vR_1} - \frac{V_o}{R'} = 0$ (2)

Put Eq. (1) into (2)

$$(\frac{1}{R} + \frac{1}{R'})(V_{io} + \frac{V_o}{A_v}\frac{R_i+R_1}{R_i}) + V_o(\frac{1}{A_vR_1} - \frac{1}{R'}) = 0$$

$$\frac{R+R'}{RR'}V_{io} + V_o[(\frac{R+R'}{RR'})(\frac{R_i+R_1}{A_vR_i}) + \frac{R'-A_vR_i}{A_vR_iR'}] = 0$$

$$-A_vR_1(R+R')V_{io} = V_o[(R+R')(R_i+R_1) + RR' - A_vR_iR]$$

Q.E.D.

15-30 (a) See Fig. (a):

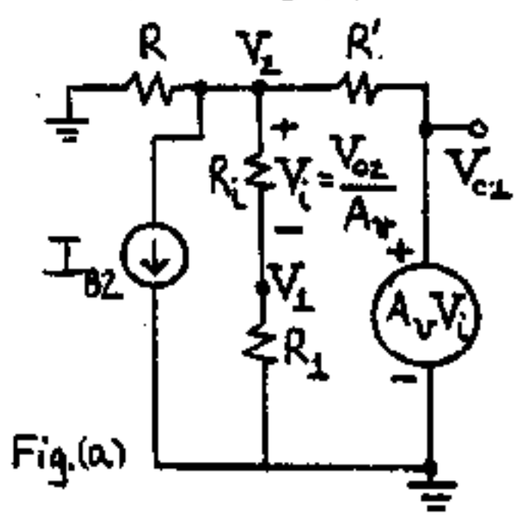

Fig. (a)

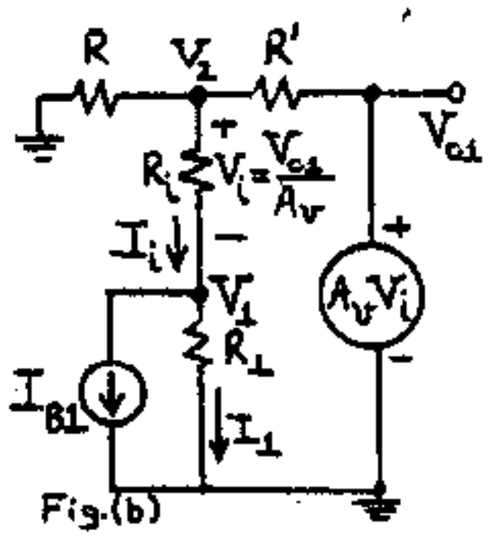

Fig. (b)

$$V_2 = \frac{V_{o2}}{A_v}\frac{R_i+R_1}{R_i} \quad (1)$$

KCL at node V_2 gives

$$\frac{V_2}{R} + \frac{V_2}{R'} + I_{B2} + \frac{V_{o2}}{A_v R_i} - \frac{V_{o2}}{R'} = 0.$$

(1) into (2) yields

$$\left(\frac{V_{o2}}{A_v}\,\frac{R_i+R_1}{R_i}\right)\left(\frac{R+R'}{RR'}\right) + \frac{V_{o2}}{A_v R_i} - \frac{V_{o2}}{R'} = -I_{B2}$$

$$V_{o2}[(R_i+R_1)(R+R') + RR' - A_v R_i R] = -I_{B2} A_v R_i RR'.$$

Q. E. D.

(b) See Fig. (b): $I_1 = I_i - I_{B1} = \frac{V_{o1}}{A_v R_i} - I_{B1}$

KVL at node V_2 is

$$V_2 = I_i R_i + I_1 R_1 = \frac{V_{o1}}{A_v} + \frac{V_{o1} R_1}{A_v R_i} - I_{B1} R_1 \qquad (3)$$

KCL at node V_2 is

$$\frac{V_2}{R} + \frac{V_2}{R'} - \frac{V_{o1}}{R'} + \frac{V_{o1}}{A_v R_i} = 0$$

Put (3) into (4) and solve for V_{o1}.

$$\frac{R+R'}{RR'}\left(\frac{V_{o1}}{A_v} + \frac{R_1 V_{o1}}{A_v R_i} - R_1 I_{B1}\right) - \frac{V_{o1}}{R'} + \frac{V_{o1}}{A_v R_i} = 0$$

$$[(R+R')(R_i+R_1) + RR' - A_v R R_i] V_{o1} = I_{B1} A_v (R+R') R_i R_1.$$

Q. E. D.

(c) With $I_{B1} \approx I_{B2} = I_B$ we obtain from parts (a) and (b)

$$V_{o1} + V_{o2} = \frac{R_i R_1 (R+R') A_v - R' R R_i A_v}{(R_i+R_1)(R+R') + RR' - A_v R R_i} I_B$$

Thus $V_{o1} + V_{o2}$ is minimized when the numerator is zero, or $R_i R_1 (R+R') A_v - R' R R_i A_v = 0$. Thus $R_i = R'R/(R+R')$ Q. E. D.

15-31 Since $R_i = \infty$, the input currents are zero and the same current I flows through both R and R'. Thus

$$V' = RV_o/(R+R') \qquad (1)$$

The output V_{o1} of the first OP AMP is $V_{o1} = A_{v1}(V' - V_1)$, and, using superposition,

$$V_o = A_{v2}(V_{o1} - V_2) = A_{v2}[A_{v1}(V' - V_1) - V_2] \qquad (2)$$

Substituting the expression for V' from (1) into (2)

$$V_o[1 - A_{v2} A_{v1} R/(R+R')] = -A_{v2} A_{v1} V_1 - A_{v2} V_2$$

and, if $A_{v2} A_{v1} R/(R+R') \gg 1$, this yields

$$V_o = \frac{R+R'}{R} V_1 + \frac{R+R'}{RA_{v1}} V_2 = \left(1 + \frac{R'}{R}\right)(V_1 + V_2/A_{v1})$$

15-32 (a) $V_o = V_{io}(1 + R'/R)$ Eq. (15-33)

From Table 15-1 at 25°C $V_{io} = 5$ mV, and

$dV_{io}/dT = 5\ \mu V/°C = 0.005$ mV/°C

Thus at 175°C $V_{io} = 5 + (0.005)(175-25) = 5.75$ mV

and $V_o \approx 5.75 \times 10^3$ mV = 5.75 V, where Eq. (15-33) was used.

(b) $V_o = 0.55 = V_{io}(1+100)$ $V_{io} = \frac{0.55}{101} \times 1000$ mV

$= 5.45$ mV

$V_{io} = 5.45 = 5 + (T-25)(0.005)$

$$T = 25 + \frac{0.45}{0.005} = 25 + 90 = 115°C.$$

15-33 (a) This is clearly a voltage-shunt feedback amplifier; hence the tr sresistance is stabilized. Following the rules of Chap. 12, we obtain the circuit shown below:

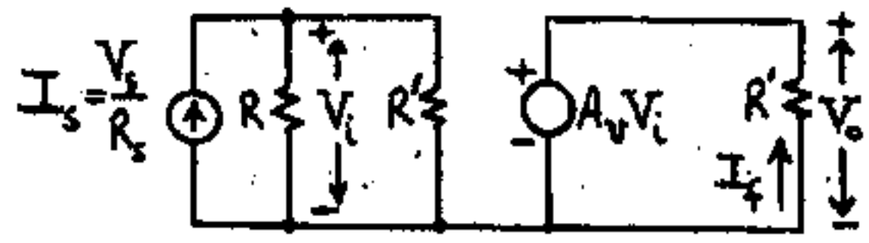

(b) From the figure $I_f = -\frac{V_o}{R'}$ and $\beta = -\frac{1}{R'}$

Also $R_M = \frac{V_o}{I_s} = \frac{V_o R_{11}}{I_s R_{11}} = \frac{V_o R_{11}}{V_i} = A_V R_{11}$ where

$R_{11} = R \| R'$

(c) $A_{Vf} = \frac{V_o}{V_s} = \frac{V_o}{I_s R} = \frac{R_{Mf}}{R}$. Since $R_{Mf} = \frac{R_M}{1+\beta R_M}$

we find

$$A_{Vf} = \frac{\frac{A_V R_{11}}{R}}{1 - \frac{A_V R_{11}}{R'}} \quad \text{where} \quad R_{11} = \frac{RR'}{R+R'}$$

R_{Mf}

$A_V = \frac{R_M}{R}$

$A_{Vf} = \frac{R_{Mf}}{R}$

Thus $A_{Vf} = \frac{R'}{R+R'}\,\frac{A_V}{1 - \frac{RA_V}{R+R'}}$ which is Eq. (15-48).

15-34 Use superposition for Fig. 15-2:

$$V_i = V_s \frac{R'}{R+R'} + V_o \frac{R}{R+R'} = \frac{V_o}{A_V}$$

$$\therefore\ V_o\left(\frac{A_V R}{R+R'} - 1\right) = -V_s \frac{R' A_V}{R+R'}$$

$$\therefore\ A_{Vf} = \frac{V_o}{V_s} = +\frac{R'}{R+R'}\,\frac{A_V}{1 - \frac{RA_V}{R+R'}} \qquad \text{Q. E. D.}$$

15-35 From Fig. 15-4 $\frac{-V_o R}{R+R'} + V_i + V_s = 0$, and since

$V_i = \frac{V_o}{A_V}$, $V_o\left(\frac{A_V R}{R+R'} - 1\right) = V_s A_V$. Thus

$$A_{Vf} = \frac{V_o}{V_s} = \frac{-A_V}{1 - \frac{A_V R}{R+R'}} \qquad \text{Q. E. D.}$$

15-36 (a)

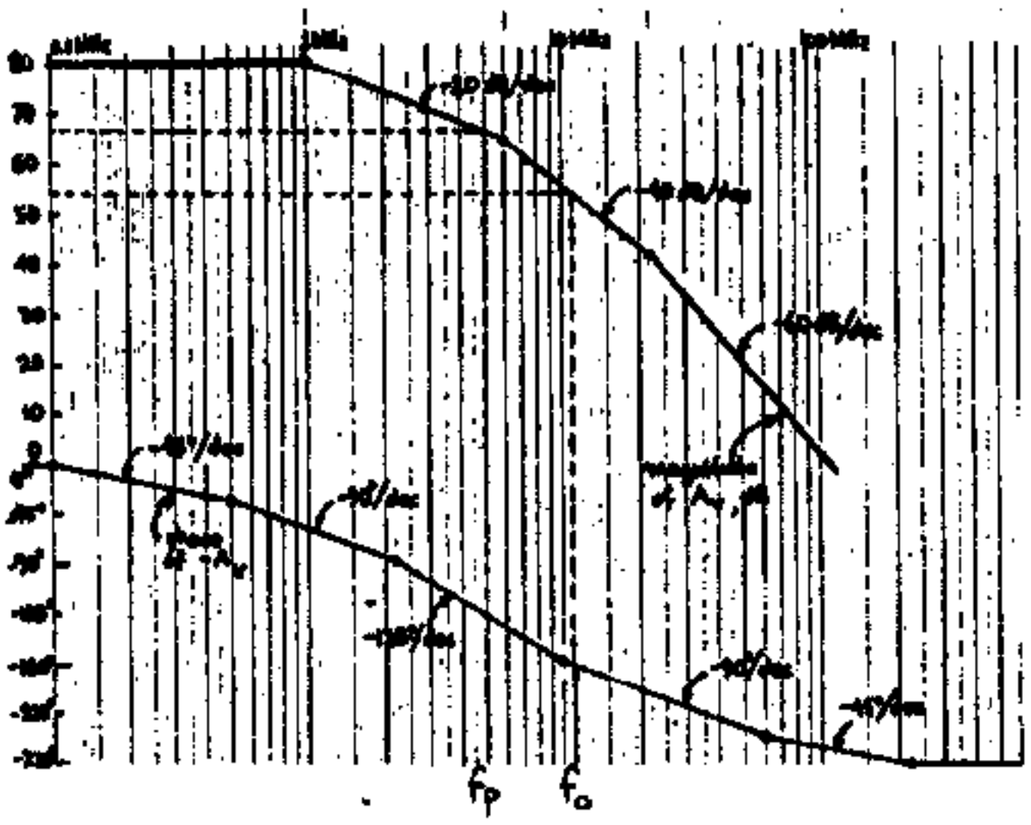

(b) The frequency of oscillation is that for which the phase is -180°, or f_o = 11 MHz.

(c) At f_o = 11 MHz the magnitude of A_V is 54 dB If the ammount of feedback exceeds 80-54=26 dB the amplifier will break into oscillations.

The minimum closed-loop gain A_{Vf} for which the circuit becomes unstable is obtained from Eq. (15-53), from which

$$20 \log\left(\frac{R}{R+R'}\right) = -54 \quad \text{and} \quad \frac{R+R'}{R} = 10^{54/20} = 501.$$

The closed-loop gain is $A_{Vf} = -R'/R = -500$.

If the low frequency gain is less than 500, the circuit will oscillate.

(d) Since the non-inverting closed-loop gain is $1+R'/R$, if we try to reduce its gain below 501, the circuit will oscillate (see part (c)). Thus this circuit is not suitable as a unity voltage follower.

(e) For 45° phase margin we want the phase to be -135°; this occurs at f_p = 5 MHz, for which A_V=66.5 dB (see Figure), and from Eq. (15-53) $20 \log[R/(R+R')] = -66.5$. Thus $\frac{R+R'}{R} = 10^{(66.5/20)} = 2113$. and $R'/R = 2112$. Thus the minimum low-frequency closed-loop gain is 2,112 for a phase margin of 45°.

(f) After the introduction of f_d the magnitude remains at 80 dB from 0 Hz up to f_d. Starting from f_d it drops toward 0 dB at a rate of -20 dB/dec (this continues up to the next pole, which occurs at 1 MHz). Hence f_d is $\frac{(80-0)\text{dB}}{20\ \text{dB/dec}}$ = 4 decades lower than 1 MHz, since we are given that the magnitude is 0 dB at 1 MHz. Thus f_d= 1 MHz/10^4 = 100 Hz.

15-37 (a) $|A_V|$ falls off 20 dB/decade. Hence to fall 100 dB requires 5 decades of fall or if we start at 10 Hz, we reach 10^6 Hz= 1 MHz because $10^6/10 = 10^5$ is 5 decades.

(b)

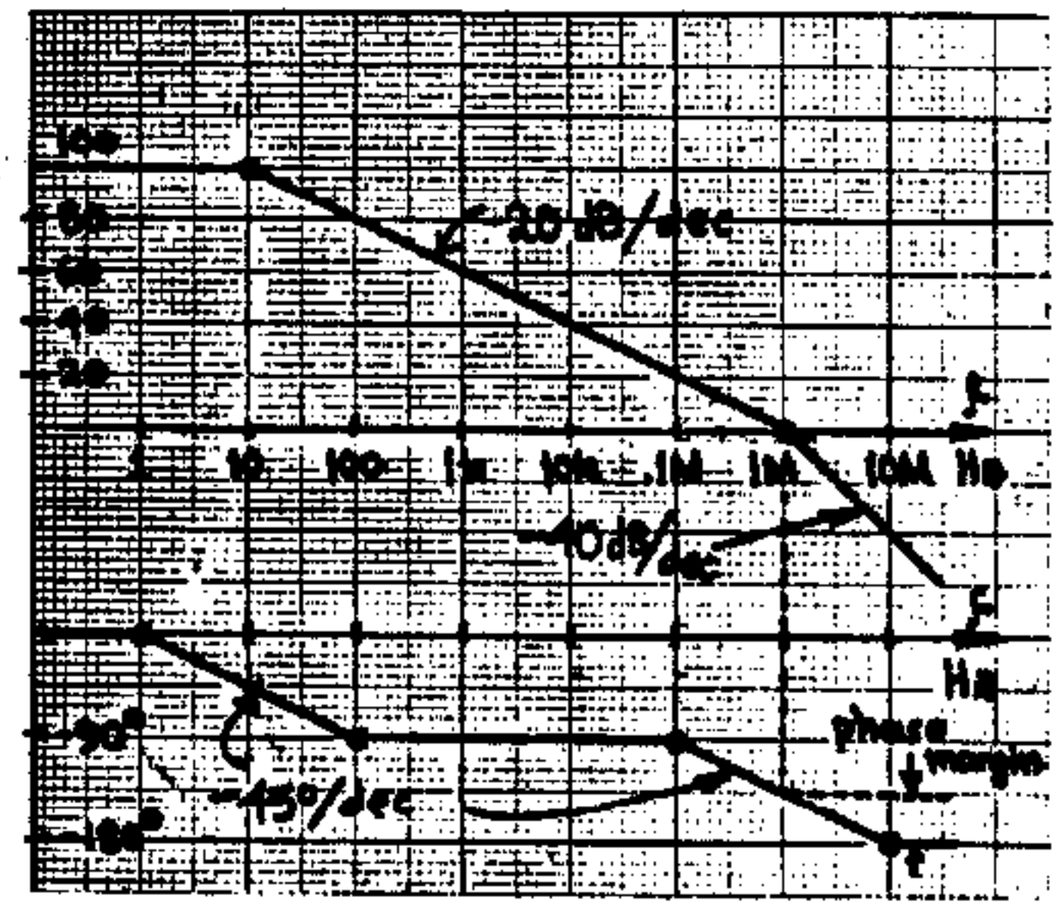

(c) At 0 dB the phase is -135°. Hence the phase margin is 45° and the system is stable

15-38 (a) The poles are at 1 kHz, and at 1, 10, and 50 MHz. Thus the Bode plots are shown below.

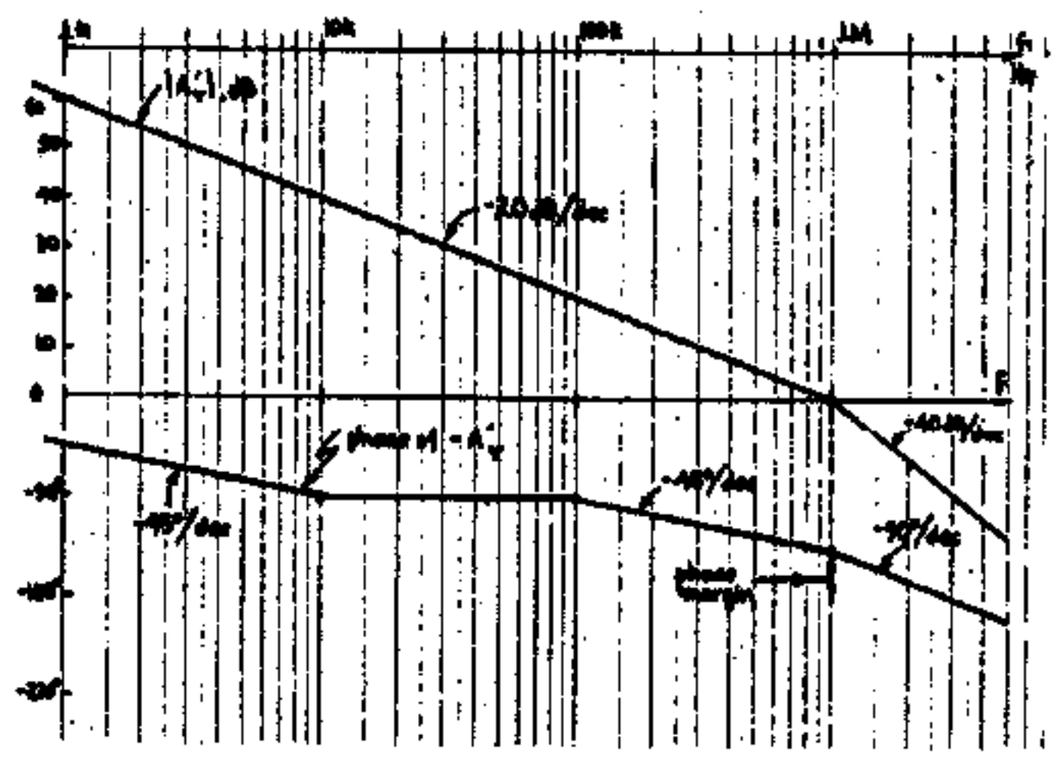

(b) Phse margin = 45° because the phase is -135° at the frequency for which the gain is unity (0 dB)

(c) From Eq. (14-57)

$$\beta R_{Mo} = 60 - 0 = \underline{60\ dB}$$

(d) Certainly, because the phase margin (at 0 dB, unity gain) is 45°.

15-39 $$\frac{V_3}{V_2} = \frac{R_c + 1/j2\pi f C_c}{R_c + R_y + 1/j2\pi f C_c} = \frac{1 + j2\pi f R_c C_c}{1 + j2\pi f C_c (R_c + R_y)} \qquad (1)$$

Letting $f_z = 1/2\pi R_c C_c$ and $f_p = 1/2\pi C_c (R_c + R_y)$

(1) becomes

$$\frac{V_3}{V_2} = \frac{1 + j(f/f_p)}{1 + j(f/f_z)} \qquad \text{Q.E.D.}$$

15-40 (a) The midband gain A_{Vfo} of the feedback amplifier is

$$A_{Vfo} = A_{V_o}/(1 + \beta A_{V_o}), \text{ or (in dB)}$$

$$20\log|A_{Vfo}| = 20\log|A_{V_o}| - 20\log(1 + \beta A_{V_o}) \qquad (1)$$

where $A_{V_o} = -10^3$ and $20\log|A_{V_o}| = 60$ from Eq. (14-55). By definition, the amount of feedback (in dB) at midband is $20\log(1 + \beta A_{V_o})$ and this is given in the statement to be 25 dB. Thus from (1) $20\log A_{Vfo} = 60 - 25 = 35$ dB; notice also that since $1 + \beta A_{V_o}$, we have (in dB)

$20\log(\beta) + 20\log(A_{V_o}) = 20\log(\beta A_{V_o}) = 25$ and

$20\log(\beta) = 25 - 20\log(A_{V_o}) = 25 - 60 = -35$

(i) Fig. 14-20 To find the bandwidth draw a horizontal line at the height of 35 dB. This intersects the magnitude Bode plot at $f_{Hu} = \underline{13\ MHz}$ (=bandwidth). Since β is -35 dB the magnitude of the loop gain βA_V is the same in shape as that of A_V in Fig. 14-20 but displaced downward by 35 dB. This magnitude plot crosses 0 dB at $f_H = 13$ MHz, where the phase is $-165°$. Hence phase margin = 180-165 = $\underline{15°}$

(ii) <u>Pole-zero compensation</u> (Fig. 15-32): The horizontal at the level of 35 dB intersects the magnitude plot of $|A_V|$ at $f_{Hps} = \underline{3.5\ MHz}$, where the phase is -115°, or phase margin = 180-115=$\underline{65°}$.

(iii) <u>Dominant-pole compensation</u> (Fig. 15-32): The 35-dB horizontal yields $f_{Hd} = \underline{20\ kHz}$, where the phase is -90°, (due to the dominant pole at 1 kHz). Thus phase margin = 90°.

Summarizing,

	Uncompensated	Pole-zero compensation	Dominant-pole compensation
Bandwidth	13 MHz	3.5 MHz	20 kHz
Phase margin	15°	65°	90°

Clearly the largest phase margin is the dominant pole and hence this configuration is the most stable. However, it has the smallest bandwidth. On the other hand, the uncompensated amplifier has the widest bandwidth, but is the least stable since it has the smallest phase margin.

(b) Assume, of course, that the added zero cancels the lowest pole of Eq. (14-55), which, occurs at 1 MHz. The magnitude Bode plot of $|A'_V|$ starts level at 60 dB, and starts dropping from the new pole f_p at -20 dB/dec (the next break occurs at the next pole at f=10 MHz after which the curve drops at -40 dB/dec). Since we are given that the curve reaches 0 dB at 10 MHz, we deduce that f_p is 60/20=3 decades below 10 MHz, or

$$f_p = 10\ MHz/10^3 = \underline{10\ kHz.}$$

(c) Parts of the magnitude and phase curves for the amplifier of part (b) are shown in the Figure below. The bandwidth is that frequency f'_{Hps} where the 35-dB horizontal meets the $|A'_V|$ magnitude plot. One way to find this is to draw the Fig. below in detail and find f_{Hps} graphically. However, observe that $35 = y = 20\log|A'_V| = 60 - 20\log(f'_{Hps}/10)$ (with f_{Hps} in kHz). Thus

$20\log(f'_{Hps}/10) = 25$ and $f'_{Hps} \approx \underline{178\ kHz}$; the phase here is -90°, hence phase margin = 180-90= $\underline{90°}$.

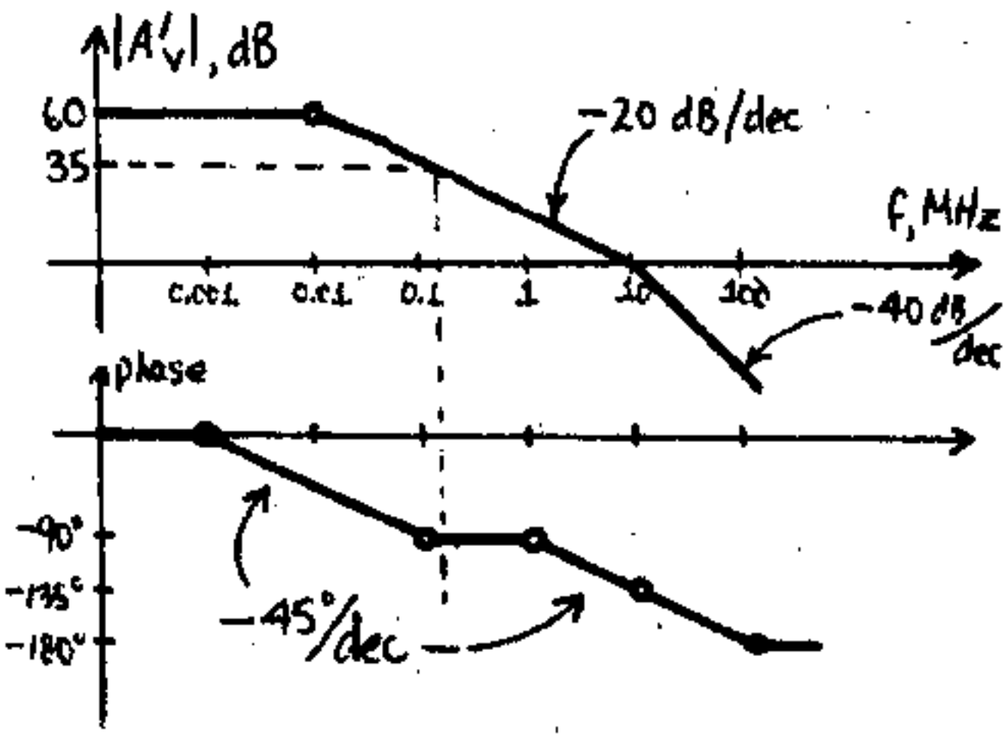

(d) For a voltage follower we want a loop gain of 60 dB (to have 0 dB or unity gain at low frequencies). Drawing the 0 dB horizontal we see that it meets the magnitude of $|A'_V|$ at f = 10 MHz where the phase is -135°. Hence phase margin= 180-135=$\underline{45°}$

15-41 (a) The gain A'_V without feedback but taking the loading of R' into account is obtained from the

Figure below (obtained from the rules of Cha. 12 for a voltage-shunt feedback amplifier)

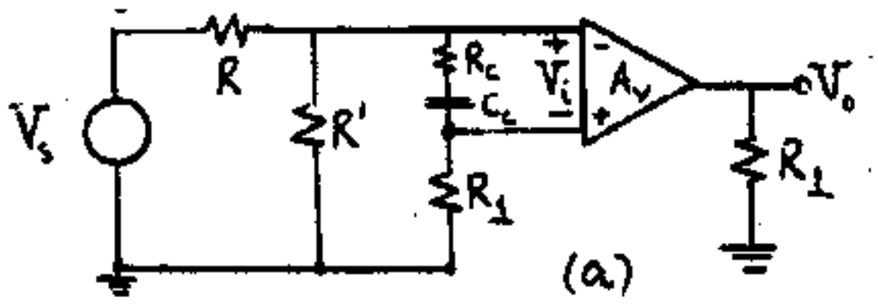

Using Thevenin's theorem we obtain the circuit of Fig. b.

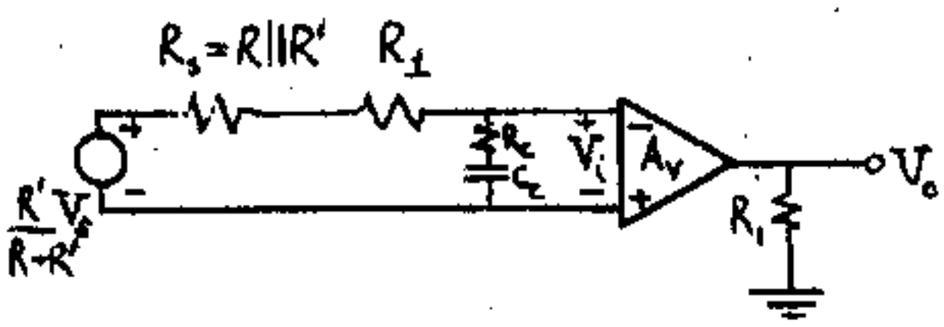

If we assume $R_o \ll R_1$, $V_o = A_V V_i$ and $A_{V'} = \frac{V_o}{V_s} = \frac{V_o}{V_i}\frac{V_i}{V_s} = A_V \frac{V_i}{V_s}$

$$\frac{V_i}{V_s} = \frac{\left(\frac{R'}{R+R'}\right)\left(R_c + \frac{1}{j\omega C_c}\right)}{R_s + R_1 + R_c + \frac{1}{j\omega C_c}}$$

$$A'_V = \frac{A_V R'}{R+R'} \frac{(1+j\omega C_c R_c)}{1+j\omega C_c(R_s+R_1+R_c)} \qquad \text{Q. E. D.}$$

(b) The pole is $f_p = \frac{1}{2\pi C_c(R_s+R_1+R_c)}$

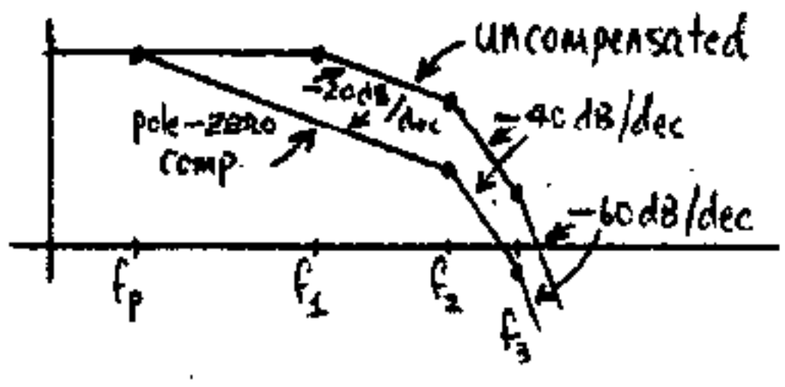

15-42 (a) Since the zero of the compensating network cancels the first pole, we have, from Eq (15-59)

$f_z = 1 \times 10^6$ Hz $= \frac{1}{2\pi R_c C_c}$, hence $C_c R_c = 1.59 \times 10^{-7}$ (1)

The gain curve of the compensated circuit remains at its low-frequency value from 0 Hz to f_p Hz and then it falls at a rate of -20 dB/dec (-6 dB/oct) until the next pole which occurs at 4 MHz (the pole at 1 MHz was cancelled by the zero f_z.

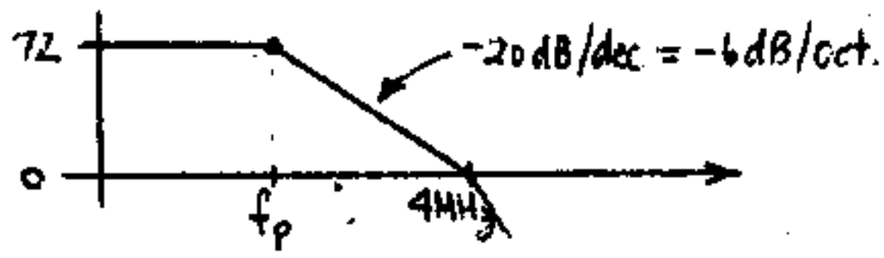

Hence, f_p is (72-0)/20=3.6 decades or (72-0)/6= 12 octaves below 4 MHz and hence

$f_p = 2^{-12} \times 4$ MHz = 976.6 Hz.

From Eq (15-59)

$f_p = 1/2\pi C_c(R_c + R\|R' + R_1) = 976.6$, hence

$C_c(R_c + \frac{RR'}{R+R'} + R_1) = 1.63 \times 10^{-4}$, and using Eq. (1)

$C_c(R_1 + \frac{RR'}{R+R'}) = 1.63 \times 10^{-4} - 1.59 \times 10^{-7} = 1.628 \times 10^{-4}$

Thus $C_c = 1.628 \times 10^{-4} / (R_1 + \frac{RR'}{R+R'})$

and from Eq. (1) $R_c = \frac{1.59 \times 10^{-7}}{C_c} = 9.77 \times 10^{-4}(R_1 + \frac{RR'}{R+R'})$

(b) Under these conditions $R_1 = \frac{R+R'}{R+R'} \approx R = 1\ k\Omega$ and

$R_c = 9.77 \times 10^{-4}(1+1)k\Omega = \underline{1.95\ \Omega}$ and from Eq. (1)

$C_c = 1.59 \times 10^{-7}/R_c = 8.15 \times 10^{-8}$ F $= \underline{81.5\ nF}$

The bandwidth is approximately f_p (which is clearly a dominant pole, since the next pole occurs at 4 MHz) Thus, from (2), bandwidth $= f_p = 976.6$

15-43 (a) Derivation of Eq (15-63): From Fig. 15-35b

$$V_2 = g_{md} V_i \times \frac{R_L / j\omega(C_L + C_M)}{R_L + 1/j\omega(C_L + C_M)}$$

Thus $\frac{V_2}{V_1} = A'_{V1} = \frac{g_{md} R_L}{1 + j\omega R_L(C_L + C_M)}$

(b) Derivation of Eq (15-64): From Eq (15-62):

$A_{V2} = \frac{A_{Vo2}}{1 + jf/f_2}$ and $C_M = (1 - A_{V2})C_f = (1 - \frac{A_{Vo2}}{1+jf/f_2})C_f = \frac{(1 + jf/f_2 - A_{Vo2})C_f}{1 + jf/f_2}$

Thus $C_L + C_M = \frac{(1 + jf/f_2 - A_{Vo2})C_f + (1 + jf/f_2)C_L}{1 + jf/f_2}$

$$= \frac{C_f - A_{Vo2}C_f + j(f/f_2)C_f + C_L + j(f/f_2)C_L}{1 + jf/f_2}$$

$$= \frac{(C_f - A_{Vo2}C_f + C_L) \times \left(1 + \frac{jf/f_2(C_f + C_L)}{C_f - A_{Vo2}C_f + C_L}\right)}{1 + jf/f_2}$$

Let $C_o = C_f - A_{Vo2}C_f + C_L$. Then

$$C_L + C_M = \frac{C_o\left[1 + \frac{jf/f_2(C_f + C_L)}{C_o}\right]}{1 + jf/f_2}$$ and, since

we assume $A_{Vo2}C_f \gg C_L + C_f$ (1)

$C_o = C_f - A_{Vo2}C_f + C_L \approx -A_{Vo2}C_f$

$$C_L+C_M \approx \frac{-A_{Vo2}C_f\left(1-j\,f/f_2\,\frac{C_f+C_L}{A_{Vo2}C_f}\right)}{1+jf/f_2}$$

and from (1) we obtain

$$C_L+C_M \approx \frac{-A_{Vo2}C_f}{1+j\,f/f_2}$$

(c) Derivation of Eq. (15-65): Replacing C_L+C_M by its value in Eq. (15-63)

$$A'_{V1}=\frac{g_{md}R_L}{1+j\omega R_L\frac{-A_{Vo2}C_f}{1+j\,f/f_2}}=\frac{g_{md}R_L(1+j\,f/f_2)}{1+j\,f/f_2-j\omega R_L A_{Vo2}C_f}$$

$$=\frac{g_{md}R_L(1+j\,f/f_2)}{1+j\,f/f_2+\frac{jf}{\frac{-1}{2\pi R_L A_{Vo2}C_f}}}$$

Let $f_{1C}=-1/2\pi R_L A_{Vo2}C_f$ and with a good choice of C_f: $f_{1C} \ll f_2$ we have $A'_{V1}=\frac{g_{md}R_L(1+j\,f/f_2)}{1+j\,f/f_{1C}}$

(d) Derivation of Eq. (15-46): Overall voltage gain

$$A_V=A_{V2}\,A'_{V1}=\frac{A_{Vo2}}{1+j\,f/f_2}\times\frac{g_{md}R_L(1+j\,f/f_2)}{1+j\,f/f_{1C}}$$

$$=\frac{A_{Vo2}g_{md}R_L}{1+j\,f/f_{1C}}$$

15-44 (a) Applying the rules of Cha. 12 we obtain the circuit of Fig. (a) from the voltage-shunt feedback amplifier at Fig. 15-36, where

$$Z'=\frac{R'/j\omega C'}{R'+1/j\omega C'}=\frac{R'}{1+j\omega R'C'} \qquad (1)$$

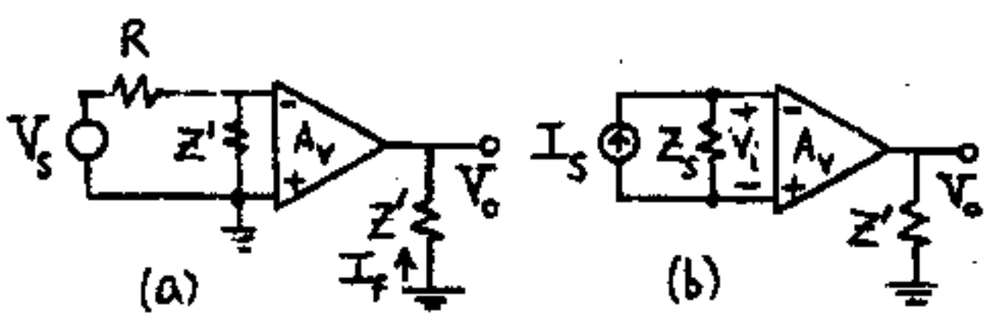

Since the transresistance is stabilized, we draw the Norton equivalent of the input circuit, as shown in Fig. (b), where

$I_s=V_s/R$ and $Z_s=R\|Z'=RZ'/(R+Z')$

From Fig. (a) $\beta=I_f/V_o=-1/Z'$

From Fig. (b)

$$R_M=\frac{V_o}{I_s}=\frac{V_o}{V_i}\,\frac{V_i}{I_s}=A_VZ_s$$

Thus $\beta R_M=-\frac{A_VZ_s}{Z'}=-\frac{A_V}{Z'}\frac{RZ'}{(R+Z')}=-\frac{A_VR}{R+Z'}$ Q.E.D.

(b) Substituting for Z' from Eq. (1) in the equation above

$$\beta R_M=-\frac{A_VR}{R+R'/(1+j\omega R'C')}=\frac{-RA_V(1+j\omega R'C')}{(R+R')+j\omega RR'C'}=$$

$$\frac{-RA_V}{R+R'}\,\frac{1+j2\pi fR'C'}{1+j2\pi f\frac{RR'}{R+R'}C'} \qquad (2).$$ If we let

$$f_z=\frac{1}{2\pi C'R'} \quad\text{and}\quad f_p=\frac{R+R'}{2\pi RR'C'}=\frac{R+R'}{R}f_z,$$

Eq. (2) can be written as

$$\beta R_M=\frac{-RA_V}{R+R'}\,\frac{1+j(f/f_z)}{1+j(f/f_p)}=\frac{-RA_V}{R+R'}A, \qquad \text{Q.E.D.}$$

15-45 The circuit is shown in Fig. (a) below, where

$$Z=\frac{R}{1+j\omega RC}$$

The circuit with the loading of the feedback network is shown in Fig. (b), and the Norton equivalent circuit of Fig. (b) is indicated in Fig. (c) (the Norton equivalent is needed because the transresistance $R_M=V_o/I_s$ is stabilized in this arrangement), where

$$I_s=V_s/Z \quad\text{and}\quad Z_s=ZR'/(Z+R') \qquad (1)$$

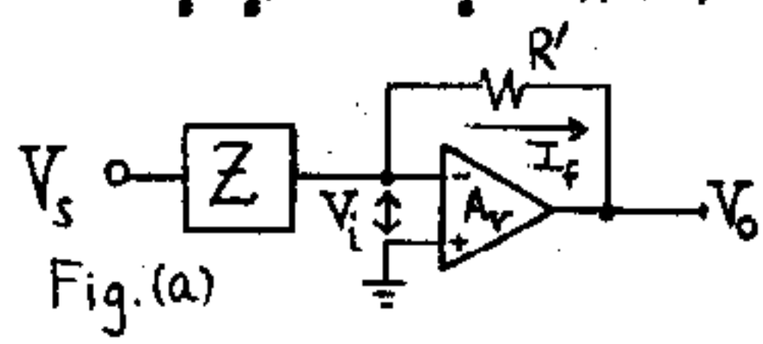

Fig. (a)

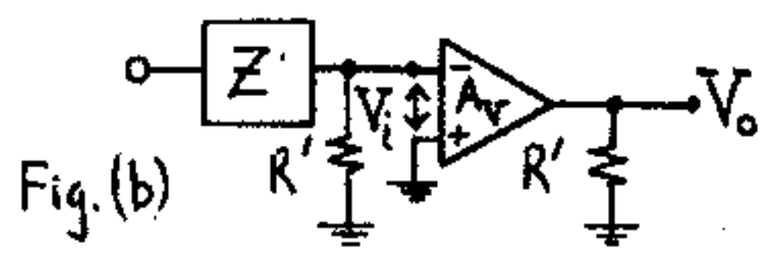

Fig. (b)

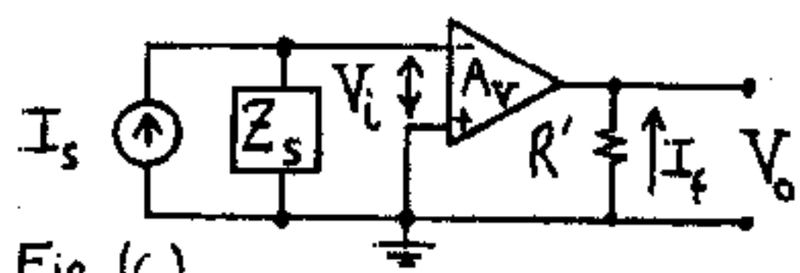

Fig. (c)

From Fig. (c) $\beta=-I_f/V_o=-1/R'$ (2) and

$$R_M=\frac{V_o}{I_s}=\frac{V_o}{V_i}\,\frac{V_i}{I_s}=A_VZ_s \qquad (3).$$ From (1), (2), and (3)

$$\beta R_M=-A_V\frac{Z}{Z+R'}=-A_V\frac{R/(1+j\omega RC)}{R'+R/(1+j\omega RC)}=$$

$$\frac{-A_VR}{(R+R')+j\omega CRR'}=-\frac{RA_V}{R+R'}\,\frac{1}{1+j\,f/f_p}$$

with $f_p = \dfrac{1}{2\pi C \dfrac{RR'}{R+R'}}$

Hence we have lag compensation.

15-46 The voltage-shunt circuit without feedback, but taking the loading of R' into account is shown in Fig. (a)

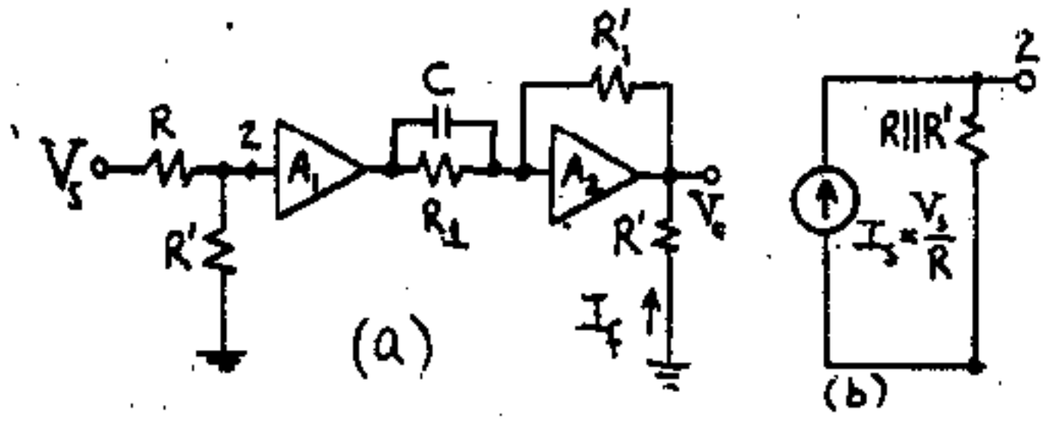

$$\beta = \frac{I_f}{V_o} = -\frac{1}{R'}$$

Using a Norton's input circuit gives Fig. (b). Thus

$$R_M = \frac{V_o}{I_s} = \frac{V_o}{V_s} R$$

$$V_o = \frac{V_s R'}{R+R'} A_1 \left(-\frac{R_1'}{Z_1}\right)$$ where Z_1 is R_1 in parallel with $\frac{1}{j\omega C}$

$$\text{or} \quad Z_1 = \frac{R_1 \frac{1}{j\omega C}}{R_1 + \frac{1}{j\omega C}} = \frac{R_1}{1+j\omega C R_1}$$

$$R_M = \frac{V_o R}{V_s} = \frac{RR'A_1}{R+R'}\left(\frac{-R_1'}{R_1}\right)(1+j\omega C R_1)$$

$$\beta R_M = \left(\frac{RA_1}{R+R'}\right)\left(\frac{R_1'}{R_1}\right)(1+j\omega C R_1)$$

This represents lead compensation.

CHAPTER 16

16-1 (a) $$A_{Vf} = \frac{V_o}{V_s} = \frac{-Z'}{R_1} = -\frac{R_2 + \dfrac{R_3/sC}{R_3+1/sC}}{R_1} =$$

$$-\frac{R_2+R_3/(1+sCR_3)}{R_1} = -\frac{(R_2+R_3)+sCR_2R_3}{R_1(1+sCR_3)} \qquad (1)$$

(b) <u>Using Laplace transform:</u>

From (1) $R_1(1+sCR_3)V_o + [(R_2+R_3)+sCR_2R_3]V_s = 0.$

Passing in the time domain $[s \to d/dt]$

$$R_1\left(1+CR_3\frac{d}{dt}\right)v_o(t) + \left[(R_2+R_3)+CR_2R_3\frac{d}{dt}\right]v_s(t) = 0$$

Since $v_s(t) = V$, $d/dt(v_s) = 0$ and

$$CR_1R_3\, dv_o/dt + R_1 v_o + (R_2+R_3)V = 0$$

$$C\frac{dv_o}{dt} + \frac{1}{R_3}v_o + \frac{1}{R_1}\left(\frac{R_2+R_3}{R_3}\right)V = 0 \qquad \text{Q.E.D.}$$

<u>Using OP AMP concepts</u>

(b) Because of the virtual ground $i_1 = V/R_1$. Hence

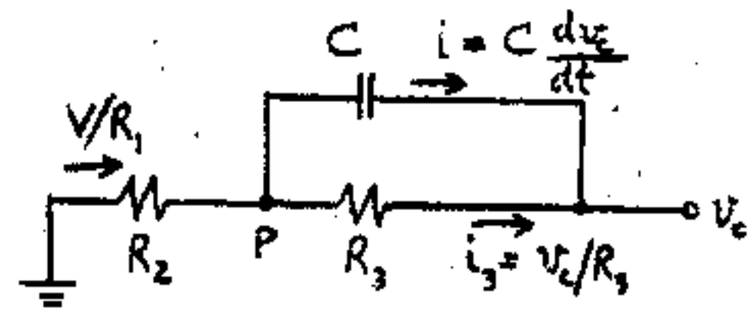

$v_p = -\dfrac{VR_2}{R_1}$ KCL at node P is

$$-\frac{V}{R_1} + C\frac{dv_c}{dt} + \frac{v_c}{R_3} = 0 \quad \text{where } v_c = v_p - v_o = -\frac{VR_2}{R_1} - v_o$$

$$-\frac{V}{R_1} + C\frac{d}{dt}\left(-\frac{VR_2}{R_1} - v_o\right) - \frac{1}{R_3}\left(\frac{VR_2}{R_1} + v_o\right) = 0$$

$$+\frac{V}{R_1} + C\frac{dv_o}{dt} + \frac{VR_2}{R_3R_1} + \frac{v_o}{R_3} = 0$$

$$C\frac{dv_o}{dt} + \frac{v_o}{R_3} + \frac{V}{R_1}\left(1+\frac{R_2}{R_3}\right) = 0 \qquad \text{Q.E.D.}$$

16-2

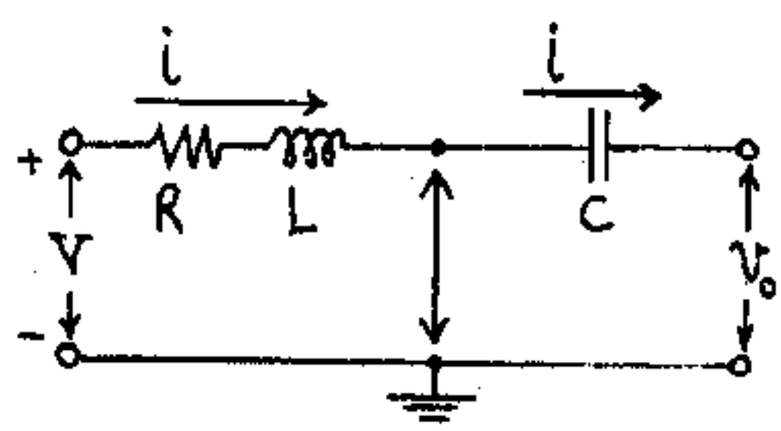

Because of the virtual ground, V is impressed across R and L in series. Thus, $V = L\frac{di}{dt} + iR$. If $i = 0$ at $t = 0$, then $i = \frac{V}{R}(1-e^{-Rt/L})$. Since v_o is the voltage across C, then

$$v_o = -\frac{1}{C}\int_0^t i\,dt = -\frac{V}{RC}\int_0^t (1-e^{-Rt/L})dt = -\frac{V}{RC}\left[t + \frac{L}{R}(e^{-Rt/L}-1)\right]$$

16-3 Because of the virtual ground, v is impressed across R and C in parallel. Thus, $i = \frac{v}{R} + C\frac{dv}{dt}$.

If $v = \alpha t$, then $i = \frac{\alpha t}{R} + \alpha C$. Hence,

$v_o = -iR' = -\alpha R'C - \alpha \frac{R'}{R} t$

16-4 (a) $A_{Vf} = -Z'/Z$ where

$Z = R_1 + 1/sC_1 = (1+sR_1C_1)/sC_1$ and

$Z' = \frac{R_2/sC_2}{R_2+1/sC_2} = \frac{R_2}{1+sR_2C_2}$. Thus

$$A_{Vf} = -\frac{Z'}{Z} = -\frac{sR_2C_1}{(1+sR_2C_2)(1+sR_1C_1)}$$

(b) This configuration is in the form of Fig. 15-4a, where the voltage applied to the positive terminal is

$$V_p = \frac{R_1}{R_1+1/sC_1} V_s = \frac{sC_1R_1}{1+sR_1C_1} V_s \qquad (1)$$

From Eq. (16-3) $A_{Vf} = \frac{V_o}{V_p} = \frac{Z+Z'}{Z}$ (2)

where $Z = 1/sC_2$ and $Z' = R_2$. Thus, from (1) and (2),

$$T(s) = \frac{V_o}{V_s} = \frac{V_o}{V_p}\cdot\frac{V_p}{V_s} = \frac{R_2+1/sC_2}{1+sC_2}\,\frac{sC_1R_1}{1+sR_1C_1} = \frac{sC_1R_1(1+sC_2R_2)}{(1+sR_1C_1)}$$

16-5 Use superposition. The negative sum is obtained by letting $v_3 = v_4 = 0$. Thus, from Eq. (16-2a)

$$v_o' = -\frac{50}{40}v_1 - \frac{50}{25}v_2 = -1.25\,v_1 - 2.0\,v_2 \qquad (1)$$

To find the contribution v_o'' of v_3 and v_4 we let $v_1\ v_2 = 0$. The voltage v_+ at the positive terminal due to v_3 and v_4 is found by superposition using Figs. (a) and (b) below

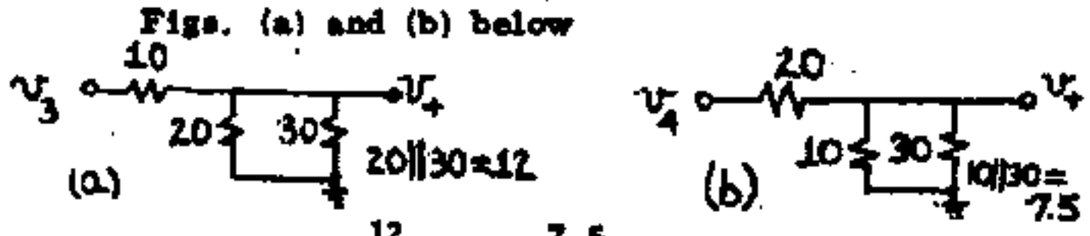

Thus $v_+ = \frac{12}{10+12}v_3 + \frac{7.5}{20+7.5}v_4 = 0.545\,v_3 + 0.273\,v_4$

and from Eq. (16-3) $v_o'' = \frac{R+R'}{R}v_+$ where

$R' = 50$ and $R = (40\times25)/(40+25) = 15.38$. Thus

$v_o'' = \frac{50+15.38}{15.38}(0.545v_3 + 0.273\,v_4) = 2.32\,v_3 + 1.16\,v_4$

Finally, $v_o = v_o' + v_o'' = -1.25\,v_1 - 2.0\,v_2 + 2.32\,v_3 + 1.16\,v_4$

16-6 Use superposition on v_s and v_o to find the voltage v at the negative terminal of the OP AMP. Since the input resistance is infinite,

$$v = \frac{R'}{R_1+R'}v_s + \frac{R_1}{R_1+R'}v_o = \frac{R'v_s + R_1v_o}{R_1+R'} \qquad (1)$$

Denoting by i_3 the current in R_3 (in the direction away from v_o) we apply KCL at the positive terminal of the OP AMP (whose voltage is v, due to the virtual short circuit)

$i_L = -\frac{v}{R_2} + \frac{v_o - v}{R_3} = \frac{v_o}{R_3} - \frac{R_3+R_2}{R_3R_2}v$, and from Eq. (1)

$$i_L = \frac{v_o}{R_3} - \frac{R_3+R_2}{R_3R_2}\left(\frac{R'}{R_1+R'}v_s + \frac{R_1}{R_1+R'}v_o\right) =$$

$$\left[\frac{1}{R_3} - \frac{R_1(R_3+R_2)}{R_2R_3(R_1+R')}\right]v_o - \left[\frac{R'(R_3+R_2)}{R_2R_3(R_1+R')}\right]v_s \qquad (2)$$

Since we want i_L independent of v_o,

$$\frac{1}{R_3} - \frac{R_1(R_3+R_2)}{R_2R_3(R_1+R')} = 0 \quad \text{or} \quad R_2(R_1+R') = R_1(R_3+R_2).$$

Multiplying out, $R_2R' = R_1R_3$ or $R_3/R_2 = R'/R_1$

Q.E.D.

Under the above constraint the coefficient of v_o in Eq. (2) becomes zero, and

$$i_L = -\left[\frac{R'(R_3+R_2)}{R_2R_3(R_1+R')}\right]v_s = -\left(\frac{R_3+R_2}{R_3}\right)\left(\frac{R'}{R_1+R'}\right)\left(\frac{v_s}{R_2}\right)$$

Now $(R_3+R_2)/R_3 = 1+(R_2/R_3)$ and

$(R_1+R')/R' = 1+(R_1/R') = 1+(R_2/R_3)$. Hence

$i_L = -v_s/R_2$

16-7

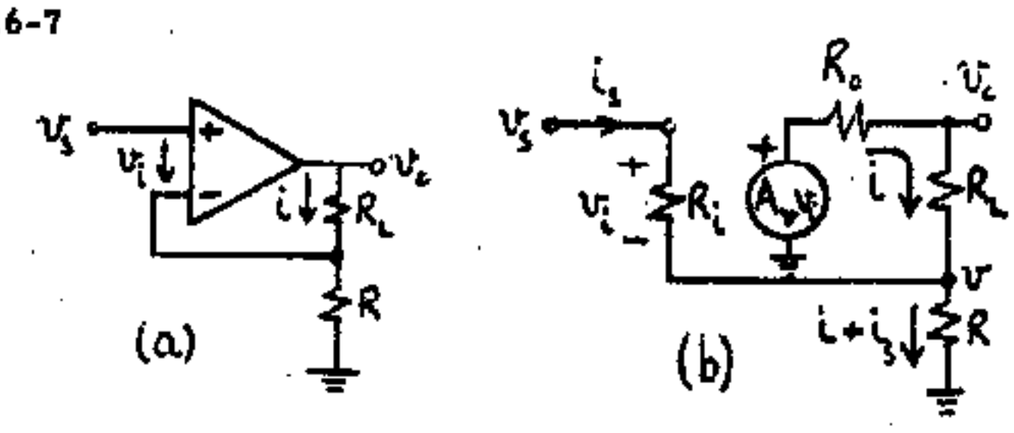

(a) $v_o = A_v v_i = A_v\left(v_s - \frac{R}{R+R_L}v_o\right)$. Solving for v_o,

$\left(\frac{A_vR+R+R_L}{R+R_L}\right)v_o = A_vv_s$ and $v_o = \frac{A_v(R+R_L)}{(A_v+1)R+R_L}v_s$.

$$G_M = \frac{i}{v_s} = \frac{1}{v_o}\,\frac{v_o}{v_s} = \left(\frac{1}{R_L+R}\right)\frac{A_v(R+R_L)}{(A_v+1)R+R_L} = \frac{A_v}{(A_v+1)R+R_L}$$

Note that if $A_v = \infty$, $G_M = 1/R$

(b) The equivalent circuit is shown in Fig. (b)

$R_{in} = \frac{v_s}{i_s}$. Noting that $v_i = R_ii_s$, we write KVL for the two loops:

$$(R+R_i)i_s + Ri = v_s \qquad (1)$$

$$R\,i_s + (R+R_o+R_L)i = A_vR_ii_s \quad \text{or}$$

$$(R-A_vR_i)i_s + (R+R_o+R_L)i = 0 \qquad (2)$$

Solving by Crammer's rule for i_s

$$i_s = \frac{R+R_o+R_L}{(R+R_1)(R+R_o+R_L)-(R-A_vR_1)R} v_s. \quad \text{Thus } R_{in} =$$

$$\frac{v_s}{i_s} = \frac{R_1(R+R_o+R_L)+R(R_o+R_L+A_vR_1)}{R+R_o+R_L} =$$

$$R_1 + \frac{R(R_o+R_L+A_vR_1)}{R+R_o+R_L}$$

16-8

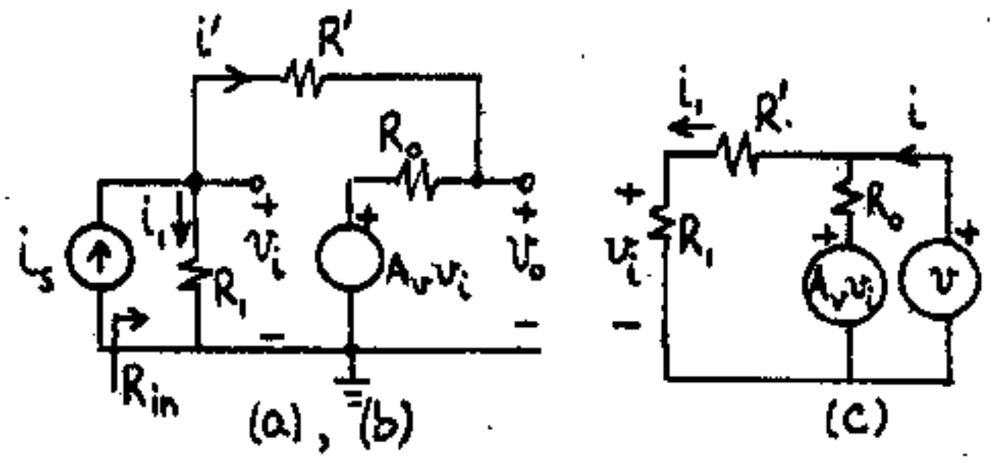

(a) $R_o \ll R'$: Then $v_o = A_v v_i$

$$i_s = i_1 + i' = \frac{v_i}{R_1} + \frac{v_i - A_v v_i}{R'} = \frac{R' + (1-A_v)R_1}{R_1 R'} v_i \qquad (1)$$

Thus $R_M = \frac{v_o}{i_s} = \frac{v_o}{v_i}\frac{v_i}{i_s} = A_v \frac{R_1 R'}{R' + (1-A_v)R_1}$

Notice that if $A_v \gg 1$,

$$R_M = \frac{A_v R_1 R'}{R' - A_v R_1} = \frac{-R'}{1 - R'/A_v R_1}$$

(b) $R_{in} = \frac{v_i}{i_s} = \frac{R_1 R'}{R' + (1-A_v)R_1}$ from Eq. (1)

Alternatively, we can find R_{in} using

$$R_{in} = \frac{v_i}{i_s} = \frac{v_i}{v_o}\frac{v_o}{i_s} = \left(\frac{1}{A_v}\right) R_M$$

(c) Refer to Fig. (c). Writing the KVL equations for the two meshes defined by i and i_1

$$(R_1 + R' + R_o) i_1 - R_o i = A_v v_i$$

$$-R_o i_1 + R_o i = v - A_v v_i$$

Noting that $v_i = R_1 i_1$, we rewrite the above Eq's

$$(R_1 - A_v R_1 + R' + R_o) i_1 - R_o i = 0 \qquad (2)$$

$$(A_v R_1 - R_o) i_1 + R_o i = v \qquad (3)$$

Solving for i by Cramer's rule

$$i = \frac{R_1 - A_v R_1 + R' + R_o}{(R_1 - A_v R_1 + R' + R_o)R_o + (A_v R_1 - R_o)R_o} v =$$

$$\frac{R_1 - A_v R_1 + R' + R_o}{R_o(R_1 + R')} v$$

Thus $R_{out} = \frac{v}{i} = \frac{R_o(R_1 + R')}{R_o + R' + (1-A_v)R_1}$

For $A_v \gg (R_o + R')/R_1$, $R_{out} \approx \frac{-R_o}{A_v}\frac{R' + R_1}{R_1}$

and for $R_1 \gg R'$ $R_{out} \approx \frac{-R_o}{A_v}$

16-9 Due to the infinite input resistance, the current in R_f is equal to I_1 and, due to the virtual ground, $V_o = -R_f I_1$. Let I be the current through R. From the circuit configuration $V_o = RI$. Thus $-R_f I_1 = RI$ and $I = -R_f I_1/R$

Finally $I_o = I_1 - I = (1 + R_f/R) I_1$

16-10

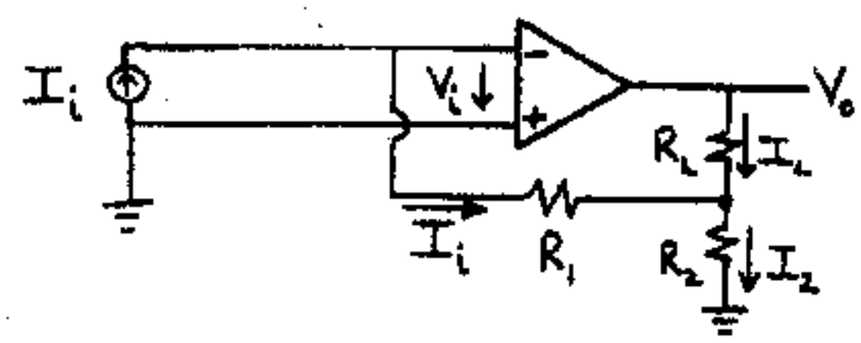

(a) (1) Since there is no current in the OP AMP, I_1 enters R_1.

(2) Due to the virtual short circuit at the input of the OP AMP, R_1 is effectively grounded and I_L flows through the parallel combination of R_1 and R_2. Hence

$$I_1 = -\frac{R_2}{R_1 + R_2} I_L \quad \text{and} \quad I_L = -\left(1 + \frac{R_1}{R_2}\right) I_1$$

(b) Now $v_i = R_1 I_1 + R_2 I_2$ Thus $I_L = (V_o - R_2 I_2)/R_L =$

$$\frac{A_V V_i - R_2 I_2}{R_L} = \frac{A_V(R_1 I_1 + R_2 I_2) - R_2 I_2}{R_L}$$

$$= \frac{A_V R_1 I_1 + A_V R_2 (I_1 + I_L)}{R_L}$$

In the last step of above equation the term $R_2 I_2$ was neglected as compared to $A_V R_2 I_2$ (since $A_V \gg 1$) and I_2 was substituted by $I_1 + I_L$. Solving for the ratio I_L/I_1 we obtain

$$\frac{I_L}{I_1} = \frac{A_V(R_1 + R_2)}{R_L - A_V R_2} = \frac{-(R_1 + R_2)/R_2}{1 - R_L/A_V R_2} \qquad \text{Q.E.D.}$$

16-11 Let I_1, I_2, and I_3 be the currents in R_1, R_2, R_3, respectively, from left to right, and let I_4 be the current in R_4 toward the ground. Let V be the voltage at point P, the common node of R_2, R_3, and R_4.

(1) Due to the infinite input resistance of the OP AMP $I_1 = I_2 = I$.

(2) Due to the virtual ground $V_s = R_1 I$; for the same reason, $V = -R_2 I = -R_2 V_s/R_1$.

Thus $I_4 = V/R_4 = -R_2 V_s/R_1 R_4$. Finally,

$V_o = -R_3 I_3 + V = -R_3(I - I_4) + V =$

$$-R_3\left(\frac{V_s}{R_1} + \frac{R_2 V_s}{R_1 R_4}\right) - \frac{R_2 V_s}{R_1} = -\frac{R_2 + R_3 + R_2 R_3/R_4}{R_1} V_s$$

16-12 (1) For S closed, the noninverting terminal is grounded and we have a standard inverting OP AMP with $R'=R$. Hence $v_o=-R'v_i/R=-v_i$

(2) For S open we have inputs both at the inverting and the noninverting terminal. Using superposition and Eqs. (16-1) and (16-3),

$$v_o=-\frac{R'}{R}v_i+(1+\frac{R'}{R})v_i=-v_i+(1+1)v_i=v_i$$

since $R'=R$.

16-13 (a) Due to the infinite input resistance of the OP AMP, the voltage V_p at its positive terminal is

$$V_p=\frac{1/j\omega C}{R+1/j\omega C}V_i=\frac{1}{1+j\omega RC}V_i$$

Using superposition (for the contributions of the voltages at the inverting and noninverting terminals) and Eqs. (16-1) and (16-3) we have

$$V_o=-\frac{R'}{R'}V_i+(1+\frac{R'}{R'})V_p=-V_i+\frac{2}{1+j\omega RC}V_i=\frac{1-j\omega RC}{1+j\omega RC}V_i \quad (1)$$

$$|A|=\sqrt{\frac{(1+\omega^2R^2C^2)}{(1+\omega^2R^2C^2)}}=1 \quad \text{for all } \omega \text{ and } R$$

From (1), $\phi=\arctan(-\omega RC)-\arctan(\omega RC)=$
$-2\arctan(\omega RC)$

Hence, as R varies from 0 (short) to ∞ (open-circuit), ϕ varies from 0° to -180°.

(b) In this case $V_p=\frac{R}{R+1/j\omega C}V_i=\frac{j\omega RC}{1+j\omega RC}V_i$, and

$$V_o=-V_i+2V_p=-V_i+\frac{2j\omega RCV_i}{1+j\omega RC}=\frac{-1+j\omega RC}{1+j\omega RC}V_i=-\frac{1-j\omega RC}{1+j\omega RC}V_i$$

Again, $|V_o/V_i|=1$, independent of ω and R, but

$\phi=180^\circ+\arctan(-\omega RC)-\arctan(\omega RC)=$
$180^\circ-2\arctan(\omega RC)$

Thus $\phi=180^\circ$ when $R=0$ (indeed, $A=-1$), and $\phi=0^\circ$ when $R=\infty$ (indeed, $A=1$).

16-14 Since the OP AMP has infinite input resistance, we have the same currents in R_1 and R_2 both in the upper and the lower parts of the circuit. Denoting by V_n and V_p the voltages at the negative and positive terminals of the OP AMP, respectively, we have using superposition

$$V_n=\frac{R_1}{R_1+R_2}V_4+\frac{R_2}{R_1+R_2}V_2$$

$$V_p=\frac{R_1}{R_1+R_2}V_3+\frac{R_2}{R_1+R_2}V_1$$

Noting that $V_p=V_n$ due to the virtual short circuit at the input of the OP AMP, we equate the right-hand sides of the two equations above to obtain

$$\frac{R_1}{R_1+R_2}V_4+\frac{R_2}{R_1+R_2}V_2=\frac{R_1}{R_1+R_2}V_3+\frac{R_2}{R_1+R_2}V_1 \quad \text{or}$$

$$R_1(V_4-V_3)=R_2(V_1-V_2) \text{ and } V_o=V_4-V_3=\frac{R_2}{R_1}(V_1-V_2)$$

16-15

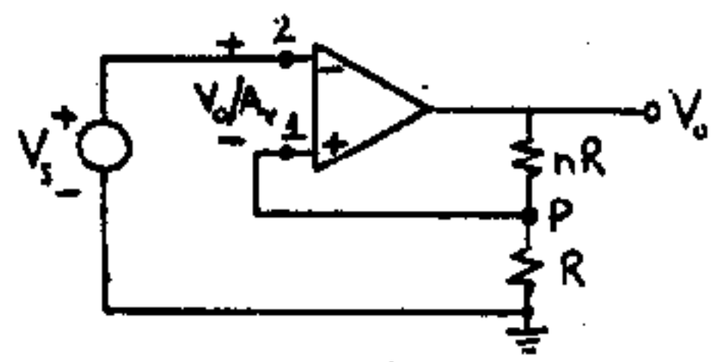

(a) The voltage at node P is $V_s-\frac{V_o}{A_V}$ and hence V_o is n+1 times this voltage, or

$$V_o=(n+1)V_s-(n+1)\frac{V_o}{A_V}$$

$$A_{Vf}=\frac{V_o}{V_s}=\frac{n+1}{1+\frac{n+1}{A_V}}$$

(b) for $A_V=\infty$, $A_{Vf}=n+1$ Q.E.D.

16-16 Since $R_i=\infty$ $V_2=\frac{V}{2}$ and $V_1=\frac{R}{2R+\Delta R}V=\frac{1}{2+\delta}V$

hence

$$V_o=A_d(\frac{1}{2+\delta}-\frac{1}{2})V=A_dV\frac{-\delta}{4+2\delta}=-\frac{A_dV}{4}\times\frac{\delta}{1+\delta/2} \quad \text{Q.E.D.}$$

16-17 The characteristics of an ideal OP AMP used in this solution are: (1) the voltage between input terminals is zero and (2) the input current is zero.

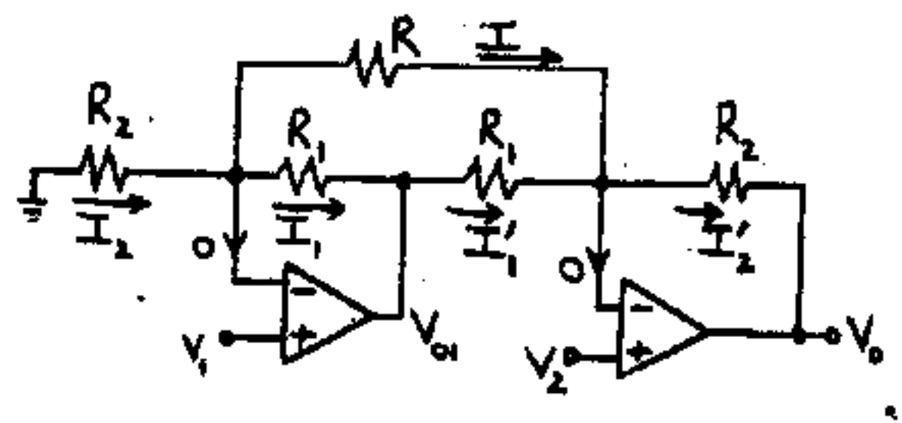

Thus $V_o=-R_2I_2'+V_2=-R_2(I+I_1')+V_2=-R_2(\frac{V_1-V_2}{R}+\frac{V_{o1}-V_2}{R_1})+V_2$

$$=-R_2(\frac{V_1-V_2}{R}+\frac{(-R_1I_1+V_1)-V_2}{R_1})+V_2$$

$$=-\frac{R_2}{R}(V_1-V_2)-\frac{R_2}{R_1}(V_1-V_2)+R_2I_1+V_2$$

$$=(\frac{R_2}{R}+\frac{R_2}{R_1})(V_2-V_1)+R_2(I_2-I)+V_2$$

$$=(\frac{R_2}{R}+\frac{R_2}{R_1})(V_2-V_1)+R_2(\frac{-V_1}{R_2}-\frac{V_1-V_2}{R})+V_2$$

$$=(\frac{R_2}{R}+\frac{R_2}{R_1}+1+\frac{R_2}{R})(V_2-V_1)$$

$$=(\frac{R_2}{R_1}+1+\frac{2R_2}{R})(V_2-V_1) \quad \text{Q.E.D.}$$

16-18

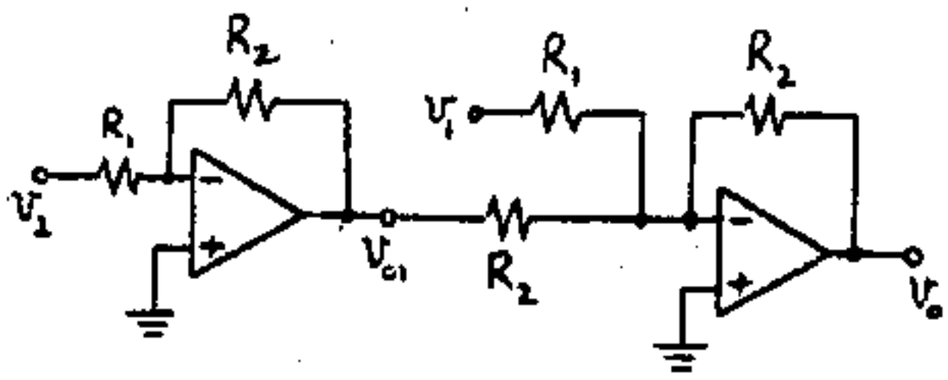

Let $k = R_2/R_1$. Then $v_{o1} = -R_2 v_2/R_1 = -kv_2$

Using superposition on the second stage,

$v_o = -(R_2/R_1)v_1 - (R_2/R_2)v_{o1} = -kv_1 - (-kv_2) = k(v_2 - v_1)$.

16-19 Using superposition and Eqs. (16-1) and (16-3), and noting that the voltage at the positive terminal of A3 is $R_2 V_1'/(R_1+R_2)$, we have

$$V_o = -\frac{R_2}{R_1}V_2' + \left(\frac{R_1+R_2}{R_1}\right)\left(\frac{R_2 V_1'}{R_1+R_2}\right) = \frac{R_2}{R_1}(V_1' - V_2') \qquad (1)$$

Since the voltage at the input of the OP AMP is zero, the current I in R (going upward) is $I = (V_1 - V_2)/R$ and, due to the infinite input resistances of A1 and A2, this same current I passes through the two resistances designated by R'. Thus

$$V_1' = R'I + V_1 = \frac{R'}{R}(V_1 - V_2) + V_1$$

$$V_2' = -R'I + V_2 = -\frac{R'}{R}(V_1 - V_2) + V_2$$

Plugging these expressions in (1) we obtain

$$V_o = \frac{R_2}{R_1}\left(\frac{2R'}{R}(V_1 - V_2) + (V_1 - V_2)\right) = \frac{R_2}{R_1}\left(1 + \frac{2R'}{R}\right)(V_1 - V_2)$$

16-20 (a) The equivalent circuit corresponding to Fig. 16-12(a) is as shown, where Miller's theorem (Sec C) was used

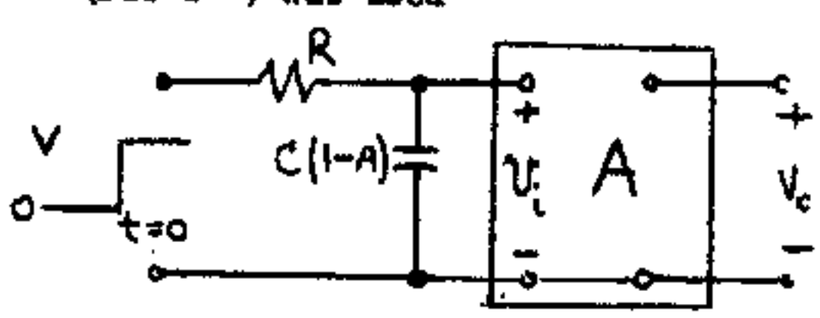

$Z'(s)/(1-A_V) = \dfrac{1}{sC(1-A_V)}$

and thus $Z'/(1-A_V)$ represents a capacitor of value $C(1-A_V)$. Assume that $R_1 = \infty$. Then the time constant of the input circuit is

$\tau = RC(1-A_V)$. Hence, for $t \geq 0$, we have:

$v_i = V(1-e^{-t/\tau})$ since at $t = 0$, $v_i = 0$ and at $t = \infty$, $v_i = V$.

Thus, $v_o = A_V v_i = A_V V[1 - e^{-t/RC(1-A_V)}]$

(b) For the simple RC integrating circuit, $v_o = V(1 - e^{-t/RC})$ which for large RC becomes:

$$v_o = \frac{Vt}{RC}\left(1 - \frac{t}{2RC} + \ldots\right).$$

For the operational integrator of part (a) we have

$$v_o = \frac{A_V Vt}{RC(1-A_V)}\left[1 - \frac{t}{2RC(1-A_V)} + \ldots\right] \approx -\frac{Vt}{RC}\left[1 - \frac{t}{2RC(1-A_V)} + \ldots\right]$$

if $-A_V \gg 1$. Thus, the output voltage of both circuits varies approximately linearly with time, if RC is large, and for either circuit $\frac{dv_o}{dt} = \frac{V}{RC}$. Since the second term in the expressions represents the deviation from linearity, we see that the operational integrator is more linear than the simple RC circuit by a factor of $1/(1-A_V)$.

16-21 Using Eq. (15-2) we obtain

$$A_{Vf} = \frac{-1/R}{sC - \frac{1+s/|s_1|}{A_{Vo}}\left(\frac{1}{R} + sC\right)} = -\frac{1}{R}\frac{A_{Vo}}{sCA_{Vo} - (1+s/|s_1|)\left(\frac{1+sCR}{R}\right)}$$

$$= \frac{-A_{Vo}}{sRCA_V - (1+s/|s_1|)(1+sCR)} = \frac{-A_{Vo}}{sRCA_{Vo} - 1 - sCR - \frac{s}{|s_1|} - s^2\frac{CR}{|s_1|}}$$

$$= \frac{A_{Vo}}{s^2\frac{CR}{|s_1|} + s\left[\frac{1}{|s_1|} + CR(1-A_{Vo})\right] + 1} \qquad (1)$$

and since $|A_{Vo}| \gg 1$ and $|A_{Vo}|RC \gg \frac{1}{|s_1|}$, (1) becomes

$$A_{Vf} = \frac{A_{Vo}}{\frac{RC}{|s_1|}s^2 + |A_{Vo}|RCs + 1} \qquad (2)$$

The roots of the denominator of (2) are

$$s_{1f} = \frac{-|A_{Vo}|RC}{2RC/|s_1|} + \sqrt{\left(\frac{|A_{Vo}|RC}{2RC/|s_1|}\right)^2 - \frac{|s_1|}{RC}} =$$

$$-\frac{1}{2}|A_{Vo}s_1| + \sqrt{\left(\frac{1}{2}|A_{Vo}s_1|\right)^2 - |s_1|/RC} =$$

$$= \frac{-1}{2}|A_{Vo}s_1|\left[1 - \left(1 - \frac{4}{CR|s_1||A_{Vo}|^2}\right)^{\frac{1}{2}}\right] \text{ and}$$

$$s_{2f} = -\frac{1}{2}|A_{Vo}s_1|\left[1 + \left(1 - \frac{4}{CR|s_1||A_{Vo}|^2}\right)^{\frac{1}{2}}\right]$$

We know that $|A_{Vo}|^2 CR|s_1| \gg 1$ hence using the approximation $(1-x)^{\frac{1}{2}} = 1 - \frac{1}{2}x$ for $x \ll 1$ we have

$$s_{1f} = -\frac{1}{2}|A_{Vo}s_1|\left[1 - 1 + \frac{1}{2}\frac{4}{CR|s_1||A_{Vo}|^2}\right] = -\frac{1}{|A_{Vo}|CR} \text{ and}$$

$$s_{2f} = -|A_{Vo}s_1|\left[1 - \frac{1}{CR|s_1||A_{Vo}|^2}\right] =$$

$= -|A_{Vo}||s_1| + \frac{1}{CR|A_{Vo}|} \approx -|A_{Vo}||s_1|$ hence (2)

becomes

$$A_{Vf} = \frac{A_{Vo}|s_1|}{RC\,(s-s_{1f})(s-s_{2f})} = \frac{A_{Vo}|s_1|}{RC} \times$$

$$\frac{1}{\left(s+\frac{1}{|A_{Vo}|CR}\right)(s+|A_{Vo}||s_1|)} = \frac{-A_{Vo}s_1/RC}{\left(s-\frac{1}{RCA_{Vo}}\right)(s+A_{Vo}s_1)}$$

Since both s_1 and A_{Vo} are negative.

16-22

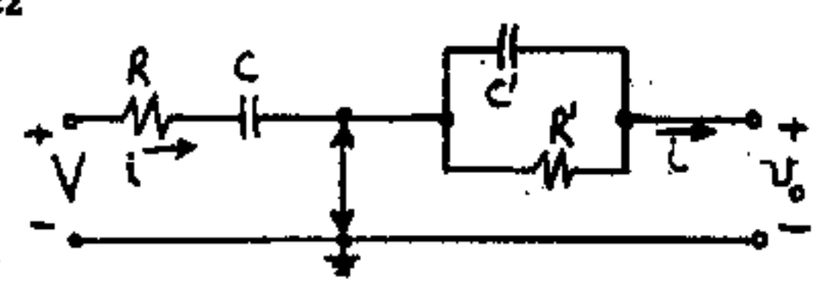

(a) Assume that the capacitors are initially uncharged. Since the voltage across C' cannot change abruptly, then v_o starts at zero. In the steady state there can be no current through C or C'. Hence, i drops to zero, the current through R' becomes zero and v_o falls to zero. Thus, v_o starts at zero, increases to some finite value and then drops to zero.

(b) The step input is applied across the series combination of R and C. The current i(t) starts at V/R (since the capacitor's voltage cannot change abruptly) and it reaches its final value of 0 with a time constant RC. Thus $i(t)=(V/R)\exp(-t/RC)$.

This current divides between C' and R', across which the voltage v_o appears. Thus, from KCL,

$$\frac{v_o}{R'} + C'\frac{dv_o}{dt} = -i = -\frac{V}{R}\exp(-t/RC) \qquad (1)$$

The solution is of the form: $v_o = K_1 e^{-t/RC} + K_2 e^{-t/R'C'}$, but since at $t = 0$, $v_o = 0$, then $K_1 = -K_2$ and $v_o = K_1(e^{-t/RC} - e^{-t/R'C'})$. To find K_1, substitute into the differential equation (1):

Thus, $e^{-t/RC}\left(\frac{K_1}{R'} - \frac{K_1C'}{RC}\right) - e^{-t/R'C'}\left(\frac{K_1}{R} - \frac{K_1C'}{R'C'}\right) = \frac{-V}{R}e^{-t/RC}$

$\frac{K_1}{R'} - \frac{K_1C'}{RC} = -\frac{V}{R}$ or $K_1 = \frac{R'CV}{R'C'-RC}$ provided that $R'C' \neq RC$

$$\therefore\ v_o = \frac{R'CV}{R'C'-RC}\left(e^{-t/RC} - e^{-t/R'C'}\right)$$

16-23

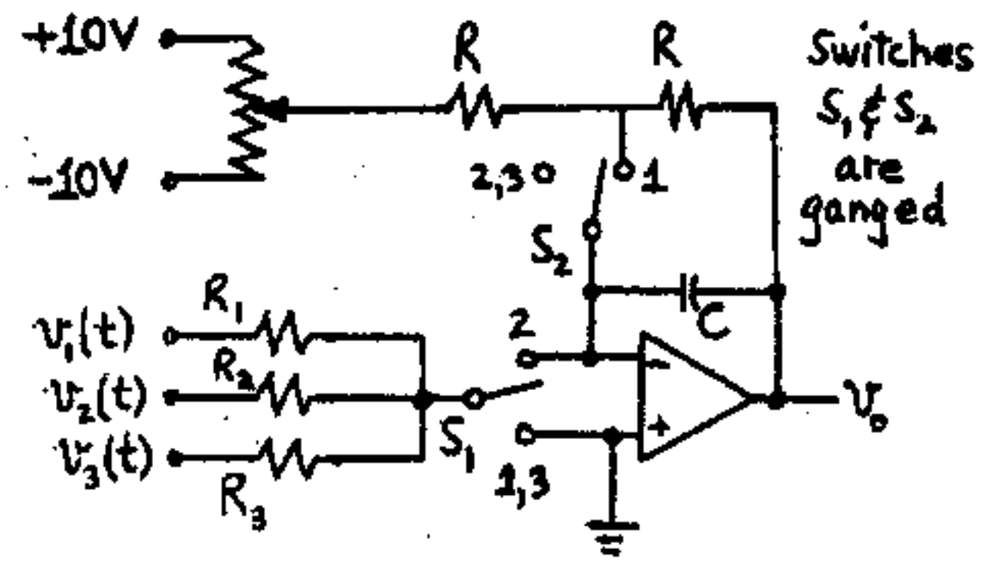

1. Set the voltage across R and hence C to be the negative of $v_o(0)$.
2. Normal integration takes place.
3. v_o reads the result of the integration. It remains constant as long as there is no capacitor leakage and no bias current.

16-24 The voltage at the positive terminal of the OP AMP is

$$V_+ = \frac{1/sC}{R+1/sC}V_s$$

From Eq. (16-3) $V_o = \frac{R+1/sC}{R}V_+ = \frac{1}{RCs}V_s$

Since 1/s means integration, $v_o = \frac{1}{RC}\int v_s\,dt$

16-25

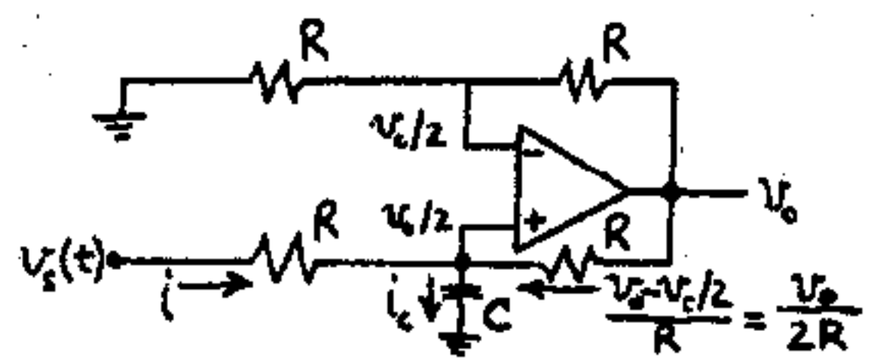

$$i_C = i + \frac{v_o}{2R} = \frac{v_s - v_o/2}{R} + \frac{v_o}{2R} = \frac{v_s}{R}$$

Thus $\frac{v_o}{2} = \frac{1}{C}\int i_C\,dt = \frac{1}{RC}\int v_s\,dt$ and $v_o = \frac{2}{RC}\int v_s\,dt$

16-26 Due to the virtual short circuit of the OP AMP, both its terminals are at ground potential. Thus the input part of the circuit is shown in Fig. a below, where V_s and R were substituted by their Norton equivalent.

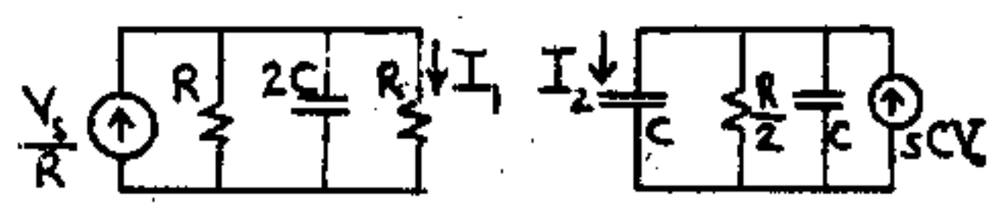

Let Z_1 be the impedance of the parallel combination of R and 2C. Then $Z_1 = \frac{R/s2C}{R+1/s2C} = \frac{R}{1+s2RC}$

and, from the current-divider formula

$$I_1 = \frac{Z_1}{R+Z_1}\frac{V_s}{R} = \frac{R/(1+s2RC)}{R+R/(1+s2RC)}\frac{V_s}{R} = \frac{V_s}{2R(1+sRC)} \qquad (1)$$

Due to the virtual short circuit, the output part of the circuit is shown in Fig. b, where V_o and C were substituted by their Norton equivalent. Let Z_2 be the parallel combination of C and R/2, i.e.

$$Z_2 = \frac{(R/2)(1/sC)}{(R/2)+(1/sC)} = \frac{R}{2+sCR} \quad \text{and}$$

$$I_2 = \frac{Z_2}{Z_2+1/sC} sCV_o = \frac{R/(2+sCR)sCV_o}{R/(2+sCR)+1/sC} = \frac{(sC)^2 V_o}{\frac{2}{R}(1+sCR)} \quad (2)$$

Because of the infinite input resistance of the OP AMP, the current into its negative terminal. Hence $I_1 = -I_2$ and from (1) and (2)

$$V_o = -\frac{1}{(sCR)^2} V_s \qquad \text{Q.E.D.}$$

16-27

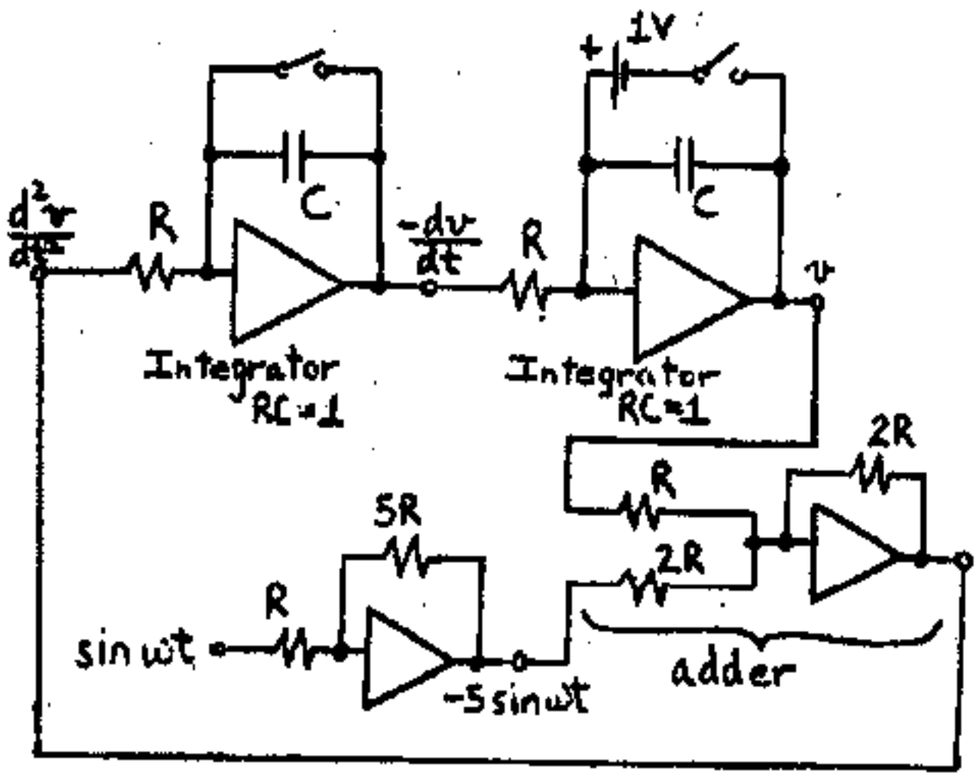

16-28

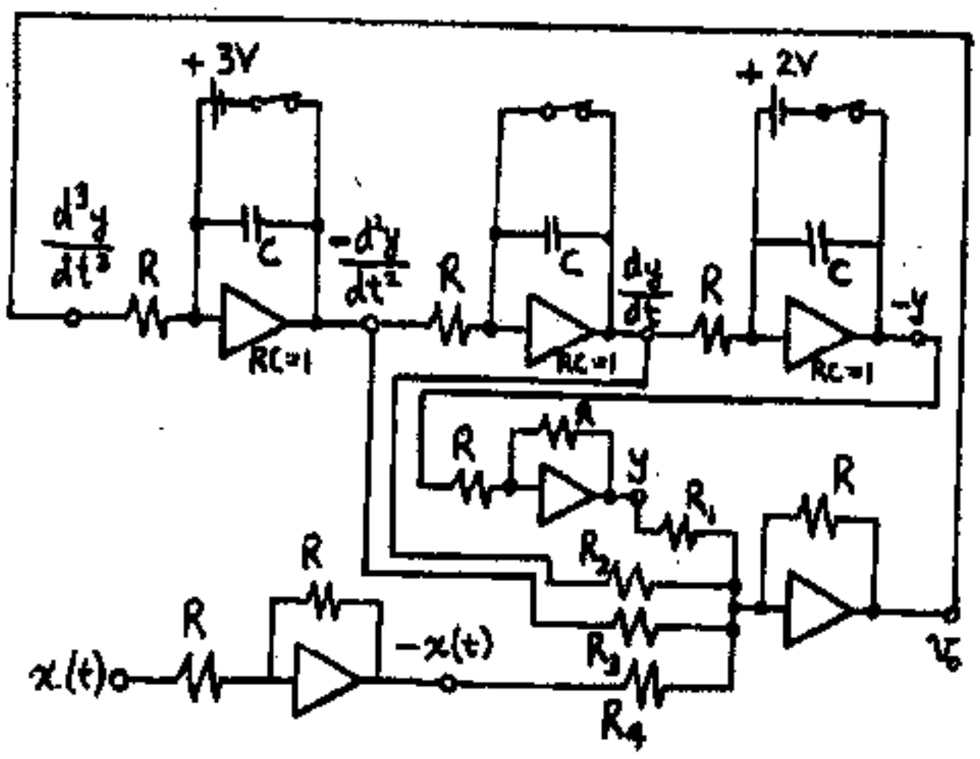

If $R/R_1=3$, $R/R_2=4$, $R/R_3=5$ and $R/R_4=1$ then

$$\frac{d^3y}{dt^2} = v_o = (-\frac{R}{R_1})y + (-\frac{R}{R_2})\frac{dy}{dt} + (-\frac{R}{R_3})(-\frac{d^2y}{dt^2}) + (-\frac{R}{R_4})(-x(t)) =$$

$-3y-4dy/dt+5d^2y/dt+x(t)$, as it should be.

16-29 Due to the infinite input resistance of the OP AMP $I_1=(V_i-V_o)/Z$.

Due to the virtual short circuit V_i appears at the common node of the two resistors, and $V_i = \frac{RV_o}{R+R}$ or $V_o = 2V_i$ (there is no current in the neg. terminal of the OP AMP). Thus

$I_i = (V_i - 2V_i)/Z$ and $Z_i = V_i/I_i = -Z$

16-30 (a) OP AMP (1) with input V_i and output V_1 is connected in the standard inverting mode. Thus

$V_1/V_i = -R_2/R_1$ (1)

(b) $\frac{V_2}{V_i} = \frac{V_2}{V_1}\frac{V_1}{V_i} = (-\frac{2R_1}{R_2})(-\frac{R_2}{R_1}) = 2$ (2)

(c) Let I_3 and I_1 be the currents in R_3 and R_1, respectively. Then

$$I_i = I_1 + I_3 = \frac{V_i}{R_1} + \frac{V_i - V_2}{R_3} = \frac{V_i}{R_1} + \frac{V_i - 2V_i}{R_3} = \frac{R_3 - R_1}{R_1 R_3} V_i$$

and $R_i = \frac{V_i}{I_i} = \frac{R_1 R_3}{R_3 - R_1}$ Q.E.D.

16-31 (a) Let V_1 and V_2 be the voltages at P_1 and P_2, respectively. Because of the virtual short circuit at the input of the OP AMP the voltage at the common node of the two resistances R_3 is V_i and, due to the zero input current into the OP AMP $V_1 = 2V_i$. $V_2 = -ZV_1/2R_2 = -ZV_i/R_2$. Applying KCL at the input node $I_i = \frac{V_i - V_1}{R_1} + \frac{V_i - V_2}{R_1} =$

$\frac{V_i - 2V_i}{R_1} + \frac{V_i + ZV_i/R_2}{R_1} = \frac{1}{R_1}(-V_i + V_i + ZV_i/R_2) =$

ZV_i/R_2R_1. Thus $Z_i = V_i/I_i = R_1R_2/Z$ (1)

(b) If Z is a capacitor of C F, then $Z=1/sC$ and $Z_i = (R_1R_2C)s$ which represents an inductor whose value L is $L = R_1R_2C$ (2)

(c) From (2) $C = L/R_1R_2 = 1\,H/10^3 \times 10^3 \Omega^2 = 10^{-6} F = 1\,\mu F$.

16-32 (a) From Table 16-1 $B_1(s)=(s+1)$. Thus $B_1(j\omega)B_1(-j\omega) = (j\omega+1)(-j\omega+1) = 1+\omega^2$

(b) $B_2(s) = (s^2+1.414s+1)$. Thus $B_2(j\omega)B_2(-j\omega) =$ $(-\omega^2+1.414j\omega+1)(-\omega^2-1.414j\omega+1) = (1-\omega^2)^2+(1.414\omega)^2 =$ $1+\omega^4$ (Notice $1.414 \approx \sqrt{2}$)

16-33 From Table 16-1 $B_3(s)=(s+1)(s^2+s+1)$. Thus $B_3(j\omega)\,B_3(-j\omega) = (j\omega+1)(-\omega^2+j\omega+1)(-j\omega+1)(-\omega^2-j\omega+1) =$ $(1+\omega^2)((1-\omega^2)^2+\omega^2) = (1+\omega^2)(1-\omega^2+\omega^4) = 1+\omega^6$

16-34 From Table 16-1, $B_4(s) = (s^2+0.765s+1)(s^2+1.848s+1)$. Thus $B_4(j\omega)B_4(-j\omega) = (-\omega^2+0.765j\omega+1)(-\omega^2+1.848j\omega+1) \times$ $(-\omega^2-0.765j\omega+1)(-\omega^2-1.848j\omega+1) =$ $((1-\omega^2)^2+0.58523\omega^2)((1-\omega^2)^2+3.4151\omega^2) =$ $(1-\omega^2)^4+4\omega^2(1-\omega^2)^2+2\omega^4 = 1-4\omega^2+6\omega^4-4\omega^6+\omega^8+4\omega^2$ $-8\omega^4+4\omega^6+2\omega^4 = 1+\omega^8$

16-35

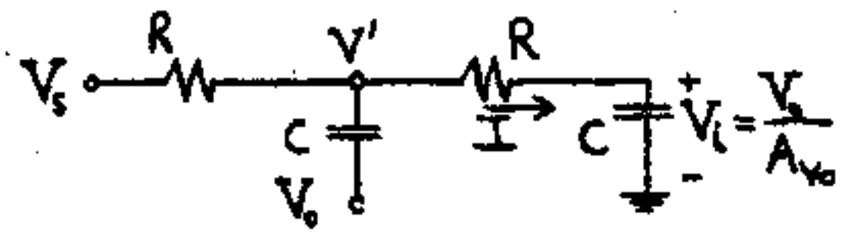

From Eq. (16-27)

$$V' = I\left(R + \frac{1}{sC}\right) = \frac{V_o}{A_{Vo}}(sCR+1) \quad \text{where } I = sCV_i = sC\frac{V_o}{A_{Vo}}$$

KCL at node V' gives

$$-\frac{V_s}{R} + \frac{V'}{R} + I + sCV' - sCV_o = 0$$

$$-\frac{V_s}{R} + \frac{V_o}{A_{Vo}R}(sCR+1) + sC\frac{V_o}{A_{Vo}} + sC\frac{V_o}{A_{Vo}}(sCR+1) - sCV_o = 0$$

$$\frac{A_{Vo}V_s}{V_o} = sCR+1+sCR+sCR(sCR+1)-sCRA_{Vo} = (sCR)^2+3sCR-sCRA_{Vo}+1$$

$$\frac{A_{Vo}}{A_V(s)} = (sCR)^2+sCR(3-A_{Vo})+1 \qquad \text{Q. E. D.}$$

16-36

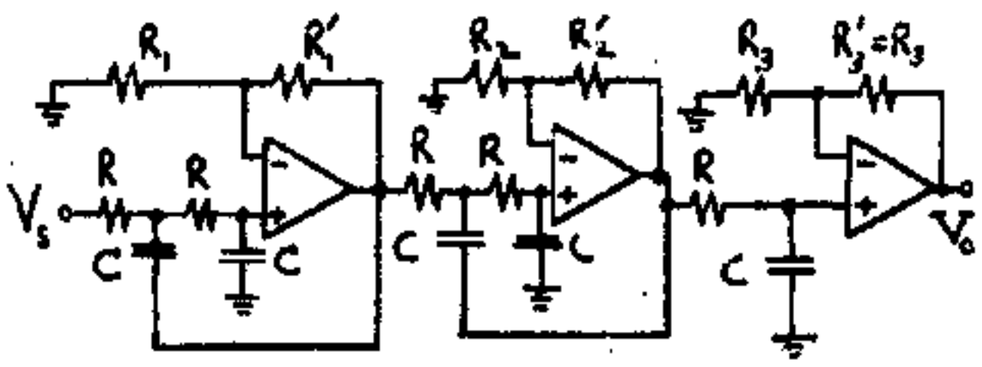

We cascade two second-order prototypes of the type indicated in Fig. 16-18a and the first-order prototype of Fig. 16-18b,

for n=5 we have (using Eq. (16-30) and Table 16-1)

$A_{V1} = 3-2k_1 = 3-0.618 = 2.382$ (1)

$A_{V2} = 3-2k_2 = 3-1.618 = 1.382$ (2)

$\omega_o = 2\pi f_o = 1/RC$ or $R = 1/2\pi f_o C = 1/2\pi 10^3 \times 10^{-8} =$ <u>15.92 kΩ.</u>

If we arbitrarily choose $R_1 = R_2 = R_3 = 10$ kΩ, then from Eq. (1) $A_{V1} = 2.382 = (R_1+R_1')/R_1$ or

$R_1' =$ <u>13.82 kΩ,</u> and from Eq. (2) $A_{V2} = 1.382 = (R_2+R_2')/R_2$ or $R_2' =$ <u>3.82 kΩ</u>

16-37

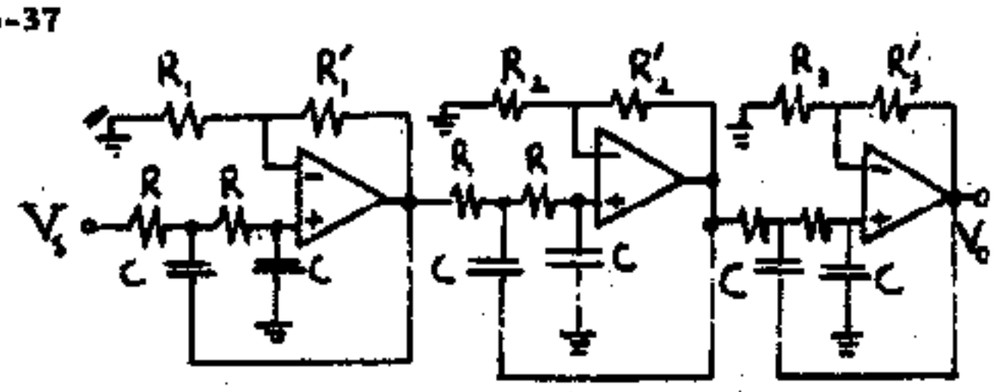

$\omega_o = 2\pi f_o = 1/RC$ means $R = 1/2\pi f_o C =$ <u>3.18 kΩ</u>

Choose arbitrarily $R_1 = R_2 = R_3 =$ <u>10 kΩ</u>. Then, from Eq. (16-30) and Table 16-1 with n=6 we have

$A_{V1} = 3-2k_1 = 3-0.518 = 2.482 = (R_1+R_1')/R_1$ or

$R_1' =$ <u>14.82 kΩ</u>

$A_{V2} = 3-2k_2 = 3-1.414 = 1.586 = (R_2+R_2')/R_2$ or

$R_2' =$ <u>5.86 kΩ</u>

$A_{V2} = 3-2k_3 = 3-1.932 = 1.068 = (R_3+R_3')/R_3$ or

$R_3' =$ <u>680 Ω</u>

16-38 Cascade a high and a low pass:

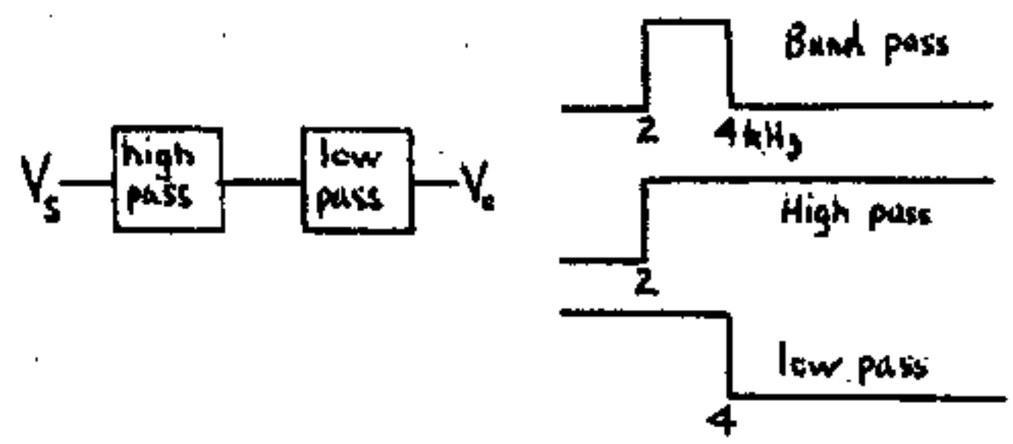

Then only the frequencies between 2 and 4 will pass through the filter.

The low pass is given by a cascade of a first and a second order. Thus

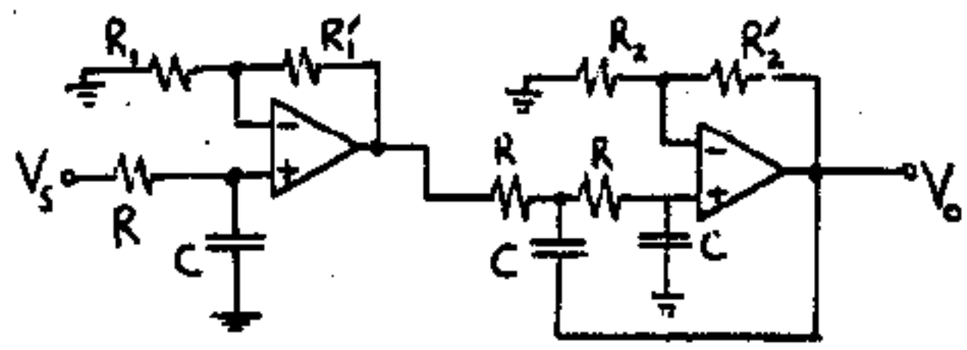

$RC = \frac{1}{2\pi f}$ where f=4000 for the low pass

$\therefore R = \frac{1}{2\pi 4000 \times 10^{-8}} = \frac{10^5}{8\pi}\ \Omega = 3.98\ \text{k}\Omega$

R_1' and R_1 are arbitrary

For the second order $A_{Vo} = 3-2k = 3-1 = 2 = 1+\frac{R_2'}{R_2}$

$\therefore R_2' = R_2$

Choose R_2 arbitrarily, say $R_2 = 10$ kΩ and then $R_2' = R_2$. The high pass filter is as indicated above except that R and C are interchanged, and

$R = \frac{1}{2\pi \times 2000 \times 10^{-8}} = 2 \times 3.98 = 7.96$ kΩ because f = 2000.

16-39

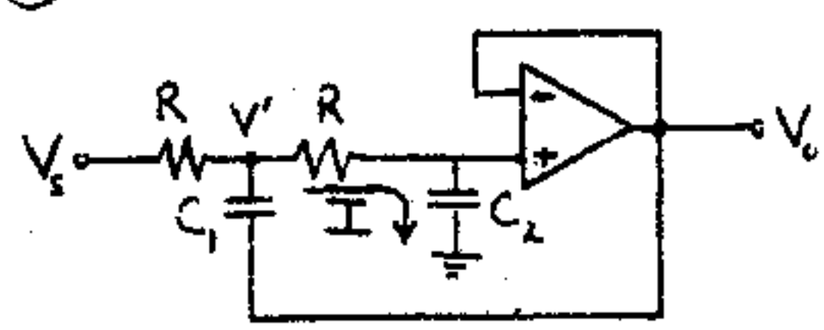

(a) The voltage across C is V and the current

ω_0

16-42 In the text Eq. (16-46) is $V' = -V_o/sCR_3$ and $I_3 = V_o/R_3$. KCL at node V' is

$$-I_3 + sCV' + \frac{V'}{R_1} + \frac{V'}{R_2} - \frac{V_s}{R_1} - sCV_o = 0$$

Using the above values of I_3 and V' gives

$$\frac{V_s}{R_1} = -\frac{V_o}{R_3} - \left(\frac{1}{R_1} + \frac{1}{R_2} + sC\right)V_o\left(\frac{1}{sCR_3}\right) - sCV_o$$

$$\frac{-V_s}{V_oR_1} = +\frac{1}{R_3} + \frac{1}{R'sCR_3} + \frac{1}{R_3} + sC \quad \text{where } R' = R_1 \| R_2$$

$$\frac{-V_s}{V_oR_1} = \frac{1}{sCR'R_3}\left(2sCR' + 1 + s^2C^2R'R_3\right)$$

$$\frac{V_o}{V_s} = \frac{-sCR'R_3/R_1}{s^2C^2R'R_3 + 2sCR' + 1} = \frac{-s/R_1C}{s^2 + \frac{2s}{CR_3} + \frac{1}{C^2R'R_3}}$$

Q. E. D.

16-43

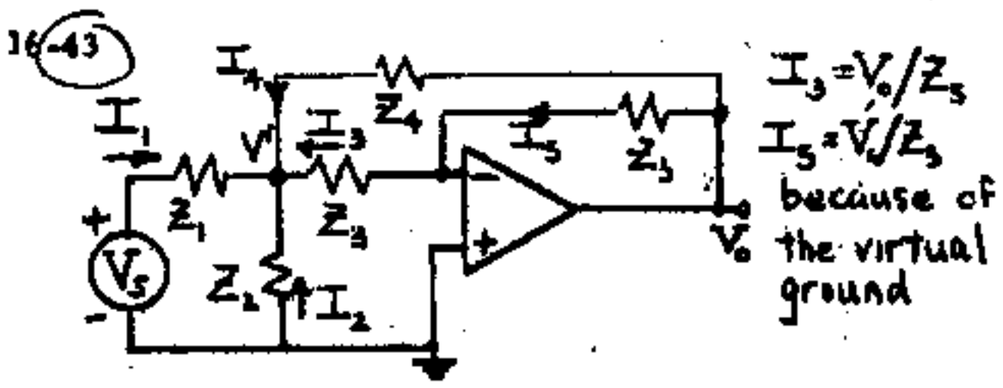

$$V' = -\frac{V_oZ_3}{Z_5} \qquad I_4 = \frac{V_o - V'}{Z_4}$$

$$I_1 = \frac{V_s - V'}{Z_1} \qquad I_2 = -\frac{V'}{Z_2}$$

KCL at node V'

$$I_1 + I_2 + I_3 + I_4 = 0$$

$$\frac{V_s - V'}{Z_1} - \frac{V'}{Z_2} + \frac{V_o}{Z_5} + \frac{V_o - V'}{Z_4} = 0$$

$$\frac{V_s}{Z_1} + \frac{V_o}{Z_5} + \frac{V_o}{Z_4} = V'\left(\frac{1}{Z_1} + \frac{1}{Z_2} + \frac{1}{Z_4}\right) = -V_o\frac{Z_3}{Z_5}\left(\frac{1}{Z_1} + \frac{1}{Z_2} + \frac{1}{Z_4}\right)$$

$$V_sY_1 = -V_o\left[(Y_5 + Y_4 + \frac{Y_5}{Y_3}(Y_1 + Y_2 + Y_4)\right]$$

$$\frac{V_o}{V_s} = \frac{-Y_1Y_3}{Y_3(Y_5 + Y_4) + Y_5(Y_1 + Y_2 + Y_4)}$$

Q. E. D.

16-44

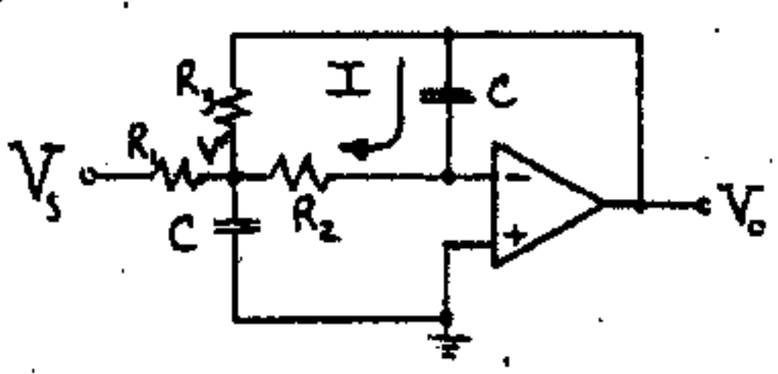

(a) Because of the virtual ground V_o is across C or $I = sCV_o$ and $V' = -IR_2 = -sCR_2V_o$.

KVL at node V' is

$$-I + \frac{V'}{R_1} + \frac{V'}{R_3} + sCV' - \frac{V_o}{R_3} - \frac{V_s}{R_1} = 0$$

$$\frac{V_s}{R_1} = -sCV_o + -sCR_2V_o\left(\frac{R_1 + R_3}{R_1R_3}\right) - s^2C^2R_2V_o - \frac{V_o}{R_3}$$

$$-\frac{V_s}{R_1V_o} = s^2C^2R_2 + sC\left[1 + \frac{R_2}{R_1R_3}(R_1 + R_3)\right] + \frac{1}{R_3}$$

$$-\frac{R_3V_s}{R_1V_o} = s^2C^2R_2R_3 + sC\left[R_3 + \frac{R_2}{R_1}(R_1 + R_3)\right] + 1$$

$$\frac{V_o}{V_s} = \frac{-R_3/R_1}{s^2C^2R_2R_3 + sC(R_3 + R_2 + R_2R_3/R_1) + 1}$$

(b) For a gain of -1, $R_3 = R_1$. Hence, matching coefficients of s^2 and s in this equation with Eq. (16-24) yields

$$\frac{V_o}{V_s} = \frac{-1}{s^2C^2R_2R_1 + sC(R_1 + 2R_2) + 1}$$

$$\frac{1}{\omega_o^2} = C^2R_2R_1 \quad (1) \qquad \text{and} \qquad \frac{2k}{\omega_o} = (R_1 + 2R_2)C \quad (2)$$

$$\text{or} \quad \frac{4k^2}{\omega_o^2} = (R_1 + 2R_2)^2C^2 \quad (3)$$

Dividing (3) by (1): $4k^2 = \dfrac{(R_1 + 2R_2)^2}{R_2R_1}$ (4)

Since this is one equation for two unknowns then either R_1 or R_2 may be chosen arbitrarily. Let us choose R_1 arbitrarily and Eq. (4) is a quadratic for R_2. Knowing R_1 and R_2 Eq. (1) is solved for C. We found above that $R_3 = R_1$. To summarize; one parameter, say R_1, is chosen arbitrarily. Then $R_3 = R_1$ and Eqs. (4) and (1) give R_2 and C.

16-45 (a)

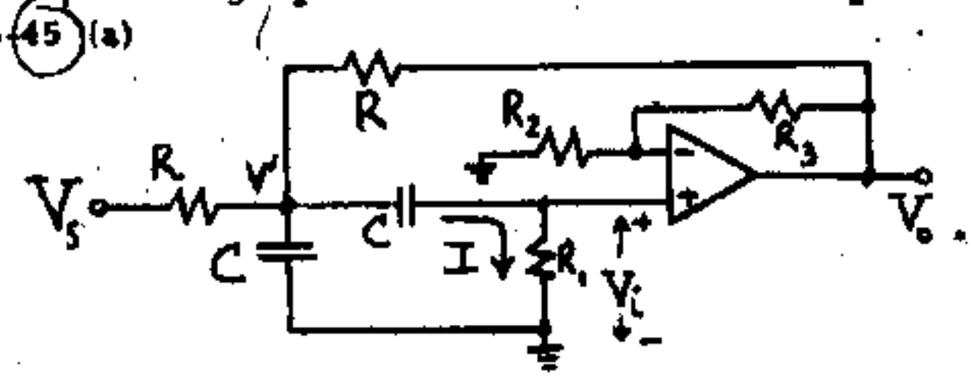

$$V_i = \frac{V_o}{A} \quad \therefore \quad I = \frac{V_i}{R_1} = \frac{V_o}{R_1A}. \quad V' = I\left(R_1 + \frac{1}{sC}\right)$$

$$= \frac{V_o}{R_1A}\left(R_1 + \frac{1}{sC}\right) = \frac{1 + sCR_1}{sCR_1A}V_o$$

KCL at V' gives

$$I + sCV' + \frac{2V'}{R} - \frac{V_o}{R} - \frac{V_s}{R} = 0$$

$$\frac{V_s}{R} = \frac{V_o}{R_1A} + \frac{(sCR + 2)}{R}\frac{(1 + sCR_1)V_o}{sCR_1A} - \frac{V_o}{R}$$

$$\frac{V_s}{V_o} = \frac{R}{R_1A} + \frac{sCR + s^2C^2RR_1 + 2 + 2sCR_1}{sCR_1A} - 1$$

$$= \frac{sCR + sCR + s^2C^2RR_1 + 2 + 2sCR_1 - sCR_1A}{sCR_1A}$$

$$= \frac{s^2C^2RR_1+sC(2R+2R_1-R_1A)+2}{sCR_1A}$$

$$\frac{V_o}{V_s} = \frac{sCR_1A}{s^2C^2RR_1+sC[2R+R_1(2-A)]+2}$$

$$= \frac{\frac{sA}{CR}}{s^2+s\frac{[2R+R_1(2-A)]}{CRR_1}+\frac{2}{C^2RR_1}}$$

(b) Comparing coefficients of s and s^2 in this equation with Eq. (16-45) we obtain

$$\frac{\omega_oA_o}{Q} = \frac{A}{CR} \qquad \frac{\omega_o}{Q} = -\frac{2R+R_1(2-A)}{CRR_1} \text{ and } \omega_o^2 = \frac{2}{C^2RR_1}$$

These three equations are for the five parameters R, R_1, C, and $A = 1+\frac{R_3}{R_2}$ Hence, two parameters may be chosen arbitrarily.

16-46 $40\text{ dB} = 20\log_{10}|A_o| \quad A_o = -100 \quad f = 200\text{ Hz}$

$Q = 12 \quad C = 0.01\ \mu F$

From Eq. (16-49)

$$R_1 = \frac{Q}{C\omega_o(-A_o)} = \frac{12}{10^{-8}\times 2\pi\times 200\times 100}$$

$$= \frac{3\times 10^4}{\pi}\ \Omega = \underline{9.55\ k\Omega}$$

From Eq. (16-50) $R_3 = \frac{2Q}{\omega_oC} = \frac{24}{2\pi\times 200\times 10^{-8}}$

$$= \frac{6\times 10^6}{\pi}\ \Omega = \underline{1.91\ M\Omega}$$

From Eq. (16-52) $R' = \frac{1}{2\omega_oQC} = \frac{1}{4\pi\times 200\times 12\times 10^{-8}}$

$$= \frac{10^6}{96\pi} = \underline{3.316\ k\Omega}$$

From Eq. (16-48) $R_2 = \frac{R_1R'}{R_1-R'} = \frac{9.55\times 3.316}{9.55-3.316} = \underline{5.08\ k\Omega}$

16-47 From Eq. (16-42) $Q = f_o/B = 160/16 = 10$.

Notice that at ω_o the input resistance is

$$Z = j\omega_oL+\frac{1}{j\omega_oC}+R = j\frac{L}{\sqrt{LC}}-j\frac{\sqrt{LC}}{C}+R = R$$

where $\omega_o = 1/LC$ was used. This is the minimum resistance seen by V_s; thus $\underline{R = 1\ k\Omega}$.

From Eq. (16-34) $L = \frac{QR}{\omega_o} = \frac{QR}{2\pi f_o} = \frac{10\times 1000}{2\pi\times 160} = \underline{9.95\ H}$

$$C = \frac{1}{2\pi f_oRQ} = \frac{1}{2\pi\times 160\times 1000\times 10} = \underline{99.5\ nF}.$$

The value of L is too large to be practical.

16-48 From Eq. (16-48)

$$R_2 = \frac{R_1R'}{R_1-R'} = \infty \qquad \therefore\ R_1 = R'$$

From Eqs. (16-49) and (16-52)

$$\frac{Q}{C\omega_o(-A_o)} = \frac{1}{2C\omega_oQ} \qquad \therefore\ A_o = -2Q^2 = -2\times 4 = \underline{-8}$$

From Eq. (16-49) $R_1 = \frac{Q}{C\omega_o(-A_o)} = \frac{2}{10^{-7}\times 500\times 8}\ \Omega = \underline{5\ k\Omega}$

From Eq. (16-50) $R_3 = \frac{2Q}{C\omega_o} = \frac{4}{10^{-7}\times 500}\ \Omega = \underline{80\ k\Omega}$

16-49

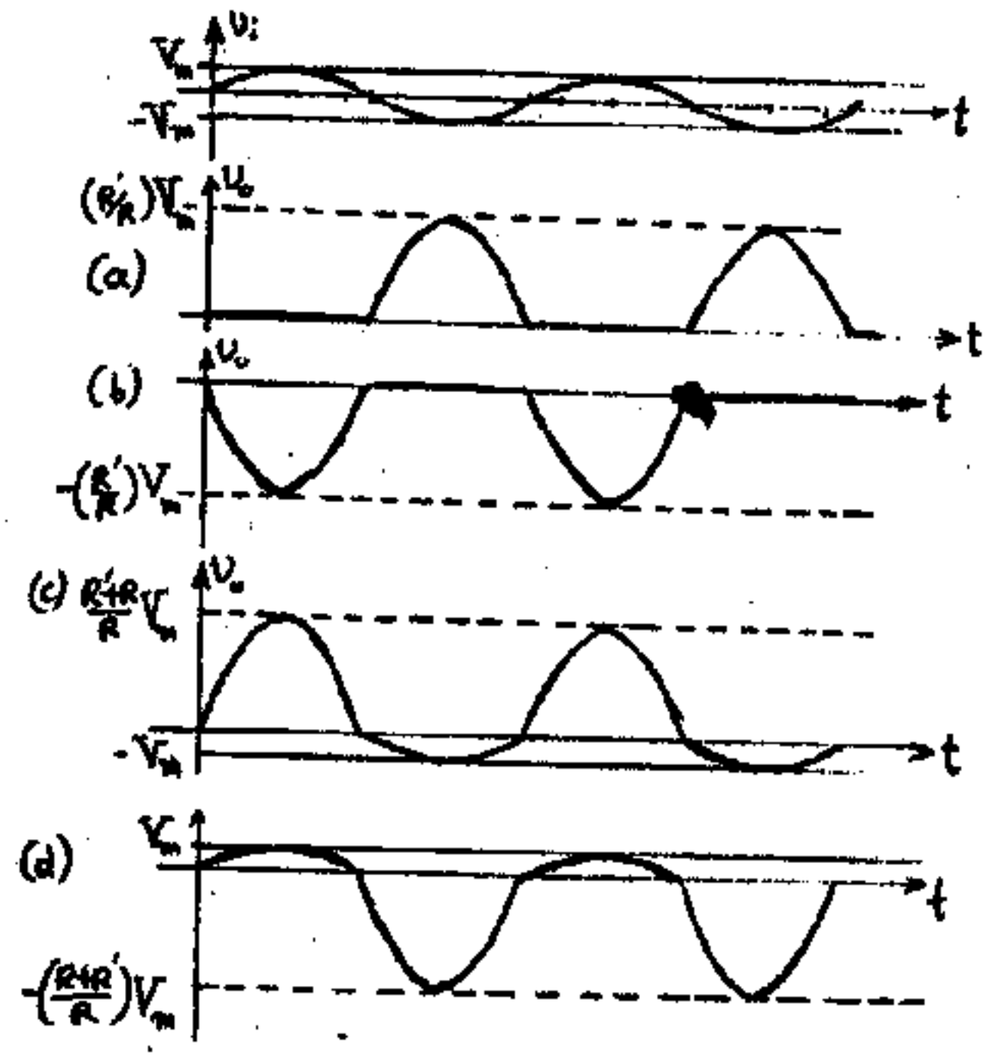

16-50 (a) First concentrate on the first OP AMP stage, i.e. let us see what is the relationship of v_p to v_i. Clearly, this is the same as Fig. 16-26 with the two diodes reversed. Thus, as we found in Prob. 16-49b (with $R' = R$):

$$v_p = \begin{cases} 0 & \text{if } v_i < 0 \\ -R'v_i/R = -v_i & \text{if } v_i > 0 \end{cases} \qquad (1)$$

(See the waveforms in part (b) of Prob. 16-49) Notice now, that the second stage is a simple adder, i.e.

$$v_o = -\frac{R_3}{R_1}v_p-\frac{R_3}{R_2}v_i = \begin{cases} -\frac{R_3}{R_2}v_i & \text{if } v_i < 0 \\ \left(\frac{R_3}{R_1}-\frac{R_3}{R_2}\right)v_i & \text{if } v_i > 0 \end{cases} \qquad (2)$$

where Eq. (1) was used. Notice now that, if $v_i < 0$, then $v_o = -R_3v_i/R_2$ is a rectified version of the input. We desire that $v_o = +R_3v_i/R_2$ for proper full-wave rectification. Hence

$$\frac{R_3}{R_1}-\frac{R_3}{R_2} = \frac{R_3}{R_2} \quad \text{or} \quad R_2 = 2R_1 \qquad \text{Hence } \underline{K = 2}.$$

(b) The peak value of the rectified output is $\underline{R_3V_m/R_2}$, where V_m is the peak value of the input sinusoid.

(c)

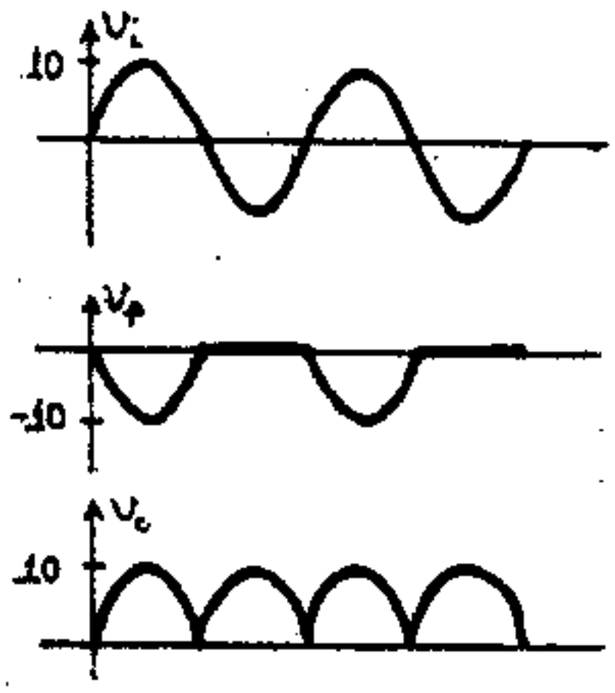

16-51 It is necessary to use a positive peak detector and a negative peak detector and to take the difference of these two voltages with a DIFF AMP. Thus

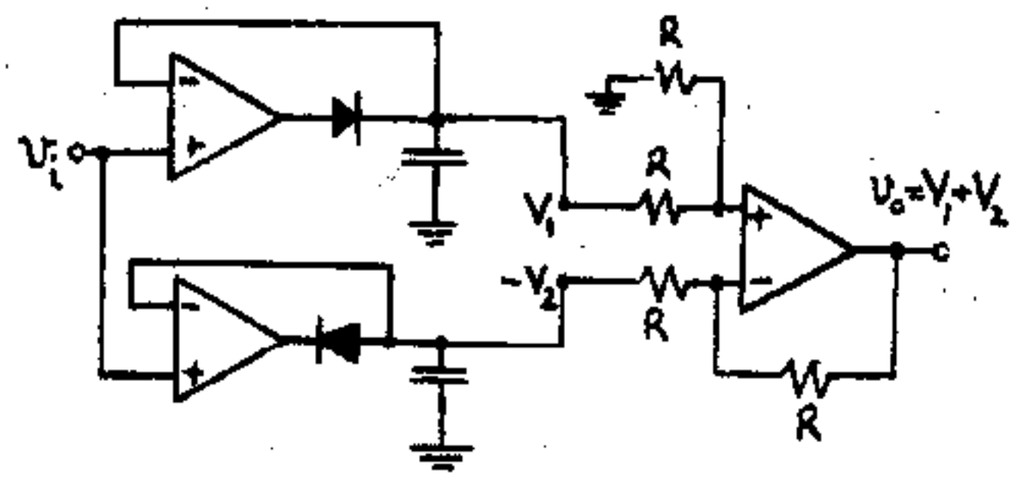

16-52 (a) See Fig. (a) below. During sampling the voltage across C changes until $v_o=v_i$ at which time the input OP AMP delivers no further current to C. When the switch opens C holds its charge and v_o is constant at voltage across C at the end of the sampling interval. Hence, the S-H operation is performed.

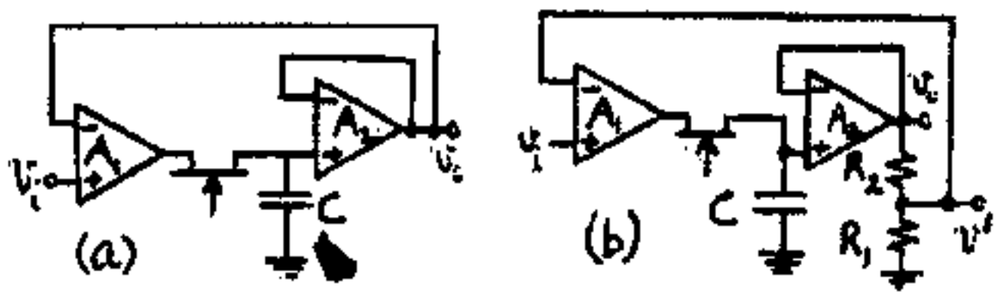

(b) See Fig. (b) above. During sampling $v'=v_i$

Hence, $v_o=\frac{v'}{R_1}(R_1+R_2)=v_i(1+\frac{R_2}{R_1})$

This is a non-inverting S+H system with a gain $1+\frac{R_2}{R_1}$

(c)

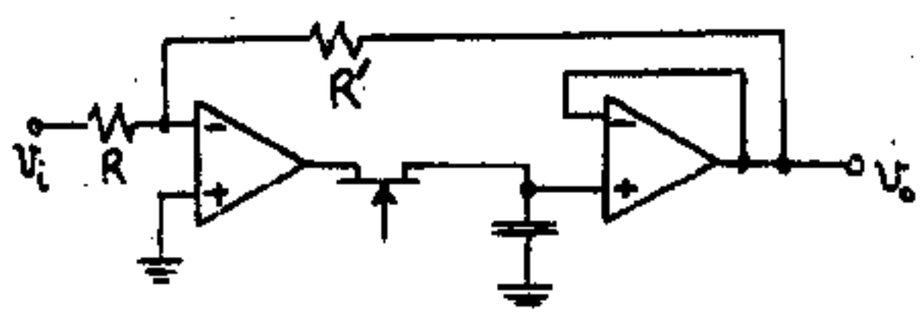

During sampling this is a two-stage OP AMP connected in the inverting mode. Hence $v_o=-(R'/R)v_i$. The capacitor voltage is v_o because the gain of the output OP AMP is +1. During the hold period v_o continues to equal $-(R'/R)v_i$ as long as the capacitor holds its charge.

16-53

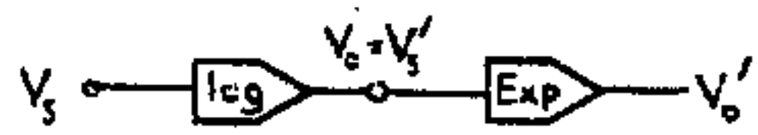

(a) From Eq. (16-67) $V_o=V_s'=-K_1 \ln K_2 V_s$

and from Eq. (16-68) $V_o'=\frac{1}{K_2}\exp(-V_s'/K_1)=$

$$\frac{1}{K_2}\exp\left(\frac{-K_1 \ln K_2 V_s}{-K_1}\right)=\frac{1}{K_2}(K_2 V_s)=V_s$$

(b) Call the constants of the exponential amplifier K_1' and K_2'. Then

$$V_o'=\frac{1}{K_2'}\exp\left(\frac{-V_s'}{K_1'}\right)=\frac{1}{K_2'}\exp\left(\frac{K_1}{K_1'}\ln K_2 V_s\right)$$

$$=\frac{1}{K_2'}\exp[\ln(K_2 V_s)^n] \quad \text{where} \quad n=\frac{K_1}{K_1'}$$

$$V_o'=\frac{(K_2 V_s)^n}{K_2'}$$

(c) From Eq. (16-60) $K_1=V_T\frac{R_3'+R_4}{R_3'}=V_T\frac{0.5+29.5}{0.5}$

$=60\ V_T$ where R_3' refers to the log. amplifier.

$K_1'=V_T\frac{R_3+R_4}{R_3}=V_T\frac{R_3+29.5}{R_3}$

Also, from Eq. (16-65) we obtain $K_1'=V_T\frac{R_3+R_4}{R_3}$

$=V_T\frac{R_3+29.5}{R_3}$ Thus $n=\frac{K_1}{K_1'}=\frac{60\ R_3}{R_3+29.5}$

For $n=3$: $3R_3+(3)(29.5)=60\ R_3$ or $R_3=\underline{1.553\ k\Omega}$

$n=1/3$: $180R_3=R_3+29.5$ or $R_3=\underline{0.165\ k\Omega}$

16-54 Notice that, since $A=\infty$, the input to the OP AMP must be zero (virtual ground) for the output to be finite. Thus

$$V_i=V_1-\beta V_o V_2=0 \quad \text{or} \quad V_o=\frac{1}{\beta}\frac{V_1}{V_2} \quad \text{and} \quad K=1/\beta$$

16-55 (a) In the text it is shown that if bit N-3 is 1 and and all others are zero, that node N-3 is at $V_R/3$ volts. The ladder is indicated below

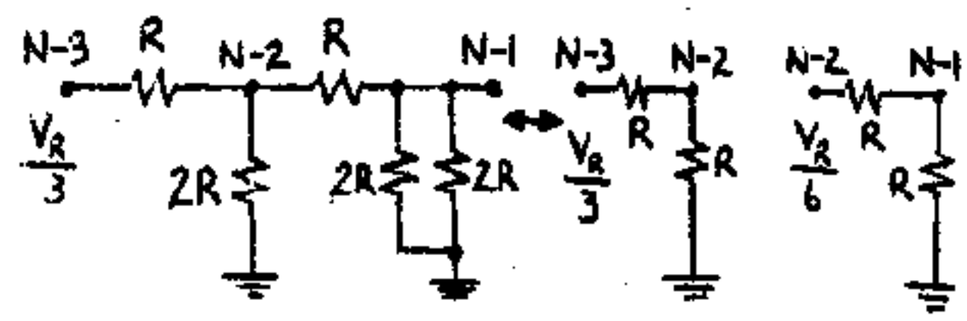

Hence, the voltage at N-2 is half that at N-3 or $\frac{V_R}{6}$. The voltage at N-1 is half that at N-2 or

$$V_{N-1} = \frac{V_R}{12}$$

$$V_o = V_{N-1}(1+\frac{R'}{R_1}) = \frac{V_R}{12}(1+\frac{R'}{R_1}) = \frac{V'}{4}$$

(b) Note from part (a) that as we move down the ladder from left to right, the nodal voltages are divided by two at each adjacent node. For N=5, N-1=4 and hence we have four nodes. At node 0, the voltage is $V_R/3$; at node 1, it is $V_R/6$. At node 2 it is $V_R/12$; at node 3, it is $V_R/24$ and at node 4 (which is the input to the OP AMP), it is $V_R/48$.

Hence, $V_o = \frac{V_R}{48}(1+\frac{R'}{R_1}) = \frac{V'}{16}$

16-56 (a) Since the resistance seen by V_R is 2R in parallel with $R+2R \| 2R = 2R$ or R then $I = V_R/R$. This result is independent of the digital word because if the pole of the switch goes to the OP AMP input it is effectively grounded (because of the virtual short circuit). Hence, whether the bit is a logic 1 or logic 0 the pole is grounded.

The above reasoning indicates that the current in each resistor of the ladder is constant independent of the switch position. Hence, propagation delay time has been eliminated. The only transient is due to the very short time it takes a switch pole to move from logic 1 to 0 or vice versa.

(b)

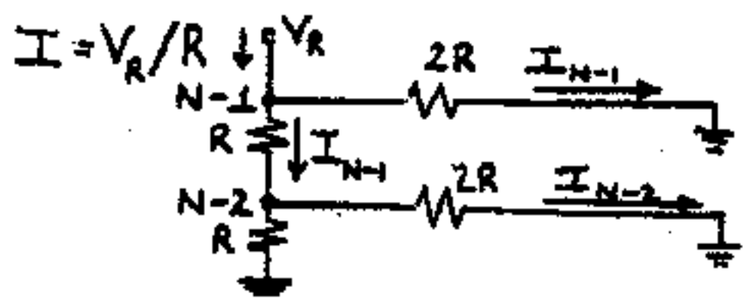

$I_{N-1} = \frac{V_R}{2R}$ because I divides between two parallel resistors, each equal to 2R.

$$V_o = -2RI_{N-1} = -V_R$$

(c) $I_{N-2} = \frac{1}{2} I_{N-1}$ from the figure.

and $V_o = -2RI_{N-2} = -\frac{V_R}{2}$

(d) Note that the voltage due to a particular bit is 1/2 that of the next higher order bit.

For N=4, if the MSB gives $V_o = -V_R$ then due to the LSB, $V_o = -V_R/2^{N-1} = -V_R/8$.

CHAPTER 17

17-1 (a) If $A_V = \infty$ then a very small positive voltage gives an output voltage which causes V_{Z1} to break down. Hence, the feedback loop is closed, and there is a virtual short circuit between input terminals. Therefore, $v_o = V_{Z1} + V_D = 10.7$ V. Similiarly if v_i tries to go negative V_{Z2} breaks down and $v_o = -10.7$ V

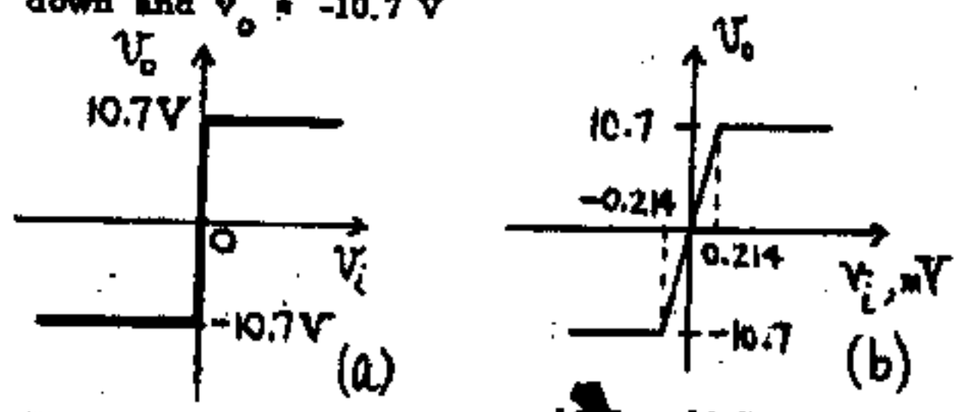

(b) If $A_V = 50{,}000$ then $\Delta v_i = \frac{10.7}{A_V} = \frac{10.7}{50}$ mV = 0.214 mV before V_{Z1} breaks down. The transfer characteristic is shown.

(c) By the argument in (a) $v_o = V_{Z1} + V_D + V_R = 14.7$ V for $v_i > 0$ and $v_o = -10.7 + 4 = -6.7$ V for $v_i < 0$. The characteristic in (a) is shifted upward by 4 V.

17-2 (a)

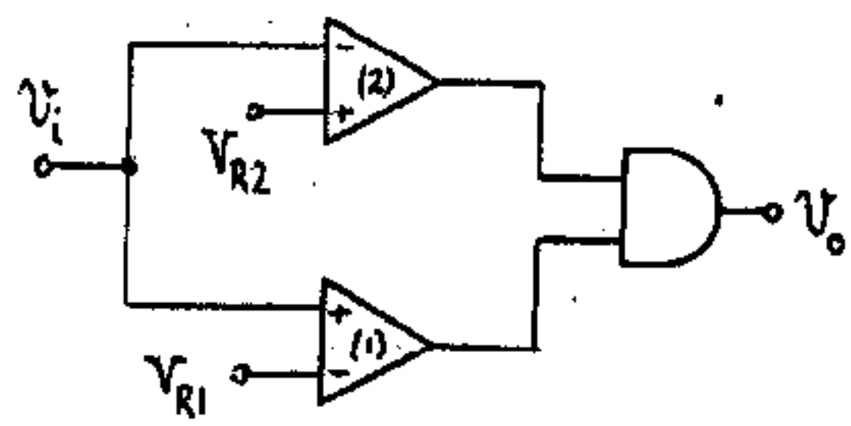

Comparator (1) gives 1 only if $v_i > V_{R1}$.
Comparator (2) gives a 1 only if $v_i < V_{R2}$.

Hence, $v_o = 1$ only if $V_{R2} > v_i > V_{R1}$.

(b) $V_{R2} - V_{R1} = 50$ mV = constant. V_{R1} must vary from 0 to 10 V without affecting the 50-mV window. Obtain V_{R1} and V_{R2} as follows

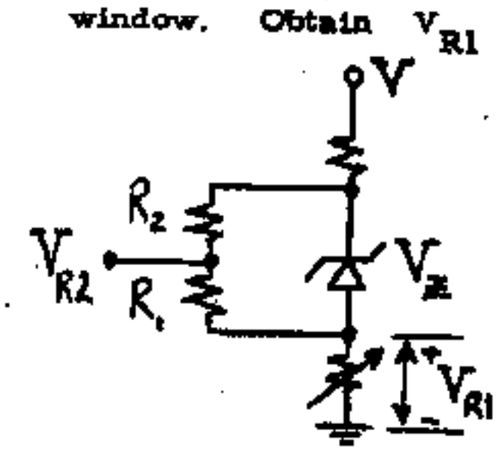

$$V_{R2} - V_{R1} = \frac{R_1 V_Z}{R_1 + R_2} = 50 \text{ mV}$$

17-3 If $V_1 = V_R$ then from Eq. (17-1), $V_o = V_R$

Then from Eq. (17-2) $V_2 = V_R - \frac{R_2(2V_R)}{R_1+R_2}$ (1)

From Eq. (17-3) $V_H = \frac{2R_2V_O}{R_1+R_2} = 2V_R\left(\frac{R_2}{R_1+R_2}\right) = 0.1$ (2)

The loop gain is $\beta A_V = \frac{R_2}{R_1+R_2}A_V = 1000$ (3)

or $\frac{R_2}{R_1+R_2} = \frac{1000}{100{,}000} = 0.01$ (4)

From (2) and (4)

$$V_R = \frac{0.1}{0.02} = \underline{5\ V} = V_o = V_Z + 0.7 \quad \therefore \quad V_Z = \underline{4.3\ V}$$

If $R_2 = 1\ k\Omega$ then $R_1 + 1 = \frac{1}{0.01}\ \Omega$ from Eq. (4) or

$R_1 = 99\ k\Omega$

17-4 (a) $V_H = \frac{2R_2(V_Z+V_D)}{R_1+R_2}$ Eq. (17-3). Assume

$V_D = 0.7\ V$ $\quad \frac{R_1}{R_2} + 1 = \frac{(2)(6.7)}{0.2} = 67 \quad \therefore \quad \underline{\frac{R_1}{R_2} = 66}$

$V_1 = V_R + \frac{R_2}{R_1+R_2}(V_o - V_R) = 0$ Eq. (17-1)

$V_R\left(1 - \frac{R_2}{R_1+R_2}\right) = -\frac{R_2V_o}{R_1+R_2}$ or $V_R = -\frac{R_2}{R_1}V_o = \frac{6.7}{66}$

$= \underline{0.102\ V}$

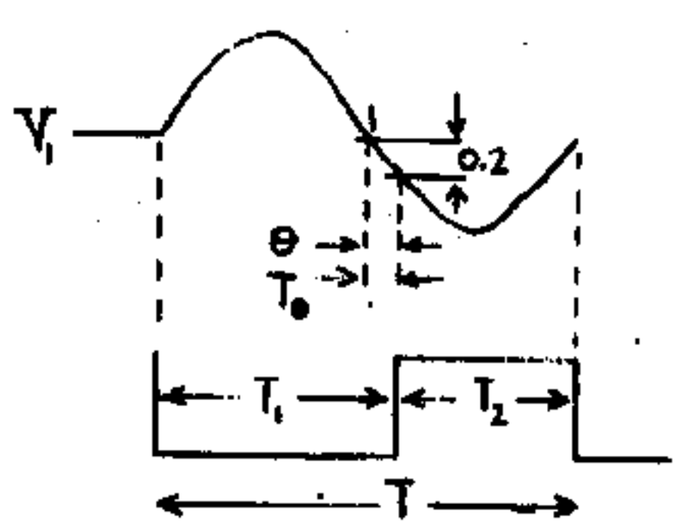

(b) If $V_1 = 0$ and $V_H = V_1 - V_2 = 0.2$ then $V_2 = -0.2$

$2 \sin\theta = 0.2$ $\quad \theta = \arcsin 0.1 = 0.1$ radian The period is $T = \frac{1}{f} = \frac{1}{1000} = 10^{-3}$ sec $= 1$ ms

$$\omega T_\theta = 2\pi \times 1000\ T_\theta = 0.1$$

$$T_\theta = \frac{0.1}{2\pi}\ \text{ms} = 0.016\ \text{ms}$$

$T_1 = \frac{T}{2} + T_\theta = 0.516$ ms $\quad T_2 = \frac{T}{2} - T_\theta = 0.484$ ms

17-5 (a) From Eq. (17-3)

$V_H = V_1 - V_2 = \frac{2R_2V_o}{R_1+R_2}$ $\quad 4 - 3 = 16\frac{R_2}{R_1+R_2}$

$1 + \frac{R_1}{R_2} = 16$ $\quad \underline{\frac{R_1}{R_2} = 15}$

From Eq. (17-1)

$V_R + \frac{R_2}{R_1+R_2}(V_o - V_R) = V_1$ $\quad V_R + \frac{1}{16}(8 - V_R) = 4$ $\quad V_R = \underline{3.73\ V}$

(b) From Eq. (17-2), if V_2 is negative

$V_R < \frac{R_2}{R_1+R_2}(V_o + V_R)$ $\quad (R_1+R_2)(V_R) - R_2V_R < R_2V_o$

$\underline{V_R < \frac{R_2}{R_1}V_o}$

(c) For $V_1 = -V_2$ $\quad V_R + \frac{R_2}{R_1+R_2}(V_o - V_R) =$

$-V_R + \frac{R_2}{R_1+R_2}(V_o + V_R)$

$2V_R = \frac{2R_2V_R}{R_1+R_2}$ or $V_R = 0$.

17-6 (a)

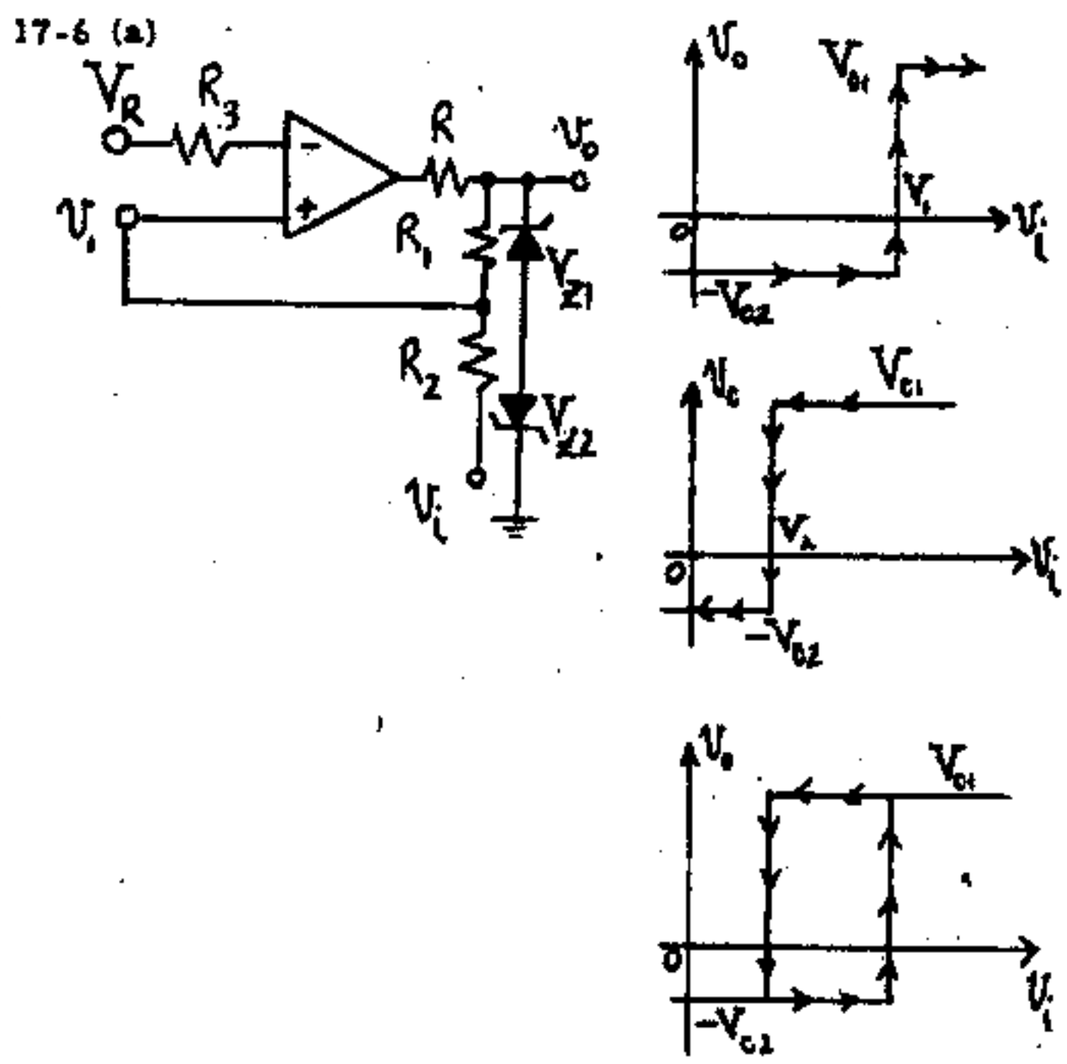

(b) If $v_1 < V_R$ then $v_o = -V_{o2} = -(V_{Z2}+V_D)$ and by superposition

$$v_1 = v_1\frac{R_1}{R_1+R_2} - V_{o2}\frac{R_2}{R_1+R_2} \qquad (1)$$

If $v_1 \geq V_R$ a transition takes place and v_o changes to $V_{o1} = +(V_{Z1}+V_D)$. Hence, the threshold value of v_1, called V_1 occurs at $v_1 = V_R$, or from (1)

$$V_R = V_1\frac{R_1}{R_1+R_2} - V_{o2}\frac{R_2}{R_1+R_2}$$

or $V_1 = V_R\left(\frac{R_1+R_2}{R_1}\right) + V_{o2}\left(\frac{R_2}{R_1}\right)$ (2)

If $v_1 > V_R$ then $v_o = V_{o1} = V_{Z1} + V_D$ and by superposition

$$v_1 = v_i \frac{R_1}{R_1+R_2} + V_{o1} \frac{R_2}{R_1+R_2} \qquad (3)$$

If $v_1 \le V_R$ a transition takes place and v_o changes to $-V_{o2}$. Hence, $v_1 = V_2$ occurs at $v_1 = V_R$, or from (3) $V_R = V_2 \frac{R_1}{R_1+R_2} + V_{o1} \frac{R_2}{R_1+R_2}$

or $$V_2 = V_R\left(\frac{R_1+R_2}{R_1}\right) - V_{o1} \frac{R_2}{R_1} \qquad (4)$$

From (2) and (4),

$$V_H = V_1 - V_2 = (V_{o1} + V_{o2}) \frac{R_2}{R_1} \qquad (5)$$

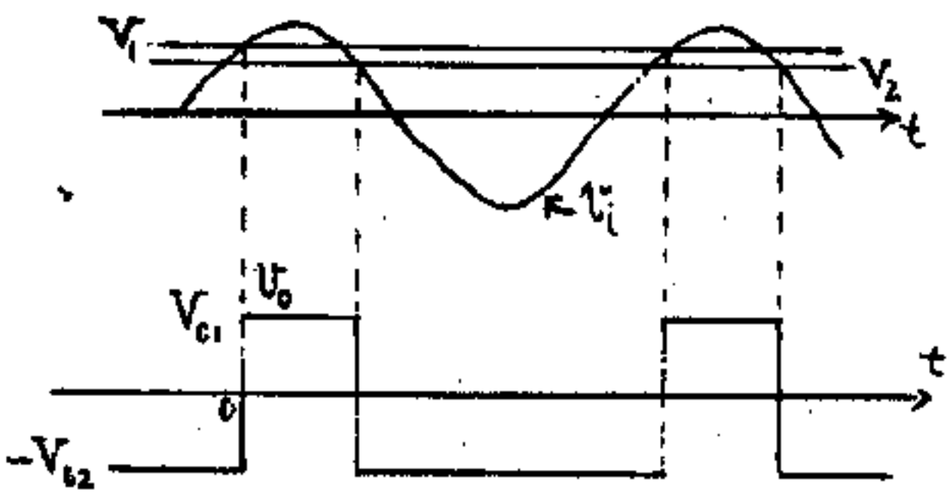

17-7 (a) V_1 is that input voltage v_i which causes v_o to change state from $-V_o$ to $+V_o$ because this is the noninverting connection. This change takes place when the voltage at the noninverting terminal reaches zero as v_i increases. Thus

$$v_i \frac{R_2}{R_1+R_2} - v_o \frac{R_1}{R_1+R_2} = 0$$

or $$V_1 R_2 - V_o R_1 = 0 \qquad \therefore V_1 = \frac{R_1}{R_2} V_o$$

Similarly, V_2 is the value of v_i which causes v_o to change from $+V_o$ to $-V_o$. Hence, proceeding as above

$$V_2 = -\frac{R_1}{R_2} V_o$$

(b)

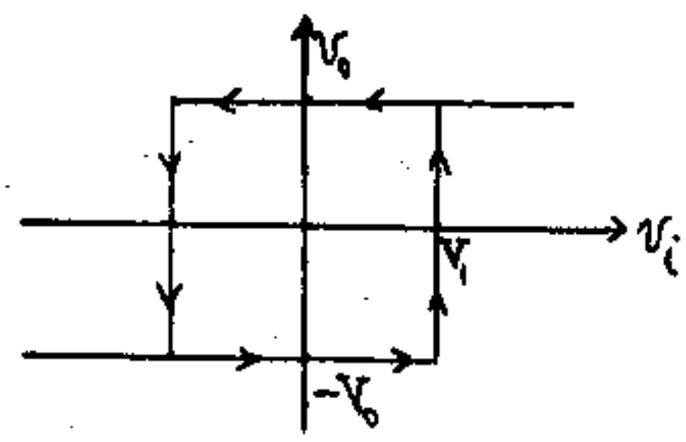

(c) $V_1 = 10 \frac{R_1}{R_2} = \frac{10}{5} = 2\ V = -V_2$

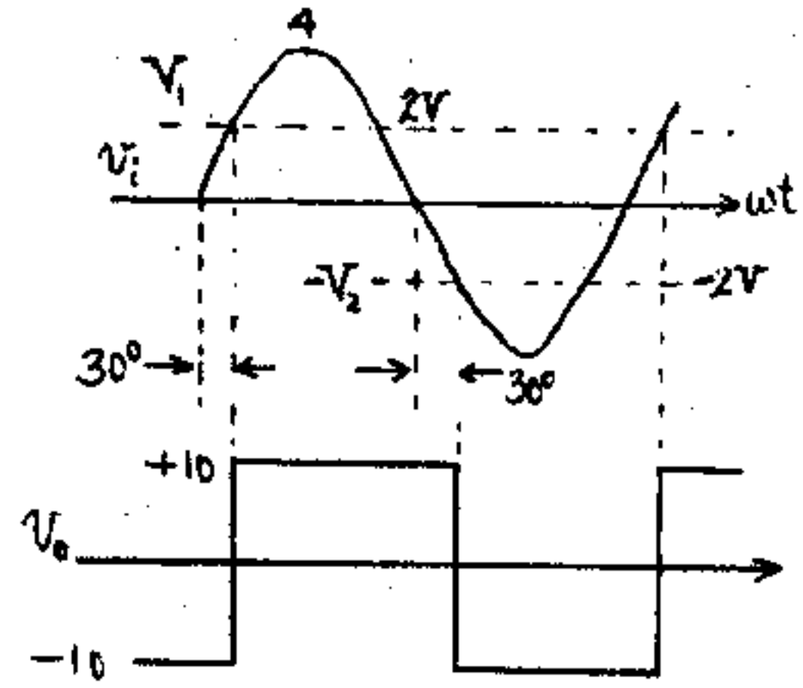

The square wave is symmetrical and delayed $\frac{\pi}{6\omega}$ seconds with respect to the sinewave

17-8 (a) At $t = 0$ $v_c = -\beta V_{o2}$ At $t = \infty$ $v_c = V_{o1}$

An exponential v_c with time constant RC and the above constraints is $v_c = V_{o1} + A\epsilon^{-t/RC}$

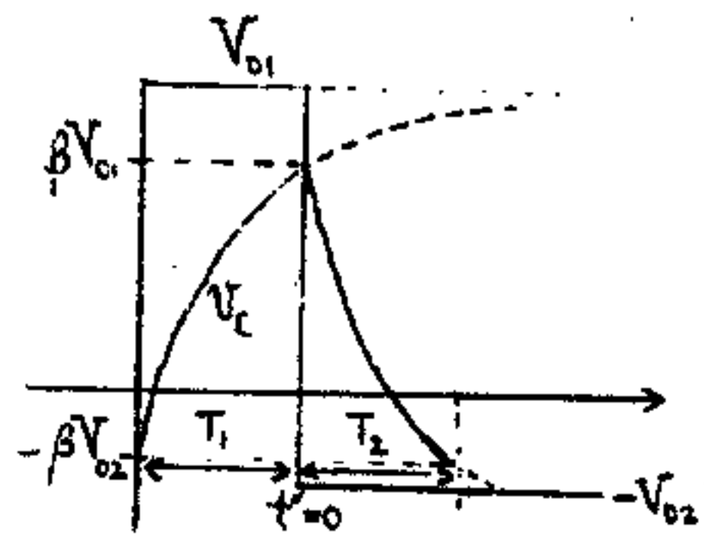

For $t = 0$, $-\beta V_{o2} = V_{o1} + A$ or $A = -(V_{o1} + \beta V_{o2})$

$\therefore v_c = V_{o1} - (V_{o1} + \beta V_{o2})\epsilon^{-t/RC}$

At $t = T_1$ $v_c = +\beta V_{o1}$

$\therefore +\beta V_{o1} = V_{o1} - (V_{o1} + \beta V_{o2})\epsilon^{-T_1/RC}$

$V_{o1} - \beta V_{o1} = (V_{o1} + \beta V_{o2})\epsilon^{-T_1/RC}$

$$T_1 = RC\ \ln \frac{V_{o1} + \beta V_{o2}}{(1-\beta)V_{o1}}$$

(b) If the origin is shifter to $t' = 0$ (at the end of T_1) then at $t' = 0$ $v_c = \beta V_{o1}$ and at $t' = \infty$ $v_c = -V_{o2}$ Hence, the above solution is valid if V_{o1} and $-V_{o2}$ are interchanged. Thus

$$T_2 = RC\ \ln \frac{-V_{o2} - \beta V_{o1}}{(1-\beta)(-V_{o2})} = RC\ \ln \frac{V_{o2} + \beta V_{o1}}{(1-\beta)V_{o2}}$$

(c) $$T_1 = RC\ \ln \frac{1 + \beta \frac{V_{o2}}{V_{o1}}}{1-\beta} \qquad T_2 = RC\ \ln \frac{1 + \beta \frac{V_{o1}}{V_{o2}}}{1-\beta}$$

If $V_{o1} > V_{o2}$ then the numerator of T_1 is less than that of T_2. Hence $T_1 < T_2$.

17-9 (a) For the positive-going ramp $v = -V_o$. The voltage at the left-hand side of R is $-V_o$. Because the two input terminals of an OP AMP are at the same potential then the voltage at the right-hand side of R is $+V_S$. Hence from Eq.(17-11)

$$\frac{dv}{dt} = \frac{-i}{C} = -\frac{(-V_o - V_S)}{RC} = \frac{V_o + V_S}{RC}$$

(b) The derivations of Eqs. (17-8), (17-9), and (17-10) are independent of V_S. Hence, using Eq.(17-10)

$$T_1 = \frac{V_{max} - V_{min}}{|\text{sweep speed}|_1} = \frac{2V_o \frac{R_2}{R_1}}{\frac{V_o + V_S}{RC}} = \frac{2R_2RC}{R_1} \frac{V_o}{V_o + V_S}$$

For the negative ramp change V_o to $-V_o$, so that

$$\frac{dv_o}{dt} = \frac{-V_o + V_S}{RC} = -\left(\frac{V_o - V_S}{RC}\right)$$

$$T_2 = \frac{V_{max} - V_{min}}{|\text{sweep speed}|_2} = \frac{2V_o \frac{R_2}{R_1}}{\frac{V_o - V_S}{RC}} = \frac{2R_2RC}{R_1} \frac{V_o}{V_o - V_S}$$

$$T = T_1 + T_2 = \frac{2R_2RCV_o}{R_1}\left(\frac{1}{V_o + V_S} + \frac{1}{V_o - V_S}\right) = \frac{2R_2RC}{R_1} \frac{2V_o^2}{V_o^2 - V_S^2}$$

$$f = \frac{1}{T_1 + T_2} = \frac{R_1}{4R_2RC}\left[1 - \left(\frac{V_S}{V_o}\right)^2\right]$$

(c) $T_1 = \frac{V_o - V_S}{V_o + V_S} T_2 \qquad T_1 + T_2 = \left(\frac{V_o - V_S}{V_o + V_S} + 1\right) T_2 = \frac{2V_o}{V_o + V_S} T_2$

$$\frac{T_1}{T_1 + T_2} = \frac{V_o - V_S}{2V_o} = \frac{1}{2}\left(1 - \frac{V_S}{V_o}\right)$$

17-10

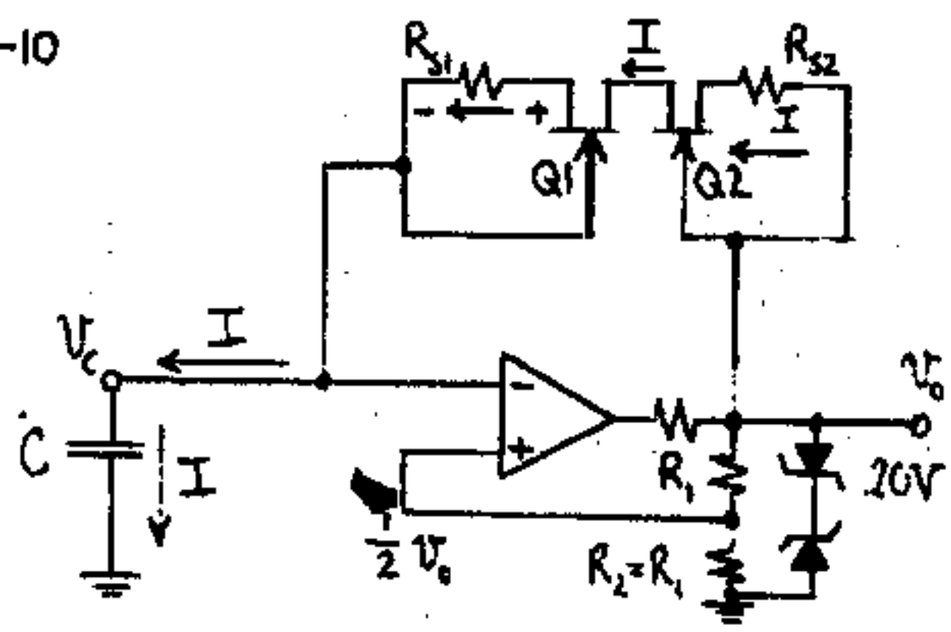

(a) Assume $v_o = +20$ V. Then the capacitor current must flow as indicated; $V_{GS1} = -IR_{S1} = -3R_{S1}$ for R_{S1} in kilohms. If this current went through the channel of Q2 there would be a drop of $+IR_{S2} = +3R_{S2} = V_{GS2}$ and this would forward bias the gate-source junction, whose voltage would be ~0.7V Hence $I = 0.7/R_{s2}$ which cannot be satisfied since I is determined by the JFET characteristics of Q1 and R_{S1}. (R_{S2} determines the discharge current). This argument leads to the conclusion that the current in R_{S1} must be zero and hence I must flow through the Q2 gate-drain junction, which now acts as a forward-biased diode.

(b) From Fig. 8-3 a constant current of 3 mA is obtained from $V_{DS} > 5$ V at $V_{GS1} = -0.8V = -IR_S$. Hence $R_{S1} = 0.8/3 = 0.267$ kΩ $= 267\Omega$.

(c) During discharge Q1 acts as a diode between gate and drain and Q2 as a JFET. From Fig. 8-3 at $I_{D2} = 1$ mA $V_{GS2} \approx -2$ V. Hence

$R_{S2} = 2/1 = 2$ kΩ

(d) The sweep speed is I/C

$\therefore \frac{I_1T_1}{C}$ = the sweep amplitude = 20 V

and $\frac{I_2T_2}{C} = 20$

$3T_1 = 1T_2$

$$T = T_1 + T_2 = 4T_1 = \frac{4 \times 20C}{I_1}$$

$$10^{-3} = \frac{80\ C}{3 \times 10^{-3}}$$

$$C = \frac{3}{80}\ \mu F = 0.0375\ \mu F$$

(e)

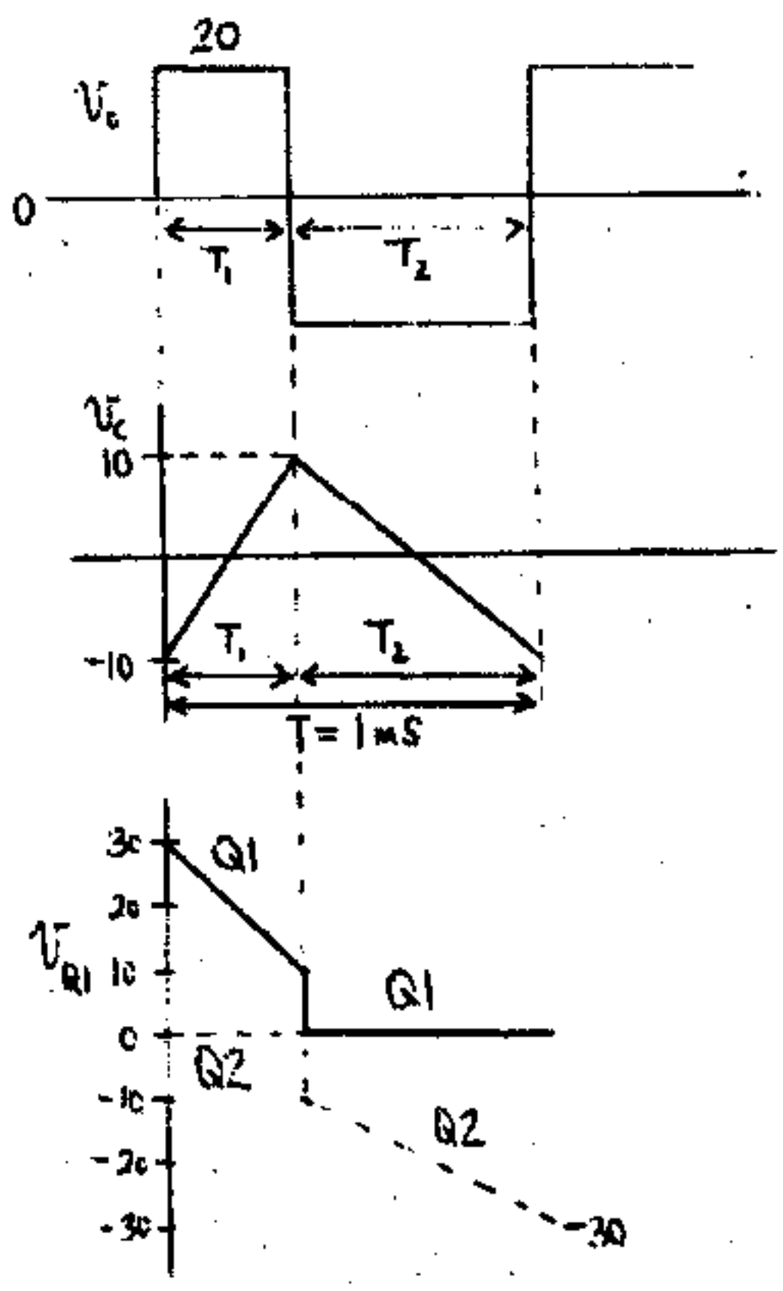

17-11

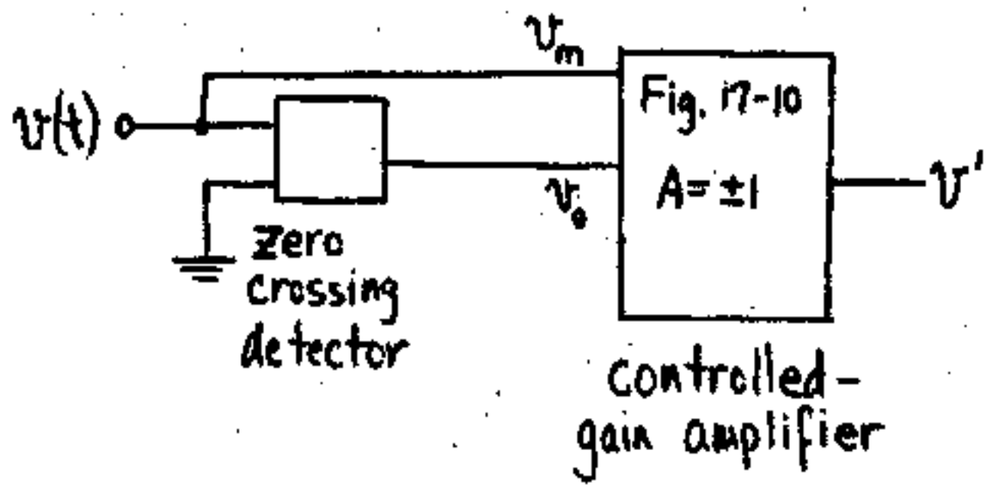

Assume that the zero-crossing detector is such that when $v > 0$ ($v < 0$) its output v_o is $-V_o$ ($+V_o$). When $v > 0$ then $v_o = -V_o$, $A = 1$ and $v' = v_m > 0$. When $v < 0$ then $v_o = V_o$, $A = -1$ and $v' = -v_m = -v > 0$. Hence v' is the absolute value of $v(t)$.

17-12 $v_c = A + Be^{-t/RC}$ (see Fig. 17-11b.)

At $t = \infty$ $v_c \to -V_o$. Hence $A = -V_o$ and

$v_c = -V_o + Be^{-t/RC}$ At $t = 0$ $v_c = V_1$

or $B = V_1 + V_o$

$v_c = -V_o + (V_o + V_1)e^{-t/RC}$ At $t = T$

$v_c = -\beta V_o = -V_o + (V_o + V_1)e^{-T/RC}$

$$T = RC \ln \frac{V_o + V_1}{V_o - \beta V_o} = RC \ln \frac{1 + V_1/V_o}{1 - \beta}$$

17-13 (a) Refer to the problem figure. In the quiescent state, $v_2 = -V_R$ and the comparator is at its high level $v_o = V_o = V_Z + V_D$. There is no steady-state current in the capacitor. Hence, the drop in R is zero and $v_1 = 0$. The voltage across C is V_o.

(b) At $t = 0$ a narrow triggering pulse of magnitude greater than V_R causes v_2 to exceed OV and the comparator is triggered to its low state, $v_o = -V_o$. Since the voltage on a capacitor can not change instantaneously then the change $\Delta v_o = -2V_o$ is transmitted to v_1. Hence v_1 falls from 0 to $-2V_o$ as indicated. The diode is OFF.

The capacitor voltage v_c now varies exponentially with a time constant $\tau = RC$ from its initial voltage $v_c = V_o$ toward its final value $-V_o$. Hence v_1 varies with the same τ from $-2V_o$ toward 0. When $v_1 = v_2 = -V_R$ then the comparator again changes state to $v_o = +V_o$, thus generating a pulse of width T.

(c) At $t = T+$, $\Delta v_o = +2V_o$ and hence $\Delta v_1 = 2V_o$ as shown. Now D1 is <u>ON</u> and the recovery time constant is $\tau_r = R_f C$ where $R_f \ll R$ is the small diode forward resistance

(d) $v_1 = -2V_o e^{-t/\tau}$ and $t = T$ when $v_1 = -V_R$

$-V_R = -2V_o e^{-T/\tau}$

$$T = RC \ln \frac{2V_o}{V_R}$$

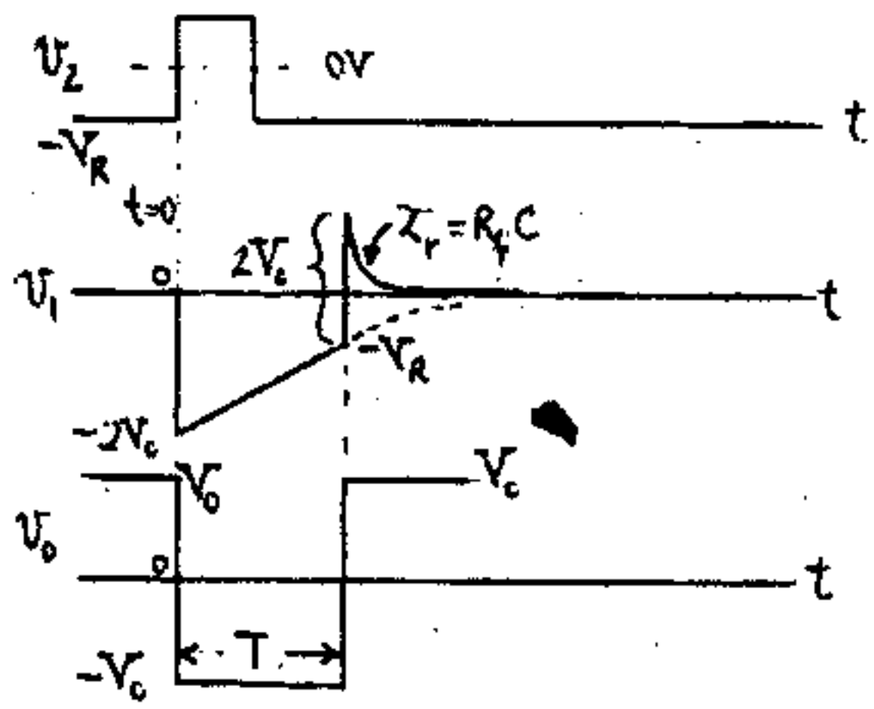

17-14 (a) When $v_o = -V_o$ the diode D is cut off and the capacitor current is V/R so that the sweep speed is V/RC. When $v_o = +V_o$, D is ON and the capacitor current is

$$\frac{-V_o}{R'} + \frac{V}{R} \approx \frac{-V_o}{R'} \quad \text{because } R' \ll R$$

Hence, the sweep speed is $-V_o/R'C \gg \frac{V}{RC}$ and the retrace time T_r is very short

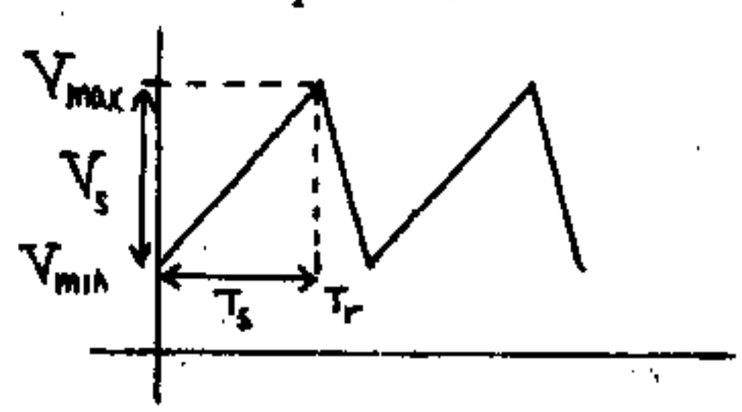

(b) Proceeding as in Sec. 17-4 we obtain Eqs. (17-8), (17-9) and (17-10). From Eq. (17-9) with $V_{min} = 0$ we obtain

$$0 = V_R \frac{R_1 + R_2}{R_1} - V_o \frac{R_2}{R_1} \quad \text{or} \quad V_R = V_o \frac{R_2}{R_1 + R_2}$$

$$V_s = V_{max} - V_{min} = 2V_o R_2/R_1$$

(c) $$T_s = \frac{V_s}{\text{sweep speed}} = \frac{V_s RC}{V}$$

(d) If $-V$ is made a time varying negative modulating voltage $-v_m$, then $T_s = \frac{V_s RC}{v_m}$

Since $T_r \ll T_s$ then the frequency is

$$f = \frac{1}{T_s} = \frac{v_m}{V_s RC}$$

Since f is proportional to v_m then this is a case of frequency modulation.

17-15 (a) $v = V(1-\epsilon^{-t/\tau})$

$$\frac{dv}{dt} = V\epsilon^{-t/\tau} \qquad \left.\frac{dv}{dt}\right|_0 = V \qquad \left.\frac{dv}{dt}\right|_{T_s} = V\epsilon^{-T_s/\tau}$$

From the definition in Eq. (17-21)

$$e_s = \frac{V - V\epsilon^{-T_s/\tau}}{V} = \frac{V(1-\epsilon^{-T_s/\tau})}{V} = \frac{V_s}{V}$$

(b) Using Thevenin's theorem we obtain

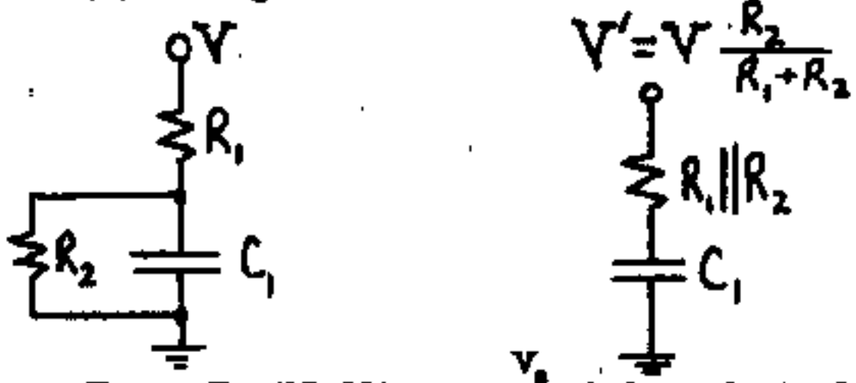

From Eq. (17-22) $e_s = \frac{V_s}{V'}$ independent of the time constant. Hence, now $e_s = \frac{V_s}{V\frac{R_2}{R_1+R_2}} = \frac{V_s}{V}\,\frac{R_1+R_2}{R_2}$

17-16 (a)

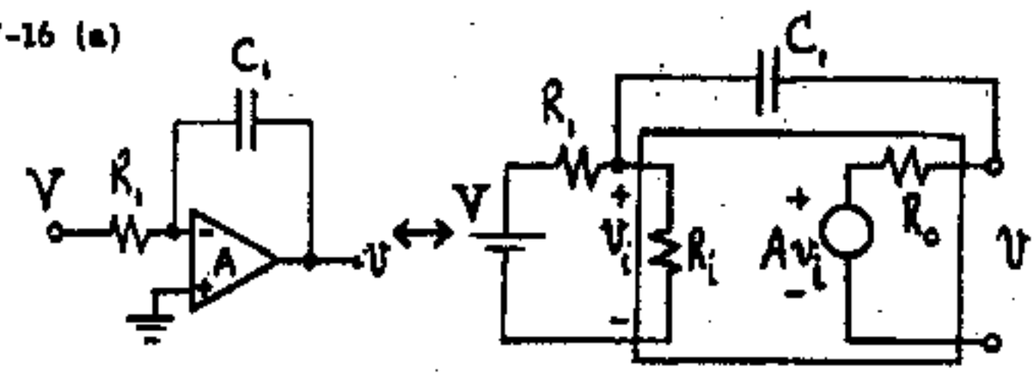

(b) Using Miller's theorem, Fig. C-16

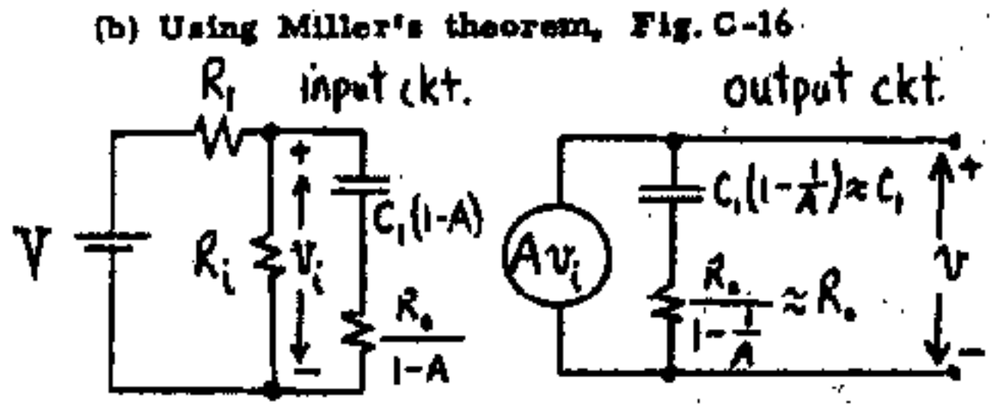

(c) Applying Thevenin's theorem to the input circuit gives

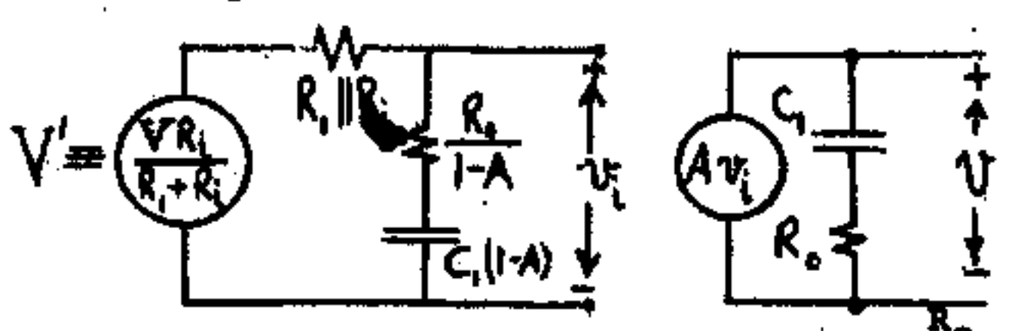

Since $A \gg 1$ and R_o is a few ohms then $\frac{R_o}{1-A} \ll R_1 \| R_i$. Hence v_i is the voltage across $C_1(1-A)$. When $v = V_s$ then $v_i = V_s/A$ across $C_1(1-A)$. Since Eq. (17-22) is independent of the time constant then

$$e_s = \frac{V_s/A}{V'} = \frac{V_s}{AV}\,\frac{R_1+R_i}{R_i}$$

17-17 (a) Because of the virtual ground at the input to A in Fig. 17-15c the current in R_1 is V/R_1. Because the OP AMP takes no input current then V/R_1 is the current charging C_1 and the sweep speed is V/R_1C_1. Hence

$$V_s = \frac{VT_s}{R_1C_1} \quad \text{or} \quad C_1 = \frac{VT_s}{V_sR_1} = \frac{45 \times 5}{25 \times 10^6}\,F = \underline{9\ \mu F}$$

(b) From Eq. (17-23)

$$e_s = \frac{V_s}{AV} = \frac{25 \times 100}{50{,}000 \times 45}\,\% = \frac{1}{900}\,\% = \underline{0.0011\ \%}$$

(c) C_1 is proportional to T_s. Hence from part (a) $C_1 = 9\ \mu\mu F = \underline{9\ pF}$

Since the slope error does not depend on the value of C_1 then from (b), $e_s = \underline{0.0011\ \%}$

(d) The value of $C_1 = 9$ pF in part C is impractically small since it is the same order of magnitude as the switch capacitance and stray wiring capacitances. A much larger value of C_1 may be obtained if R is reduced. If R is changed from 1 M to 10 kΩ (a factor of 100) then C_1 is multiplied by this same factor, or C = 900 pF.

17-18 (a) From Eq. (17-20) with $T_s = 100\ \mu s$, $V = 30$ V, and $v = V_s = 10$ V, and with C_1 in μF,

$$10 = 30(1-\epsilon^{-\frac{100}{105\,C_1}})$$

$$30\,\epsilon^{-x} = 20 \qquad x = \ln 1.5 = \frac{1}{10^3 C_1} = 0.405$$

$$C_1 = 2.469 \times 10^{-3}\,\mu F = \underline{0.00247\ \mu F}$$

(b)

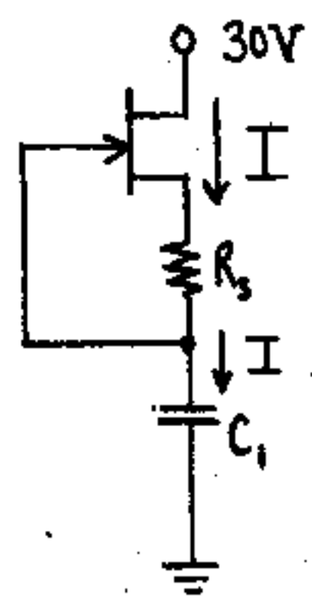

From Fig. 8-3, I = 1 mA for $V_{GS} = -2$ V if $V_{DS} > 5$ V. $V_{GS} = -IR_s = -2$

$$R_s = +\frac{2}{1} = \underline{2\ k\Omega}$$

(c) The voltage across C_1 is $v = \frac{It}{C_1}$ and at the end of the pulse width T_s

$v = V_s = \frac{IT_s}{C_1}$ so that V_s is proportional to T_s

For $T_s = 100\ \mu s$, $V_s = \frac{10^{-3} \times 100 \times 10^{-6}}{.005 \times 10^{-6}} = \underline{20\ V}$

(d) From Fig. 8-3, the JFET delivers constant current only if V_{DS} exceeds about 5 V. Hence, the maximum $V_s = 30 - V_{DS} - IR_S = 30-5-2 = 23$

$\therefore T_s = \frac{C_1 V_s}{I} = \frac{0.005 \times 23}{10^{-3}} = \underline{115\ \mu s}$

17-19 (a) With S closed and with $R_o = 0$ and $V_D = 0$ the voltage across C_1 is V and the voltage across R is V.

With S open and the voltage across C equal to v_c then $v_o = v_c$ because the <u>OP AMP</u> is connected as a voltage follower. Since C_1 is arbitrarily large then the change in voltage across it is $\Delta Q/C_1 = 0$ where ΔQ is the charge delivered to C_1. Hence, the top of the resistor is at a voltage $v_c + V$ with respect to ground. The diode is reverse biased by $-v_c$ and is OFF. The bottom of R is at a voltage v_c with respect to ground. Hence, the drop across R is $v_c + V - v_c = V = \text{const}$. Note that the top of R has risen by the same voltage as the bottom of R. Hence, R has pulled itself up by its "bootstraps", which accounts for the name <u>bootstrap sweep</u>.

Since the voltage across R is V, the current is $\frac{V}{R}$ and the sweep speed is $I/C = V/RC$. Hence $v_c = Vt/RC$, a precisely linear sweep.

(b) Since $v_{o2} = -v_{o1}$ then A_2 is an inverter. Hence <u>$R''/R = 1$</u>

When the voltage across C is v_c and if the gain of the two OP AMPS in cascade is K then point P rises to $Kv_c + V$. The current in the sweep R is

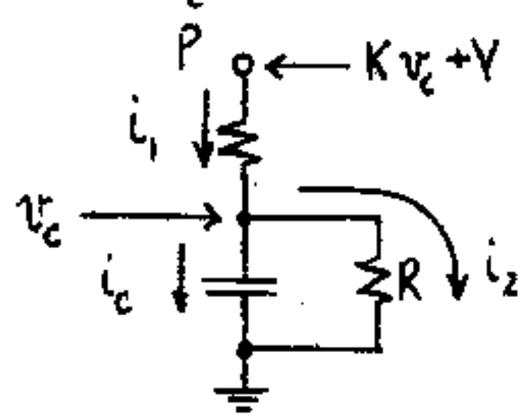

$i_1 = \frac{Kv_c + V - v_c}{R}$; $i_2 = \frac{v_c}{R}$

$i_c = i_1 - i_2 = \frac{(K-2)v_c + V}{R}$

In order to have a linear sweep, i_c must be constant, independent of v_c. Hence $K = 2$

$\therefore \frac{R'}{R} = 2$ so that $K = (-\frac{R'}{R})(-\frac{R''}{R}) = 2$

17-20 (a) If S_1 is controlled by $+v_o$ in Fig. 17-19b then the output is zero if $v_o > 0$ and is v_m if $v_o < 0$. Hence, v_+ is as indicated below.

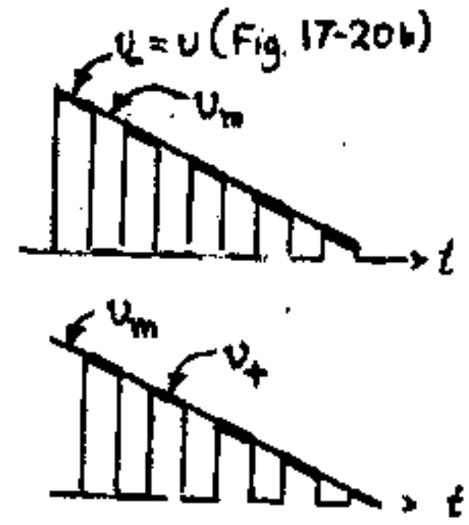

(b) To obtain v' of Fig. 17-9c we must subtract v_+ from v_-.

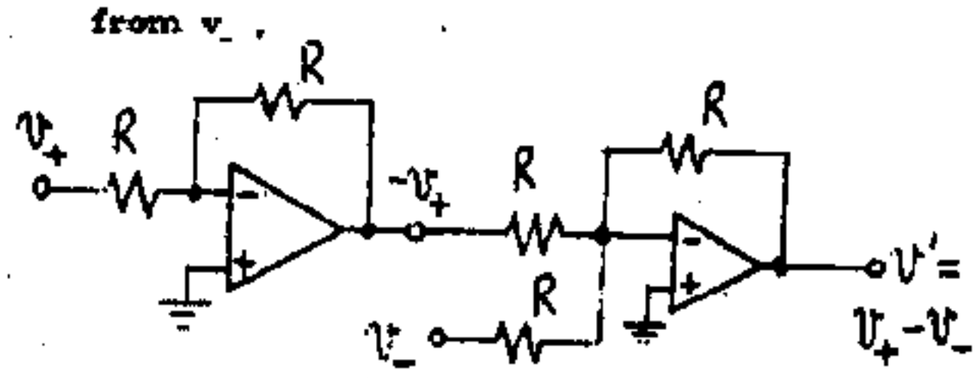

17-21 $v_1 = -(v_m \sin \omega t + V_m)$

when $v_o > 0$, $-v_o < 0$ and S is open so that $v_2 = v_1$.

when $v_o < 0$, $-v_o > 0$ and S is closed so that $v_2 = 0$.

The waveforms are indicated below.

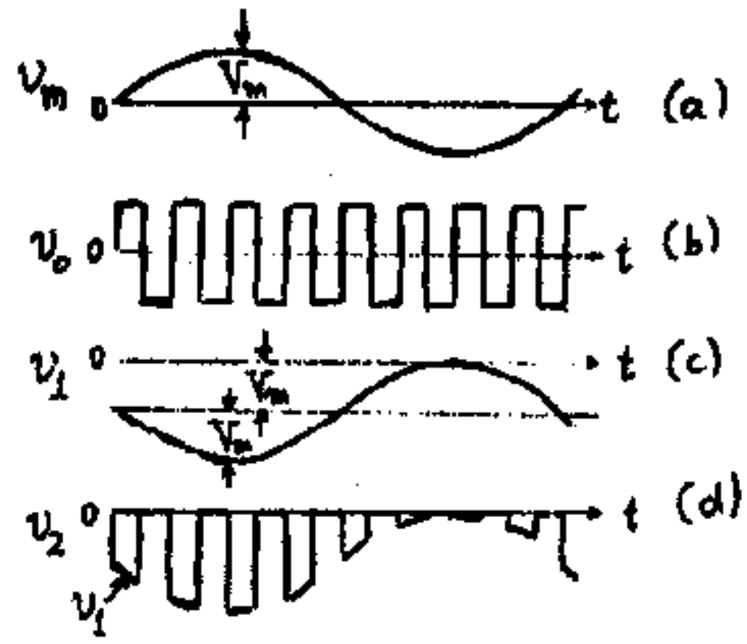

17-22 Let $X = \frac{1}{\omega C}$. Then, using mesh analysis, we have:

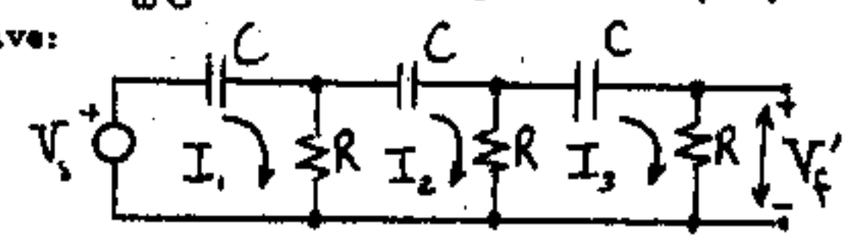

$V_o = I_1(R-jX) - I_2R + I_3(0)$

$0 = -I_1R + I_2(2R-jX) - I_3R$

$0 = I_1(0) - I_2R + I_3(2R-jX);$

I_3 is found from $I_3 = \Delta_3/\Delta$ where $\alpha = \frac{X}{R} = \frac{1}{\omega RC}$

$$\Delta = \begin{vmatrix} R-jX & -R & 0 \\ -R & 2R-jX & -R \\ 0 & -R & 2R-jX \end{vmatrix} = R^3 \begin{vmatrix} 1-j\alpha & -1 & 0 \\ -1 & 2-j\alpha & -1 \\ 0 & -1 & 2-j\alpha \end{vmatrix} =$$

$$R^3[(1-j\alpha)(2-j\alpha)^2 - (1-j\alpha) - (2-j\alpha)] = R^3[1-5\alpha^2 + j(\alpha^3 - 6\alpha)]$$

$$\Delta_3 = \begin{vmatrix} R-jX & -R & V_o \\ -R & 2R-jX & 0 \\ 0 & -R & 0 \end{vmatrix} = R^2 V_o$$

$$\therefore\ I_3 = \frac{\Delta_3}{\Delta} = \frac{R^2 V_o}{R^3[1-5\alpha^2 + j(\alpha^3 - 6\alpha)]}$$

Hence, $-\beta = \frac{V_i}{V_o} = \frac{I_3 R}{V_o} = \frac{1}{1-5\alpha^2 + j(\alpha^3 - 6\alpha)}$ Eq. (17-27)

For 180° phase shift, $\alpha^3 - 6\alpha = 0$ or $\alpha^2 = 6$ and

$$\beta = \frac{-1}{1-5\alpha^2} = \frac{-1}{1-30} = +\frac{1}{29}$$

17-23 (a) From the mesh equations derived in Prob. 17-22

$I_1 = \frac{\Delta_1}{\Delta}$ where

$$\Delta_1 = \begin{vmatrix} V_o & -R & 0 \\ 0 & 2R-jX & -R \\ 0 & -R & 2R-jX \end{vmatrix} = V_o[(2R-jX)^2 - R^2] =$$

$$= V_o R^2(3-\alpha^2 - j4\alpha)$$

$$\therefore\ Z_i = \frac{V_o}{I_1} = \frac{V_o\Delta}{\Delta_1} = R\left[\frac{1-5\alpha^2 + j(\alpha^3 - 6\alpha)}{3-\alpha^2 - j4\alpha}\right]$$

(b) For $\alpha = \sqrt{6}$, $Z_i = R\left[\frac{1-5\times 6 + j(6\sqrt{6} - 6\sqrt{6})}{3-6-j4\sqrt{6}}\right] = R\frac{-29}{-3-j4\sqrt{6}} =$

$= R(0.83 - j2.7)$

17-24 (a)

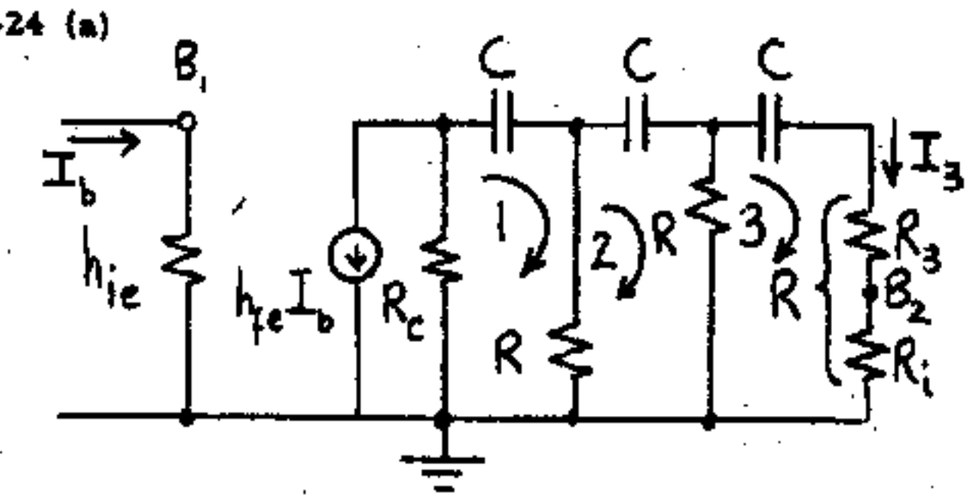

(b) Replace the dependent current source by its Thevenin's equivalent, and write the mesh equations

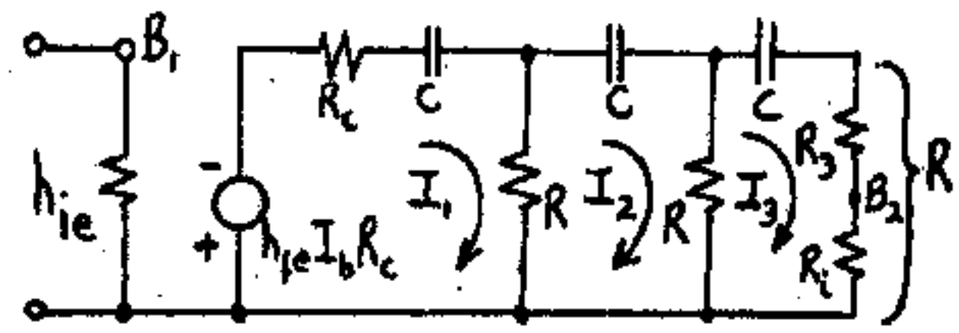

(1) $-h_{fe}I_bR_c = I_1(R_c + R - jX) - I_2R + I_3(0)$

(2) $0 = -I_1R + I_2(2R-jX) - I_3R$

(3) $0 = I_1(0) - I_2R + I_3(2R-jX)$; Let $\alpha = \frac{X}{R} = \frac{1}{\omega RC}$ and

$k = \frac{R_c}{R}$. Then (3) becomes, $I_2 = I_3(2-j\alpha)$ and (2) becomes, $I_1 = I_3(3-\alpha^2 - j4\alpha)$. Substituting the expressions of I_1 and I_2 in (1) and simplifying we get:

$$-h_{fe}I_bk = I_3\{1+3k-(5+k)\alpha^2 - j[(6+4k)\alpha - \alpha^3]\}$$

The loop current gain is I_3/I_b and if this is to be real, then the coefficient of j must be zero or

$$\alpha^2 = 6+4k = \frac{1}{\omega^2R^2C^2}$$

Thus, $f = \frac{1}{2\pi RC}\cdot\frac{1}{\sqrt{6+4k}}$. At this frequency

$\frac{I_b}{I_3} = +\frac{1}{h_{fe}k}(4k^2+23k+29)$; For $\frac{I_3}{I_b} > 1$ then

$$h_{fe} > 4k + 23 + \frac{29}{k}$$

(c) $h_{fe} = 4k+23+29/k$. Thus

$dh_{fe}/dk = 4 - 29/k^2 = 0$, or $k = (29/4)^{1/2} = 2.7$.

Thus $h_{fe(min)} = (4)(2.7) + 23 + 29/2.7 = 44.5$

17-25 (a) $|A| = \frac{\mu R_d}{r_d + R_d} = 29$ or $R_d = \frac{29r_d}{\mu - 29}$. For example:

$\mu = 55$ and $r_d = 5.5\ k\Omega$ $\therefore R_d = \frac{29\times 5.5\,k\Omega}{55-29} = \underline{6.13\ k\Omega}$

(b) $\alpha = \frac{1}{2\pi fRC} = \sqrt{6}$ or $RC = 1/(2\pi\times 5\times 10^3\sqrt{6}) = \underline{12.99\ \mu s}$

(c) In order not to load down the amplifier, the input impedance of the phase shift network must be high compared to the output impedance of the amplifier. If R is chosen too large, however, C will be impractically small, e.g. if R = 1 M, C=12.9 pF which is of the same order of magnitude as stray wiring capacitance. If we choose this FET, the amplifier output impedance is

$\frac{r_dR_d}{r_d+R_d} = \frac{5.5\times 6.12}{5.5+6.12} = 2.9\ k\Omega$. If we choose R to be, say, 10 times this value, or $\underline{30\ k\Omega}$, then the load of the phase shift network will be negligible. Then

$C = \frac{12.9\times 10^{-6}}{\ldots} = 430\ pF$

(a) Let $X = \frac{1}{\omega C}$. Then

$$V_o = I_1(R-jX) - I_2(-jX)$$

$$0 = -I_1(-jX) + I_2(R-j2X)$$

$$I_1 = \left(\frac{R-j2X}{-jX}\right) I_2 = \left(2+j\frac{R}{X}\right) I_2$$

$$\text{so} \quad V_o = I_2\left[(R-jX)\left(2+j\frac{R}{X}\right)+jX\right] = I_2\left[3R+j\left(\frac{R^2}{X}-X\right)\right]$$

$$\frac{V_f'}{V_o} = \frac{I_2 R}{V_o} = \frac{R}{3R+j\left(\frac{R^2}{X}-X\right)} = \frac{1}{3+j\left(\frac{R}{X}-\frac{X}{R}\right)} = \frac{1}{3+j\left(\omega RC-\frac{1}{\omega RC}\right)}$$

(b) $\beta = -\frac{V_f'}{V_o}$ and $-A\beta \geq 1$ is $\frac{A}{3+j\left(\omega RC-\frac{1}{\omega RC}\right)} \geq 1$

Hence $\omega RC = \frac{1}{\omega RC}$ or $\omega CR = 1$, $f = \frac{1}{2\pi RC}$ and $\frac{A}{3} \geq 1$, $A > 3$

(c) Since A must be positive then we must use a noninverting OP AMP as for the Wien Bridge oscillator of Fig. 17-28. Thus,

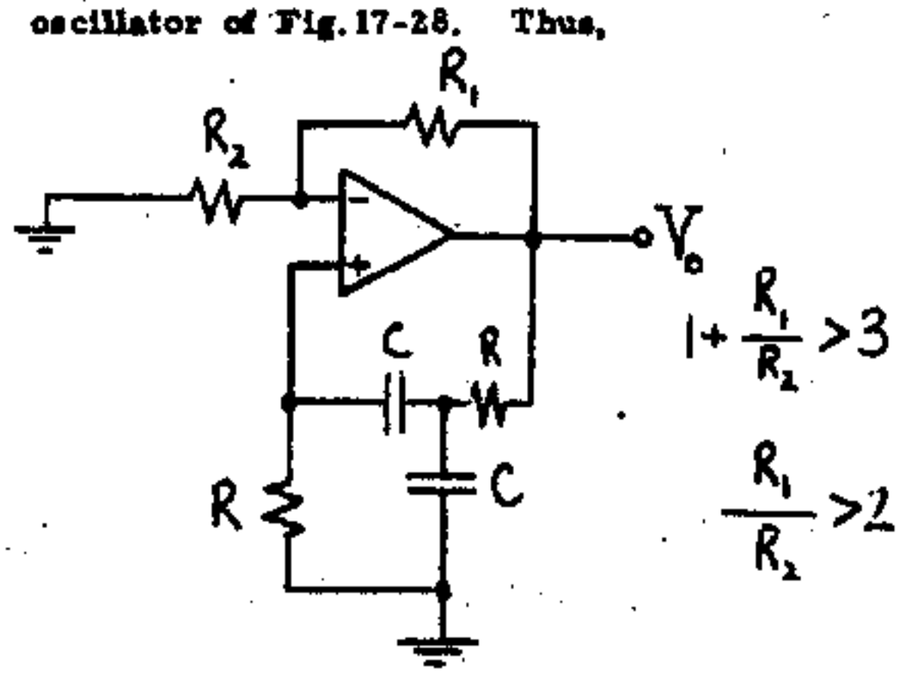

17-30 The negative gain is -1 and the positive gain is

$$\frac{X}{R+X}\left(1+\frac{R_1}{R_1}\right) = \frac{2X}{R+X} \quad \text{where } X = \frac{1}{j\omega C}$$

$$\therefore \quad \frac{V_o}{V_i} = -1 + \frac{2X}{R+X} = \frac{-R+X}{R+X} = \frac{-R+\frac{1}{j\omega C}}{R+\frac{1}{j\omega C}} = \frac{1-j\omega CR}{1+j\omega CR}$$

$$\left|\frac{V_o}{V_i}\right| = \frac{\sqrt{1+\omega^2C^2R^2}}{\sqrt{1+\omega^2C^2R^2}} = 1 \qquad \phi = -\arctan \omega CR - \arctan \omega CR$$

$$= -2 \arctan \omega CR$$

(b)

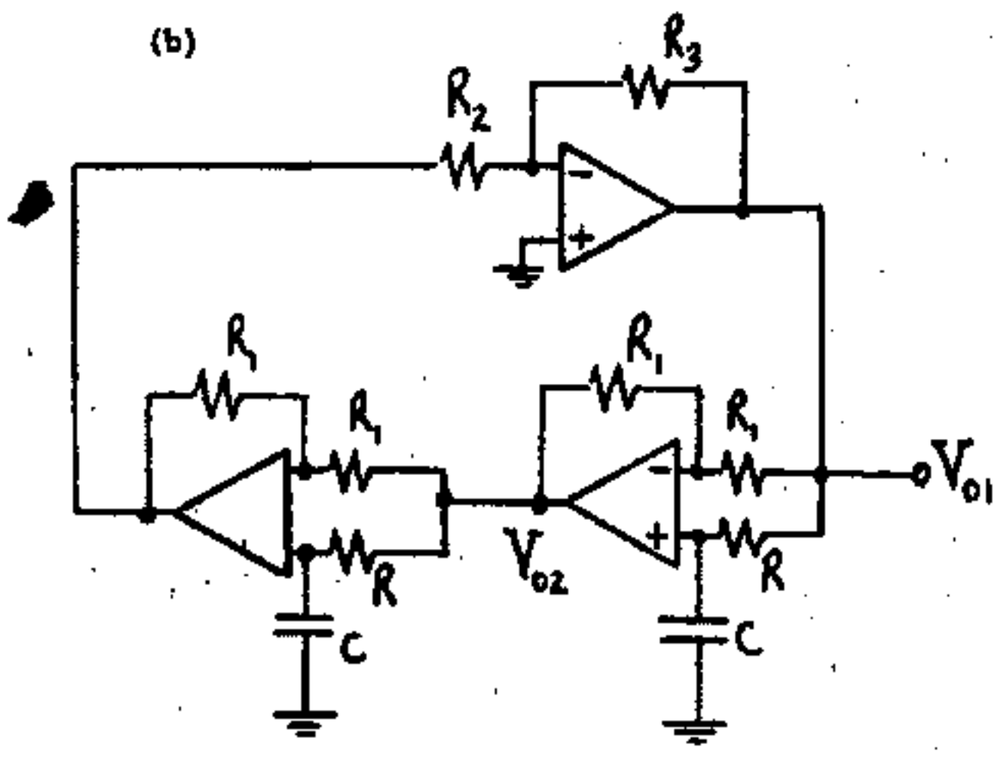

There is 180 deg phase shift in the inverting OP AMP. Hence for the loop gain to equal 1+jo there must be 180 deg shift through the two phase shifters or 90 deg through each. Hence $2 \arctan \omega RC = \frac{\pi}{2}$ or $\omega RC = 1$ or $f = \frac{1}{2\pi RC}$. Since the gain in each phase shifter is 1 then the gain in the OP AMP must exceed unity or $\frac{R_1}{R_2} > 1$.

(c) Since the phase shift is 90° in each phase shifter then if V_{o1} is a sinusoid then V_{o2} is a sinusoid of the same amplitude shifted by 90 deg.

17-31

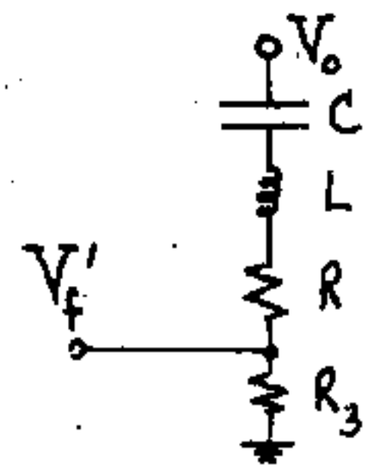

$$\beta = \frac{-V_f'}{V_o} = \frac{-R_3}{R_3+R+j\left(\omega L-\frac{1}{\omega C}\right)}$$

$$A = 1 + \frac{R_1}{R_2}$$

Since $-\beta A = 1$ then β must be real

$$\text{or } \omega L = \frac{1}{\omega C} \qquad f = \frac{1}{2\pi\sqrt{LC}}$$

at resonance

$$-\beta A = \left(\frac{R_3}{R_3+R}\right)\left(1+\frac{R_1}{R_2}\right) \geq 1$$

$$\therefore \left(\frac{R_1}{R_2}\right)_{min} = \frac{R_3+R}{R_3} - 1 = \frac{R}{R_3}$$

17-32 In order for the loop gain to be real (equal to unity) the capacitive reactance must cancel the inductive reactance. Hence, $\omega L = \frac{1}{\omega C}$

$$f = \frac{1}{2\pi\sqrt{LC}} = \frac{1}{2\pi\sqrt{10^{-8}\times 10\times 10^{-3}}} = \frac{10^5}{2\pi} = 1.592\times 10^4 \text{ Hz}$$

$$= \underline{15.92 \text{ kHz}}$$

At the resonant frequency the parallel resistance of L and C is very large compared with R<10 kΩ. If we break the loop at the noninverting terminal the amplifier gain is A and the gain $(1+j\omega/s) = 21$ from the output back to the + input is $\frac{R}{10}$. Hence the loop gain is

$$21 \times \frac{R}{10} > 1 \quad \text{or} \quad R > \frac{1}{2.1} \text{ k}\Omega = \underline{476\ \Omega}$$

17-33 (a) $X = \frac{(\omega L - 1/\omega C)(-1/\omega C')}{\omega L - 1/\omega C - 1/\omega C'} = \frac{(\omega^2 - 1/LC)(-1/\omega C')}{\omega^2 - \frac{1}{L}(\frac{1}{C} + \frac{1}{C'})} =$

$$= -\frac{1}{\omega C'} \frac{\omega^2 - \omega_s^2}{\omega^2 - \omega_p^2}$$

where $\omega_s^2 = \frac{1}{LC}$ and $\omega_p^2 = \frac{1}{L}(\frac{1}{C} + \frac{1}{C'})$

(b) $\frac{\omega_p}{\omega_s} = [\frac{1}{L}(\frac{1}{C} + \frac{1}{C'})/(\frac{1}{LC})]^{\frac{1}{2}} =$

$$= (1 + \frac{C}{C'})^{\frac{1}{2}} \approx 1 + \frac{1}{2}\frac{C}{C'} + \ldots$$

(c) If $C = 0.04$ pF and $C' = 2$pF, then $\frac{1}{2}\frac{C}{C'} \times 100\% =$

$= \frac{1}{2}\frac{0.04}{2.00} \times 100 = 1\%$

CHAPTER 18

18-1 (a) Eq. (18-6) with $i_b = I_1 \cos\omega_1 t + I_2 \cos\omega_2 t$ becomes:

$$i_c = G_1 i_b + G_2 i_b^2 = G_1 I_1 \cos\omega_1 t + G_1 I_2 \cos\omega_2 t$$

$$+ G_2 I_1^2 \cos^2\omega_1 t + G_2 I_2^2 \cos^2\omega_2 + 2G_2 I_1 I_2 \cos\omega_1 t \cos\omega_2 t$$

Note that since $2\cos^2\alpha = 1 + \cos 2\alpha$ and $2\cos\alpha\cos\beta = \cos(\alpha-\beta) + \cos(\alpha+\beta)$, then i_c contains terms whose frequencies are $\omega_1, \omega_2, 2\omega_1, 2\omega_2, (\omega_1 - \omega_2)$, $(\omega_1 + \omega_2)$.

(b) Assume that i_c contains the term $G_3 i_b^3 =$

$= G_3(I_1^3 \cos^3\omega_1 t + 3I_1^2 I_2 \cos^2\omega_1 t \cos\omega_2 t +$

$+ 3I_1 I_2^2 \cos\omega_1 t \cos^2\omega_2 t + I_2^3 \cos^3\omega_2 t)$. Now, since

$4\cos^3\alpha = \cos 3\alpha + 3\cos\alpha$ and

$4\cos^2\alpha\cos\beta = 2(1 + \cos 2\alpha)\cos\beta = 2\cos\beta + 2\cos 2\alpha\cos\beta$

$= 2\cos\beta + \cos(2\alpha+\beta) + \cos(2\alpha-\beta)$, then i_c contains, in in addition to the frequencies listed in (a) above, $3\omega_1, 3\omega_2, (2\omega_1 \pm \omega_2)$, and $(2\omega_2 \pm \omega_1)$.

If i_c also contains i_b^4 $\omega_1 t$ (yields $4\omega_1$),

$\cos^3\omega_1 t \cos\omega_2 t$ (yields $3\omega_1 \pm \omega_2$),

$\cos^2\omega_1 t \cos^2\omega_2 t$ (yields $2\omega_1 \pm 2\omega_2$), etc.

18-2 From Eq. (18-18) $P = \frac{1}{2} B_1^2 R_L$

$$B_1 = (\frac{2 \times 2}{4000})^{1/2} = \frac{1}{(1000)^{1/2}} \text{ A} = 31.62 \text{ mA}$$

$I_C = 35$ mA and from Eq. (18-15) $I_C + B_o = 39$.

Hence $B_o = 39 - 35 = 4$ mA $= B_2$, from Eq. (18-15),

$$D_2 = \left|\frac{B_2}{B_1}\right| \times 100 = \frac{400}{31.62} = \underline{12.65\ \%}$$

18-3 From Eq. (18-15), $i_c = G_1 i_b + G_2 i_b^2 + G_3 i_b^3 + \ldots$

$= G_1 I_{bm} \sin\omega t + G_2 I_{bm}^2 \sin^2\omega t + G_3 I_{bm}^3 \sin^3\omega t + \ldots$

Since $\sin^2\alpha = \frac{1}{2}(1 - \cos^2\alpha)$; $\sin^3\alpha = \frac{1}{4}(3\sin\alpha - \sin 3\alpha)$; $\sin^4\alpha = \frac{1}{8}(\cos 4\alpha - 4\cos 2\alpha + 3)$, etc., it follows that i_c contains sine terms with only odd frequencies and cosine terms with even frequencies.

18-4 (a) $I_{min} = 0$ and $B_2 = 0$. From Eq. (18-13)

$$B_2 = \frac{1}{4}(I_{max} + I_{min} - 2I_C) = 0$$

Hence, $I_{max} = 2I_C$. From the figure, $I_m = I_C$ and $V_m = \frac{1}{2}(V_{CC} - V_{min})$

From Eq. (18-23), $\eta = \frac{I_m V_m}{2V_{CC} I_C} = \frac{V_m}{2V_{CC}} = \frac{1}{4}(\frac{V_{CC} - V_{min}}{V_{CC}})$

$$\eta = 25\left(\frac{V_{CC}-V_{min}}{V_{CC}}\right) \text{ percent}$$

(b) If $V_{min} \ll V_{CC}$, then $\eta \to 25$ percent. In other words, if $V_{CE(sat)} \ll V_{CC}$, then $\eta_{max} = 25$ percent.

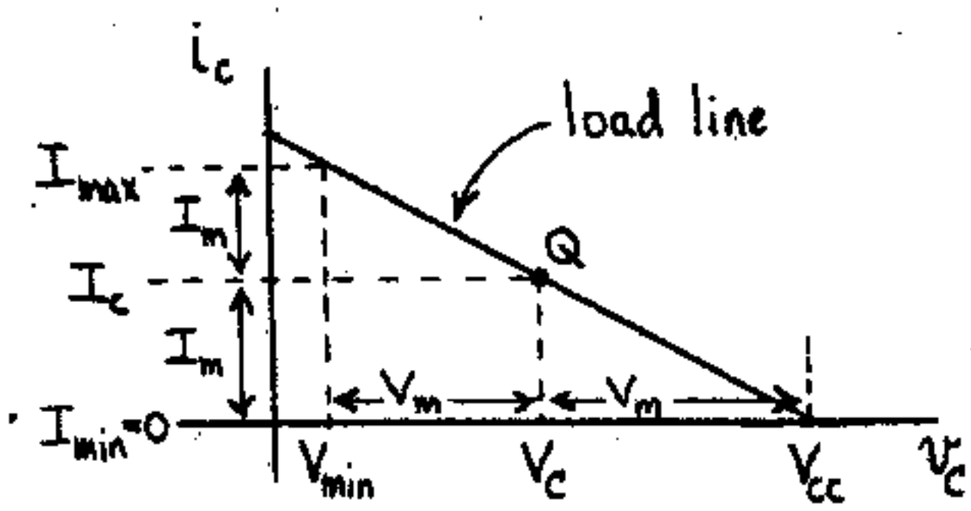

18-5 From Eq. (18-28), we have: $P_C = \frac{2}{\pi}\frac{V_{CC}V_m}{R_L} - \frac{V_m^2}{2R_L}$

At $V_m=0$, $P_C=0$. Also, $P_C=0$ at $V_m = \frac{4V_{CC}}{\pi}$. Since P_C cannot be negative, P_C must increase as V_m increases from 0, and there must exist a maximum for P_C at $\frac{dP_C}{dV_m} = 0 = \frac{2V_{CC}}{\pi R_L} - \frac{V_m}{R_L}$ or at

$V_m = \frac{2V_{CC}}{\pi}$. At this value of V_m, $(P_C)_{max} =$

$$= \frac{2}{\pi}\frac{V_{CC}}{R_L}\frac{2V_{CC}}{\pi} - \frac{4V_{CC}^2}{2\pi^2 R_L} = \frac{2V_{CC}^2}{\pi^2 R_L} \quad \text{[Eq. (18-29)]}.$$

18-6 (a) From Eq. (18-35) $i_L = 2(B_1\cos\omega t + B_3\cos 3\omega t + \ldots)$

$$i_L(\omega t+\pi) = 2[B_1\cos(\omega t+\pi) + B_3\cos(3\omega t+3\pi) + \ldots]$$
$$= -i_L(\omega t)$$

(b) From Eq. (18-33) $i_2(\omega t) = i_1(\omega t+\pi)$

$$i_L(\omega t) = i_1(\omega t) - i_2(\omega t) = i_1(\omega t) - i_1(\omega t+\pi) \qquad (1)$$

$$i_L(\omega t+\pi) = i_1(\omega t+\pi) - i_1(\omega t+2\pi)$$
$$= i_1(\omega t+\pi) - i_1(\omega t) = -i_L(\omega t) \text{ from Eq. (1)}$$

18-7 (a) The peak output signal is V_{CC}, assuming that the voltage across a transistor is zero at the peak output.

$$P = \frac{V_m^2}{2R_L} = \frac{V_{CC}^2}{2R_L} = \frac{(15)^2}{8} = \underline{28.13 \text{ W}}$$

(b) From Eq. (18-26) $P_i = \frac{2I_m V_{CC}}{\pi} = \frac{2V_{CC}^2}{\pi R_L} = \frac{(15)^2}{2\pi}$

$$= 35.81 \text{ W}$$

$P_C = P_i - P = 35.81 - 28.13 = 7.68$ W total or

$P_C = \frac{1}{2}(7.68) = \underline{3.84 \text{ W}}$ per transistor

(c) $\eta = \frac{100P}{P_i} = \frac{2813}{35.81} = \underline{78.55}$ percent

Alternatively, from Eq. (18-27) with $V_m = V_{CC}$

$$\eta = \frac{100\pi}{4} = 78.5 \text{ percent}$$

(d) From Eq. (18-29) $P_{C(max)} = \frac{2V_{CC}^2}{\pi^2 R_L} = \frac{2\times 225}{4\pi^2} =$

$= 11.40$ W total or $\underline{5.70 \text{ W}}$ per transistor.

This occurs at $V_m = \frac{2V_{CC}}{\pi}$ (Prob. 18-5), or

$V_m = \frac{30}{\pi} = 9.55$ V

The output power is $P = \frac{V_m^2}{2R_L} = \frac{(9.55)^2}{8} = 11.40$ W

$$\eta = \frac{P}{P_i} = \frac{P}{P+P_C} = \frac{11.40}{11.40+11.40} = \frac{1}{2} \text{ or } \underline{50 \text{ percent}}$$

This result is independent of V_{CC} and R_L (see Prob. 18-8).

18-8 From Eq. (18-26) $P_i = \frac{2}{\pi}\frac{V_m V_{CC}}{R_L}$

From Prob. (18-5) at $V_m = \frac{2V_{CC}}{\pi}$ and from Eq. (18-27)

$$\eta = \frac{\pi}{4}\frac{V_m}{V_{CC}} = \frac{\pi}{4V_{CC}}\frac{2V_{CC}}{\pi} = \frac{1}{2} \text{ or 50 percent}$$

18-9 (a) For this push-pull circuit if one transistor is ON the other is OFF. Consider first positive input voltages so that Q2 is OFF and Q1 is either ON or OFF. Then

$$v_o = v_i + kV_\gamma - V_\gamma = \sin\omega t + 0.6(k-1)$$

<u>For k = 0</u>, $v_o = \sin\omega t - 0.6$ and Q1 is OFF for $\sin\omega t < 0.6$ The cutin angle θ_1 is given by $\theta_1 = \arcsin 0.6 = \underline{37^\circ}$. The peak output is $1 - 0.6 = 0.4$ V, as indicated in the sketch

<u>For k = 0.5</u> $v_o = \sin\omega t - 0.3$. The cutin angle is $\theta_2 = \arcsin 0.3 = \underline{17.5^\circ}$. The peak output is $1 - 0.3 = 0.7$ V

<u>For k = 1</u>, $v_o = \sin\omega t$ and the cutin angle is $\theta_3 = \underline{0}$.

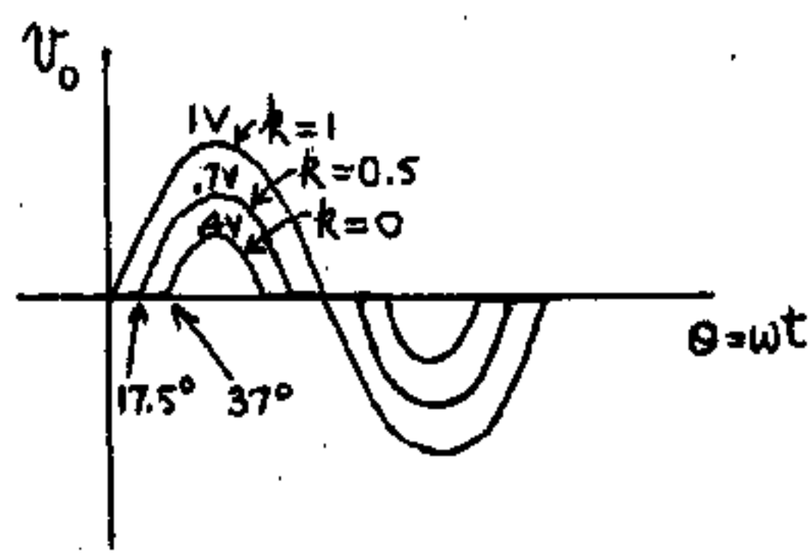

(b) The cutin angle decreases and the peak increases as V_s increases. Hence, the distortion decreases and v_o approaches a perfect sinusoid.

(c) If k exceeds unity, the quiescent base-to-emitter voltage exceeds 0.6 V and the emitter current becomes infinite so that thermal destruction of the transistors results.

(d) With R between the emitters, the quiescent emitter current is

$$I_E = I_{E1} = I_{E2} = \frac{2(kV_\gamma - V_\gamma)}{R}$$

For $k > 1$, $I_E > 0$. The system is thermally stable if I_E does not exceed the rated current.

When signal is applied I_{E1} increases and I_{E2} decreases and I_L (and v_o) increases. The cutin angle is zero and the output is sinusoidal.

(e) For part (a) k = 0 or 0.5; Class C operation (or class B with crossover distortion)

k = 1; Class B operation.

For part (d) Class AB operation (since the quiescent current is not zero).

18-10 (a) Without a heat sink the thermal resistance is

$$\theta_{JC} + \theta_{CA} = \theta_{JA}, \quad T_J = P_D\,\theta_{JA} + T_A$$

$$P_D = \frac{T_J - T_A}{\theta_{JA}} = \frac{200-25}{438} = \underline{0.400\ W}$$

(b) For an infinite mass $\theta_{SA} = 0$ because any amount of heat (power) is absorbed with no change in temperature; that is, the thermal resistance is zero. Since there is no isolation between C and S, $\theta_{CS} = 0$. Hence, from Eq. (18-37)

$$P_D = \frac{T_J - T_A}{\theta_{JC}} = \frac{175}{97} = \underline{1.80\ W}$$

(c) $$P_D = \frac{175}{97+4} = \underline{1.73\ W}$$

18-11 (a) The maximum junction temperature is that of Q2 which dissipates 20 W. From the figure we have

$$175 = 20(2+1) + 30(1.5) + T_A \quad \text{or} \quad T_A = \underline{70°C}$$

(b) $T_{J2} = (10)(2+1) + 30(1.5) + 70 = \underline{145°C}$.

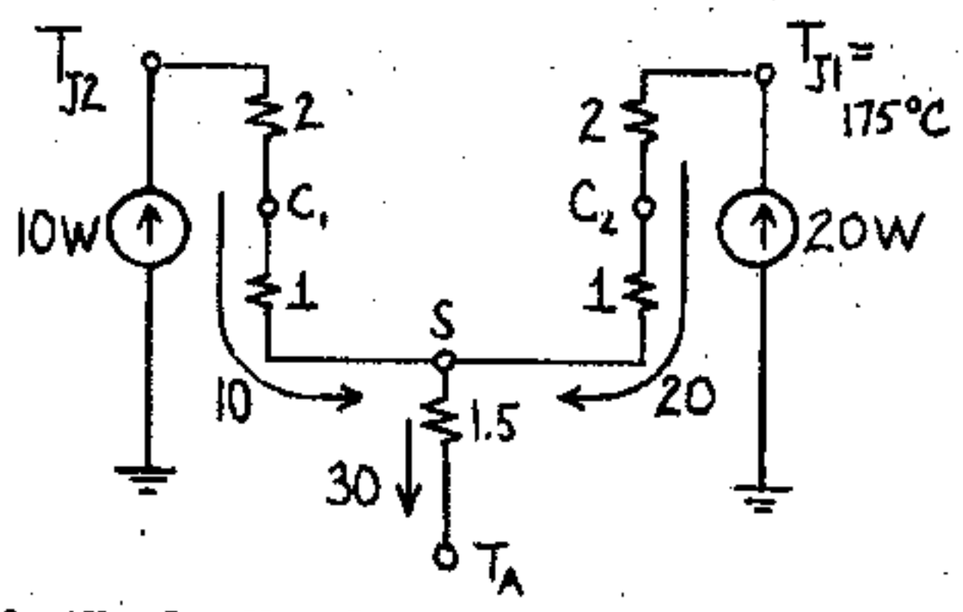

18-12 $$\Delta V_o = S_V \Delta V_{dc} + R_o \Delta I_L + S_T \Delta T \qquad \text{Eq. (18-41)}$$

$$= 3\times10^{-3}\times0.5 + 30\times10^{-3}\times2 + 10^{-3}\times50 = \underline{0.112\ V}$$

Note that it is possible for ΔV_{dc} and R_o to positive while ΔT is negative. Since S_V and R_o are positive and S_T is negative, then the maximum change in V_o is obtained by assuming each term in Eq. (18-41) to be positive.

18-13 (a) From Eq. (18-40) with $\beta A_V = \frac{1}{2}\times10^5 \gg 1$ and $R_1 = R_2$

$$V_O = V_R/\beta = \frac{R_1+R_2}{R_1} V_R = 2 \times 6 = \underline{12\ V}$$

(b) The input offset voltage can be modelled as a voltage source in series with V_R. Hence,

$$S_T = \frac{dV_O}{dT} = \frac{1}{\beta}\frac{dV_{io}}{dT} = 2\times10 = \underline{20\ \mu V/°C}$$

(c) V_{BE1} is reflected into the input of the OP AMP as V_{BE1}/A_V in series with V_R. Since V_{BE} decreases by 2.5 mV per °C (Sec. 3-8) then

$$S_T = \frac{1}{\beta A_V}\frac{dV_{BE1}}{dT} = \frac{-2\times2.5}{10^5}\ mV/°C = \underline{-0.05\ \mu V/°C}$$

18-14 (a) The current in R_1 is V_{REG}/R_1. Hence

$$V_O = V_{REG} + (I_Q + V_{REG}/R_1)R_2 = I_Q R_2 + V_{REG}(1 + R_2/R_1)$$

(b) The voltage between terminals 2 and 3 in Fig. 18-12 is V_{REG}. Because of the virtual short circuit at the OP AMP input terminals, V_{REG} in figure (b) of this problem appears directly across R_1. Neglecting the OP AMP input current,

$$V_O = V_{REG} + (V_{REG}/R_1)R_2 = V_{REG}(1 + R_1/R_2)$$

Note that the circuit in (b) renders V_O independent of the quiescent current I_Q.

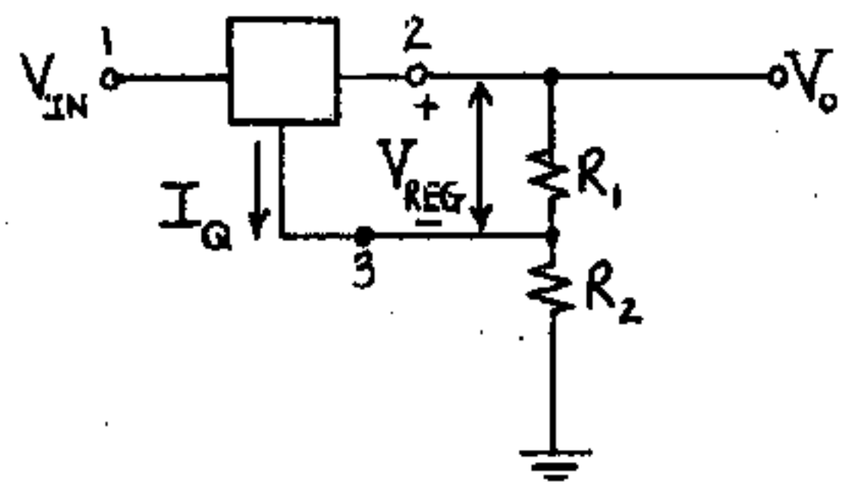

18-15 (a) The current in R is $V_{REG}/R = 5/5 = 1$ A. Hence

$$I_L = 1 + I_Q = 1.01 \text{ A}$$

(b) Use an OP AMP as in circuit (b) of Prob. 18-14, where $R_1 = R$ and R_2 is the load resistor. Then $I_L = V_{REG}/R = 1$ A, independent of I_Q.

18-16 (a) Using superposition, the inverting voltage is

$$V_{REF}\frac{R_2}{R_1 + R_2} + V_O\frac{R_2}{R_1 + R_2}$$

(b) The voltage in (a) equals the noninverting voltage, because of the virtual short circuit of the input.

$$\frac{V_{REF}}{2} = \frac{V_{REF}R_2}{R_1 + R_2} + \frac{V_O R_2}{R_1 + R_2}$$

Solving for V_O we obtain

$$V_O = \frac{1}{2}V_{REF}(1 - R_2/R_1)$$

(c) Solving for R_2/R_1 yields

$$R_2/R_1 = 1 - 2V_O/V_{REF}$$